Second Edition

Gasification

Christopher Higman ~ Maarten van der Burgt

GPP

GASIFICATION

This page intentionally left blank

GASIFICATION

Second Edition

Christopher Higman
and
Maarten van der Burgt

ELSEVIER

AMSTERDAM • BOSTON • HEIDELBERG • LONDON
NEW YORK • OXFORD • PARIS • SAN DIEGO
SAN FRANCISCO • SINGAPORE • SYDNEY • TOKYO

Gulf Professional Publishing is an imprint of Elsevier

GPP

Gulf Professional Publishing is an imprint of Elsevier
30 Corporate Drive, Suite 400, Burlington, MA 01803, USA
Linacre House, Jordan Hill, Oxford OX2 8DP, UK

Second edition 2008

Copyright © 2008 Elsevier Inc. All rights reserved

No part of this publication may be reproduced, stored in a retrieval system or transmitted in any form or by any means electronic, mechanical, photocopying, recording or otherwise without the prior written permission of the publisher

Permissions may be sought directly from Elsevier's Science & Technology Rights Department in Oxford, UK: phone: (+44) 1865 843830, fax: (+44) 1865 853333, E-mail: permissions@elsevier.com. You may also complete your request online via the Elsevier homepage (http://elsevier.com), by selecting "Support & Contact" then "Copyright and Permission" and then "Obtaining Permissions."

Recognizing the importance of preserving what has been written, Elsevier Science prints its books on acid-free paper whenever possible.

Library of Congress Cataloging-in-Publication Data
Higman, Chris.
Gasification / Chris Higman and Maarten van der Burgt.—2nd ed.
p. cm.
Includes bibliographical references and index.
ISBN-13: 978-0-7506-8528-3
ISBN-10: 0-7506-8528-X
1. Coal gasification. I. Burgt, Maarten van der. II. Title.
TP759.H54 2008
665.7′72—dc22

2007048528

British Library Cataloguing-in-Publication Data
A catalogue record for this book is available from the British Library

ISBN: 978-0-7506-8528-3

Typeset by Charon Tec Ltd (A Macmillan Company), Chennai, India
www.charontec.com

For information on all Gulf Professional Publishing publications available, contact our World Wide Web home page at: http://www.gulfpp.com

08 09 10 10 9 8 7 6 5 4 3 2 1

Printed in the United States of America

Working together to grow
libraries in developing countries
www.elsevier.com | www.bookaid.org | www.sabre.org
ELSEVIER BOOK AID International Sabre Foundation

Contents

Notes on the authors, ix
Preface to second edition, xi
Preface to first edition, xiii

1 Introduction, 1
1.1 Historical development of gasification, 1
1.2 Gasification today, 6
References, 9

2 The thermodynamics of gasification, 11
2.1 Reactions, 12
2.2 Thermodynamic modeling of gasification, 16
2.3 Deductions from the thermodynamic model, 20
2.4 Optimizing process conditions, 26
References, 31

3 The kinetics of gasification and reactor theory, 33
3.1 Kinetics, 33
3.2 Reactor theory, 39
3.3 Applications to reactor design, 43
References, 44

4 Feedstocks and feedstock characteristics, 47
4.1 Coals and coke, 47
4.2 Liquid and gaseous feedstocks, 60
4.3 Biomass, 75
4.4 Wastes, 83
References, 87

5 Gasification processes, 91
5.1 Moving-bed processes, 93
5.2 Fluid-bed processes, 104
5.3 Entrained-flow processes, 120
5.4 Oil gasification and partial oxidation of natural gas, 143

5.5 Biomass gasification, 163
5.6 Gasification of wastes, 174
5.7 Black liquor gasification, 178
5.8 Miscellaneous gasification processes, 180
References, 183

6 Practical issues, 193
6.1 Effect of pressure, 193
6.2 Pressurization of coal, 195
6.3 Coal sizing and drying, 206
6.4 Reactor design, 209
6.5 Burners, 215
6.6 Synthesis gas cooling, 216
6.7 Particulate removal, 224
6.8 Process measurement, 226
6.9 Trace components in raw synthesis gas, 232
6.10 Choice of oxidant, 243
6.11 Corrosion aspects, 248
References, 250

7 Applications, 257
7.1 Chemicals, 257
7.2 Synfuels, 278
7.3 Power, 286
References, 318

8 Auxiliary technologies, 323
8.1 Oxygen supply, 323
8.2 Synthesis gas treating, 328
8.3 Catalytic gas conditioning, 348
8.4 Cryogenic gas treatment, 354
8.5 Sulfur recovery, 357
References, 365

9 Economics, environmental and safety issues, 369
9.1 Economics, 369
9.2 Environmental issues, 377
9.3 Safety, 389
References, 393

10 Gasification and the future, 397
References, 399

Appendix A Companion website, 401
Appendix B Conversion factors, 403
Appendix C Emissions conversions, 409
Appendix D Guidelines for reporting operating statistics for gasification facilities, 411
Appendix E Basis for calculations, 415
Nomenclature, 417
List of names and abbreviations, 419
Index, 423

This page intentionally left blank

Notes on the Authors

Christopher Higman is an independent consultant specializing in gasification and other syngas technologies. He was with Lurgi for over 25 years, and was responsible for the design and start-up of a number of ammonia and methanol plants based on the gasification of heavy residues. He has been a visiting lecturer at the College of Petroleum Studies in Oxford. He is associated with the Engler-Bunte-Institute, Karlsruhe.

Maarten J. van der Burgt is an independent consultant in the energy field. During his career of over 30 years with Shell, he was involved in the development of coal gasification and Fischer-Tropsch synthesis processes. He has given seminars at Princeton University, and been an editor of the journal *Fuel*. In 1993, he was awarded the Dow Chemical Energy Prize.

This page intentionally left blank

Preface to Second Edition

The original idea for the first edition of this book grew out of an email exchange between the authors at the end of the year 2000. At that time neither of us had any idea of the growth in interest in gasification that would take place by 2007. In fact it was not even obvious in 2003, when the first edition appeared – even if we were both convinced that it would come some day. This growth of interest can be measured by the astonishing increase in attendance at the annual conferences organized by EPRI and the Gasification Technologies Council. At the 2003 conference in San Francisco, where we first presented this book, there were about 350 attendees. In 2006, the number was close to 1000.

Important events contributing to this interest include the following:

- There has been an increasing awareness of "greenhouse gas" issues and the role that gasification can play in CO_2 reduction strategies.
- The crude oil price has leapt from the $20–30 range to around $60–70 per barrel and higher raising the interest in all forms of coal-based technologies for energy conversion.

Reactions to these events have included the following:

- The passing of the US Energy Policy Act of 2005, providing for large incentives to gasification projects in the power industry, which offer the possibility of being retrofitted for CO_2 capture (CO_2 capture ready), and also in the industrial sector.
- Major US utilities such as AEP, Duke Energy and Southern Company have announced large gasification-based IGCC power plants.
- The oil major BP has announced two Carbon Capture and Storage (CCS) projects to utilize the CO_2 for Enhanced Oil Recovery (EOR), one in Europe and one in the US, with others to follow.
- Interest has being growing in other parts of the world, such as China, India and Australia, with each of these countries developing gasification processes tailored to the specific needs of their own national coal resources.
- Interest in gas-to-liquids operations has extended to coal-to-liquids. A number of such projects have also been announced.

It was against this background that we decided that an update of *Gasification* would be appropriate. In particular, we wanted to do the following:

- Provide more detail on the integration issues for current generation, state-of-the-art IGCCs
- Discuss details of CO_2 capture in the IGCC context, addressing the issues of pre-investment and retrofitting, as well as defining what the term "CO_2 capture ready" might mean in practice
- Update data on plant reliability, availability and maintainability (RAM), including an evaluation of feedback from existing plants
- Include an update of all statistics, processes and projects, including descriptions of a number of processes not covered in the previous edition.

None of this will make the second edition into a radically new book; rather, the growth in interest in the subject will of necessity draw in many new people who could do with an up-to-date resource in a rapidly developing field.

We would like to thank all those who have provided feedback and comments, especially those who have pointed out errors, many of which have been posted on the *errata* slip on the website. Dave Heaven, in particular, made many helpful suggestions. We are grateful for the continued encouragement from the industry; in particular from Gary Stiegel of the US Department of Energy, Jim Childress of the Gasification Technologies Council, and Doug Todd, who gave one of us a great tutorial on gas turbines but who is not responsible for what we have made of it. Finally, we give renewed thanks to our wives, who continue to support our activities in the gasification field, despite the absences from home that these sometimes require.

Chris Higman and Maarten van der Burgt
July 2007

Preface to First Edition

Gasification, at least of coal, is in one sense an old technology, having formed the heart of the town gas industry until the widespread introduction of natural gas. With the decline of the town gas industry, gasification became a specialized, niche technology with limited application. After substantial technical development, gasification is now enjoying a considerable renaissance. This is documented by the more than 30 projects that are in various stages of planning or completion at the present time. The reasons for this include the development of new applications such as gas-to-liquids (Fischer-Tropsch) projects, the prospect of increased efficiency and environmental performance including CO_2 capture through the use of Integrated Gasification Combined-Cycle (IGCC) in the power industry, as well as the search for an environmentally benign technology to process low-value or waste feedstocks such as refinery residues, petroleum coke, or biomass or municipal waste.

The literature of gasification is extremely fragmented, with almost all recent (post-1990) contributions being confined to conference papers or articles in the appropriate journals. In the coal literature it is mostly relegated to a single chapter, which is unable to do the subject proper justice.

The knowledge of the subject is mostly confined to commercial process licensors and the operators of existing plants. There is therefore little opportunity for outsiders to acquire an independent overview before embarking on a project of their own.

In discussing these issues between ourselves, we concluded that there was a need for a book that collected and collated the vast amount of information available in the public domain, and provided a "single point-of-entry" to the field of gasification without necessarily answering all the questions that might arise. In fact, we felt that the most important task is to communicate an understanding for the questions to ask in a given situation. This book may supply some of those answers directly; others will require further follow-up. This approach is no doubt colored by our own professional experience, where the very flexibility of gasification technology, with its differing feedstocks, differing end products, differing economic situations and the continual development has inevitably led to project-specific solutions for certain issues. Individual solutions will, we believe, continue to prevail in gasification technology, rather than a global standard after Henry Ford's philosophy of "any color they want, so long as it's black". For gasification, standardization, which is certainly an indispensable requisite to its economic competitiveness, must, in our opinion, first of all be introduced as a structuralized approach to the issues to be faced. And in

developing this book, we have aimed at providing a structure that we hope can help in this process.

We trust that in doing so we can be of assistance to a broad audience, including:

- Staff of companies who might want to build a plant and need to acquire know-how quickly in a compact form but independent of process licensors
- Engineers or potential project financiers or insurers wanting to have an understanding of the technical risks involved in such a project, or those working for government departments and agencies involved in the licensing and permitting of gasification projects
- People in the power industry who otherwise have little access to data on the subject of gasification
- Established workers in the field looking for a reference work with a broad theoretical and practical overview
- University students needing a book that combines the elements of academic theory and industrial practice.

After a brief historical introduction to gasification and its relevance to the development of our modern technological society in Chapter 1, there follow two chapters of theory. In order to have a good understanding of the practicalities of gasification, it is necessary to have a sufficient theoretical background. Chemical engineers will have this anyway, but many project engineers who become involved in gasification projects may have an educational background in mechanical or some other branch of engineering, and for such readers a brief summary is sure to be of use. The main emphasis of Chapter 2 is on thermodynamics, since this is sufficient for understanding and calculating the results of synthesis gas generation processes. But the development of computational fluid dynamics is beginning to make kinetics accessible in a manner hardly thinkable 20 years ago, so we have included a basic treatment of kinetic aspects of gasification in Chapter 3.

Chapter 4 reviews the wide variety of feedstocks that can be gasified, ranging from coal, through oils and gas to biomass and waste. It discusses their properties as these affect both the gasification process itself and the downstream synthesis gas treatment and end usage.

The heart of the book lies in Chapters 5, 6 and 7. Chapter 5 discusses actual processes. The emphasis is on processes in commercial use today, such as those of Shell, GE, Lurgi, Siemens, and others such as the circulating fluid-bed processes of Foster Wheeler and Lurgi. It includes brief mentions of some of the important forerunner processes, such as Winkler and Koppers-Totzek. A number of promising new processes, such as the Japanese MHI and EAGLE gasifiers, are also handled.

Chapter 6 looks at a broad selection of practical issues, including the drying and pressurizing of coal, syngas cooling and particulate removal, equipment issues, process control, trace components in synthesis gas, choice of oxidant, and corrosion aspects.

Typical applications are reviewed in Chapter 7. These include the production of chemicals ranging from ammonia and methanol through hydrogen to carbon monoxide, and synthesis gas for the production of oxo-alcohols. The section on synfuels production covers gas-to-liquids (GTL) and Substitute Natural Gas (SNG). The discussion on power applications includes state-of-the-art IGCCs, as well as a look at the potential for increasing efficiency with advanced cycles.

No gasification plant stands alone. Most processes require a source of oxygen, and the product synthesis gas needs treating and conditioning before it can be used. The principle auxiliary technologies for these tasks and the principal issues surrounding their selection are discussed in Chapter 8.

Every project stands or falls on its economics. Gasification is no exception, and economic aspects are addressed in Chapter 9. This chapter also looks at the environmental impact of gasification, particularly its superior performance in power generation. Its innate ability to provide a means of CO_2 capture with only minor additional cost is an important aspect of this subject. This chapter also addresses those safety issues that can be considered specific to the technology.

By way of an epilogue, we have tried to look into the crystal ball, to see what part gasification can play in our futures. We discuss the potential contribution that gasification of fossil fuels can make to the transition to a hydrogen economy. Even in an ideal "fully sustainable" world, gasification of biomass may help us in the provision of some of the petrochemical products we so take for granted today.

At a number of different points in the text we have deliberately questioned current practice or thinking. We hope that the one or other idea produced may stimulate others and help further the technology as a whole.

COMPANION WEBSITE

As an accompaniment to this book we have built a website (www.gasification.higman.de), which includes a number of computer programs arising out of the work involved in preparing this book. They include a complete gasification calculation based on the content of Chapter 2, and also a literature databank with keyword search capability.

TERMINOLOGY

A preliminary word on terminology may be in order. Gasification has a place in many industries, each with its own specific linguistic tradition. Recognizing this, we have not tried to impose our own language on the reader, but have used whatever synonym appears appropriate to the context. Thus the words fuel, feed and feedstock are used interchangeably without any attempt to distinguish between them. Similarly, oxidant, blast, or gasification agent are used with the same meaning in different places.

We would like to thank all our friends in the industry who have helped and encouraged us in this project, in particular Neville Holt of EPRI, Dale Simbeck of SFA Pacific and Rainer Reimert of Universität Karlsruhe. We would also like to thank Nuon Power Buggenum and Hydro Agri Brunsbüttel (now Yara) for the use of the cover photographs. A complete list would be too long to include at this point, but most will find their names somewhere in the bibliography, and we ask them to accept that as a personal thank you. Chris would also like to thank Lurgi for the time and opportunity to research and write this book. We would both like to thank our extremely tolerant wives, Pip and Agatha, who have accompanied us through our careers and this book, and who have meanwhile come to know quite a lot about the subject too.

Finally, we hope that this book will contribute to the development of a better understanding of gasification processes and their future development. If it is of use to those developing new gasification projects, then it will have achieved its aim.

Chris Higman and Maarten van der Burgt
January 2003

Chapter 1

Introduction

The manufacture of combustible gases from solid fuels is an ancient art, but by no means a forgotten one. In its widest sense, the term *gasification* covers the conversion of any carbonaceous fuel to a gaseous product with a useable heating value. This definition excludes combustion, because the product flue gas has no residual heating value. It does include the technologies of pyrolysis, partial oxidation, and hydrogenation. Early technologies depended heavily on pyrolysis (i.e. the application of heat to the feedstock in the absence of oxygen), but this is of less importance in gas production today. The dominant technology is partial oxidation, which produces synthesis gas (otherwise known as syngas) consisting of hydrogen and carbon monoxide in varying ratios, whereby the oxidant may be pure oxygen, air and/or steam. Partial oxidation can be applied to solid, liquid and gaseous feedstocks such as coals, residual oils, and natural gas and, despite the tautology involved in "gas gasification", the latter also finds an important place in this book. We do not, however, attempt to extend the meaning of gasification to include catalytic processes such as steam reforming or catalytic partial oxidation. These technologies are a specialist field in their own right. Although we recognize that pyrolysis does take place as a fast intermediate step in most modern processes, it is in the sense of partial oxidation that we will interpret the word *gasification*, and the two terms will be used interchangeably. Hydrogenation has only found an intermittent interest in the development of gasification technologies, and where we discuss it we will always use the specific terms *hydro-gasification* or *hydrogenating gasification*.

1.1 HISTORICAL DEVELOPMENT OF GASIFICATION

The development of human history is closely related to fire and therefore also to fuels. This relationship between humankind, fire and earth was already documented in the myth of Prometheus, who stole fire from the gods to give it to man. Prometheus was condemned for his revelation of divine secrets and bound to earth as a punishment. When we add to fire and earth the air that we need to make fire and the water to

keep it under control, we have the four Greek elements that play such an important role in the technology of fuels and for that matter in gasification.

The first fuel used by humans was wood, and this fuel is still used today by millions of people to cook their meals and to heat their homes. But wood was and is also used for building and, in the form of charcoal, for industrial processes such as ore reduction. In densely populated areas of the world this led to a shortage of wood, with sometimes dramatic results. It was such a shortage of wood that caused iron production in England to drop from 180,000 to 18,000 tons per year in the period 1620–1720. The solution – which in hindsight is obvious – was coal.

Although the production of coal had already been known for a long time, it was only in the second half of the eighteenth century that coal production really took hold, not surprisingly starting in the home of the Industrial Revolution – England. The coke oven was developed initially for the metallurgical industry to provide coke as a substitute for charcoal. Only towards the end of the eighteenth century was gas produced from coal by pyrolysis on a somewhat larger scale. With the foundation in 1812 of the London Gas, Light and Coke Company, gasification finally became a commercial process. Ever since, gasification has played a major role in industrial development.

The most important gaseous fuel used in the first century of industrial development was town gas. This was produced by two processes: pyrolysis, in which discontinuously operating ovens produce coke and a gas with a relatively high heating value (20,000–23,000 kJ/m^3) and the water gas process, in which coke is converted into a mixture of hydrogen and carbon monoxide by another discontinuous method (approximately 12,000 kJ/m^3, or medium Btu gas).

The first application of industrial gas was illumination. This was followed by heating, then as a raw material for the chemical industry and, more recently, for electric power generation. Initially the town gas produced by gasification was expensive, so most people used it only for lighting and cooking. In these applications it had the clearest advantages over the alternatives – candles and coal. But around 1900 electric bulbs replaced gas as a source of light. Only later, with increasing prosperity in the twentieth century, did gas gain a significant place in the market for space heating. The use of coal, and town gas generated from coal, for space heating only came to an end – often after a short intermezzo where heating oil was used – with the advent of cheap natural gas. However, it should be noted that town gas had paved the way to the success of the latter in domestic use, since people were already used to gas in their homes; otherwise, there might have been considerable concern about safety aspects such as the danger of explosions.

A drawback of town gas was that the heating value was relatively low, and it could not, therefore, be transported over large distances economically. In relation to this problem it is observed that the development of the steam engine and many industrial processes such as gasification would not have been possible without the parallel development of metal tubes and steam drums. This stresses the importance of suitable equipment for the development of both physical and chemical processes. Problems with producing gas-tight equipment were the main reason why the

early production processes, coke ovens and water gas reactors as well as the transport and storage were carried out at low pressures of less than 2 bar. This resulted in relatively voluminous equipment to which the gasholders that were required to cope with variations in demand still bear witness in many of the cities of the industrialized world.

Until the end of the 1920s, the only gases that could be produced in a continuous process were blast furnace gas and producer gas. Producer gas was obtained by partial oxidation of coke with humidified air. However, both gases have a low heating value (3500–6000 kJ/m³, or low Btu gas) and could therefore only be used in the vicinity of their production.

The success of the production of gases by partial oxidation cannot only be attributed to the fact that gas is easier to handle than a solid fuel. There is also a more basic chemical reason that can best be illustrated by the following reactions:

$$C + \tfrac{1}{2}O_2 = CO \qquad -111\ \text{MJ/Kmol} \tag{1.1}$$

$$CO + \tfrac{1}{2}O_2 = CO_2 \qquad -283\ \text{MJ/Kmol} \tag{1.2}$$

$$C + O_2 = CO_2 \qquad -394\ \text{MJ/Kmol} \tag{1.3}$$

These reactions show that by "investing" 28% of the heating value of pure carbon in the conversion of the solid carbon into the gas CO, 72% of the heating value of the carbon is conserved in the gas. In practice, the fuel will contain not only carbon but also some hydrogen, and the percentage of the heat in the original fuel which becomes available in the gas is, in modern processes, generally between 75 and 88%. Were this value only 50% or lower, gasification would probably never have become such a commercially successful process.

Although gasification started as a source for lighting and heating, from 1900 onwards the water gas process, which produced a gas consisting of about equal amounts of hydrogen and carbon monoxide, also started to become important for the chemical industry. The endothermic water gas reaction can be written as:

$$C + H_2O \leftrightarrows CO + H_2 \qquad +131\ \text{MJ/Kmol} \tag{1.4}$$

By converting part or all of the carbon monoxide into hydrogen following the CO shift reaction,

$$CO + H_2O \leftrightarrows H_2 + CO_2 \qquad -41\ \text{MJ/Kmol} \tag{1.5}$$

it became possible to convert the water gas into hydrogen or synthesis gas (a mixture of H_2 and CO) for ammonia and methanol synthesis respectively. Other applications of synthesis gas are for Fischer-Tropsch synthesis of hydrocarbons, and for the synthesis of acetic acid anhydride.

It was only after Carl von Linde commercialized the cryogenic separation of air during the 1920s that fully continuous gasification processes using an oxygen blast became available for the production of synthesis gas and hydrogen. This was the time of the development of some of the important processes that were the forerunners of many of today's units: the Winkler fluid-bed process (1926), the Lurgi moving-bed pressurized gasification process (1931) and the Koppers-Totzek entrained-flow process (1940s).

With the establishment of these processes, little further technological progress in the gasification of solid fuels took place over the following 40 years. Nonetheless, capacity with these new technologies expanded steadily, playing their role partly in Germany's wartime synthetic fuels program and on a wider basis in the worldwide development of the ammonia industry.

This period also saw the foundation of the South African Coal, Oil, and Gas Corporation, known today as Sasol. This plant uses coal gasification and Fischer-Tropsch synthesis as the basis of its synfuels complex and an extensive petrochemical industry. With the extensions made in the late 1970s, Sasol is the largest gasification center in the world.

With the advent of plentiful quantities of natural gas and naphtha in the 1950s, the importance of coal gasification declined. The need for synthesis gas, however, did not. On the contrary, the demand for ammonia as a nitrogenous fertilizer grew exponentially – a development that could only be satisfied by the wide-scale introduction of steam reforming of natural gas and naphtha. The scale of this development, both in total capacity as well as in plant size, can be judged by the figures in Table 1.1. Similar, if not quite so spectacular, developments took place in hydrogen and methanol production.

Table 1.1
Development of ammonia production capacity 1945–1969

Year	World ammonia production (MMt/y)	Maximum converter size (t/d)
1945	5.5	100
1960	14.5	250
1964	23.0	600
1969	54.0	1400

Source: Slack and James, 1973.

Steam reforming is not usually considered to come under the heading of gasification. The reforming reaction (allowing for the difference in fuel) is similar to the water gas reaction.

$$CH_4 + H_2O \leftrightarrows 3H_2 + CO \qquad +206\ \text{MJ/Kmol} \tag{1.6}$$

The heat for this endothermic reaction is obtained by the combustion of additional natural gas:

$$CH_4 + 2O_2 = CO_2 + 2H_2O \qquad -803 \text{ MJ/Kmol} \tag{1.7}$$

Unlike gasification processes, these reactions take place in spaces physically separated by the reformer tube.

An important part of the ammonia story was the development of the secondary reformer in which unconverted methane is processed into synthesis gas by partial oxidation over a reforming catalyst.

$$CH_4 + \tfrac{1}{2}O_2 = CO + 2H_2 \qquad -36 \text{ MJ/Kmol} \tag{1.8}$$

The use of air as oxidant brought the necessary nitrogen into the system for the ammonia synthesis. A number of such plants were also built with pure oxygen as oxidant. These technologies have usually gone under the name of *autothermal reforming* or *catalytic partial oxidation*.

The 1950s was also the time in which both the Texaco (later GE) and the Shell oil gasification processes were developed. Though far less widely used than steam reforming for ammonia production, they were also able to satisfy a demand where natural gas or naphtha was in short supply.

Then, in the early 1970s, the first oil crisis arrived and, together with a perceived potential shortage of natural gas, it served to revive the interest in coal gasification as an important process for the production of liquid and gaseous fuels. Considerable investment was made in the development of new technologies. Much of this effort went into coal hydrogenation both for direct liquefaction and also for so-called hydro-gasification. The latter aimed at hydrogenating coal directly to methane as a substitute natural gas (SNG). Although a number of processes reached the demonstration plant stage (Speich, 1981), the thermodynamics of the process dictate a high-pressure operation, and this contributed to the lack of commercial success of hydro-gasification processes. In fact, the only SNG plant to be built in these years was based on classical oxygen-blown moving-bed gasification technology to provide synthesis gas for a subsequent methanation step (Dittus and Johnson, 2001).

The general investment climate in fuels technology did lead to further development of the older process. Lurgi developed a slagging version of its existing technology in a partnership with British Gas (BGL) (Brooks *et al.*, 1984). Koppers and Shell joined forces to produce a pressurized version of the Koppers-Totzek gasifier (for a time marketed separately as Prenflo and Shell Coal Gasification Process (SCGP) respectively) (van der Burgt, 1978). Rheinbraun developed the High Temperature Winkler (HTW) fluidized-bed process (Speich, 1981), and Texaco extended its oil gasification process to accept a slurried coal feed (Schlinger, 1984).

However, the 1980s then saw a renewed glut of oil that reduced the interest in coal gasification and liquefaction; as a result, most of these developments had to wait a further decade or so before getting past the demonstration plant stage.

1.2 GASIFICATION TODAY

The last 10–15 years have seen the start of a renaissance of gasification technology, as is clear from Figure 1.1. There are several different reasons for this, but first and foremost is the dramatic increase in energy costs. While for the 20 years prior to 2003 the oil price had lain between 20 and 30 US$/bbl, prices since 2005 have mostly been in the 55–70 US$/bbl range. Similarly with natural gas, the US commercial price from 1983 to 2003 lay mostly between 5 and 6 US$/MMBtu, rising slightly toward the end of the period; since 2005 it has remained consistently over 10 US$/MMBtu, peaking at 15$ at the end of 2005. The perception that these are long-term trends caused by the rapid industrialization and increase in energy demand in countries such as China and India has caused people to look at coal as an alternative source of energy – particularly in view of its wider availability.

Gasification of coal provides a means of generating a wide range of products, power, chemicals, substitute natural gas (SNG) and transport fuels. The distribution of gasification capacity according to application is shown in Figure 1.2.

Electricity generation has emerged as a large new market for these developments, since gasification is seen as a means of enhancing the environmental acceptability of coal, as well as of increasing the overall efficiency of the conversion of the chemical energy in the coal into electricity. The idea of using synthesis gas as a fuel

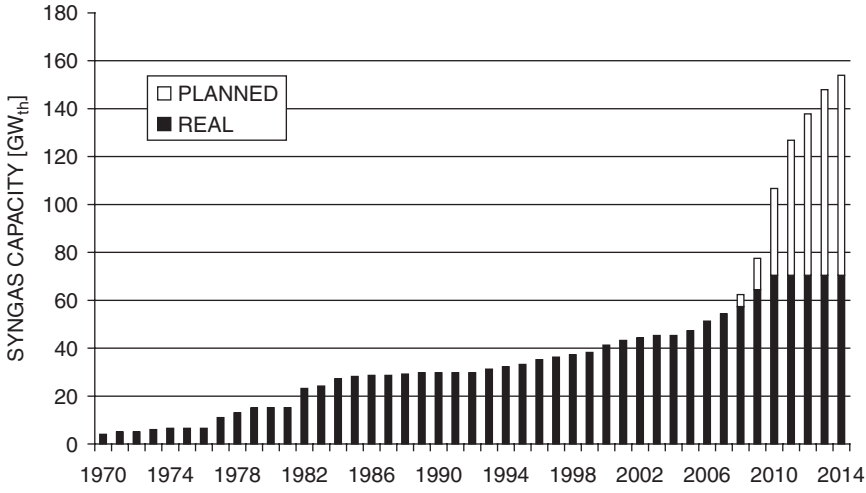

Figure 1.1 Cumulative worldwide gasification capacity (source: Simbeck, 2007).

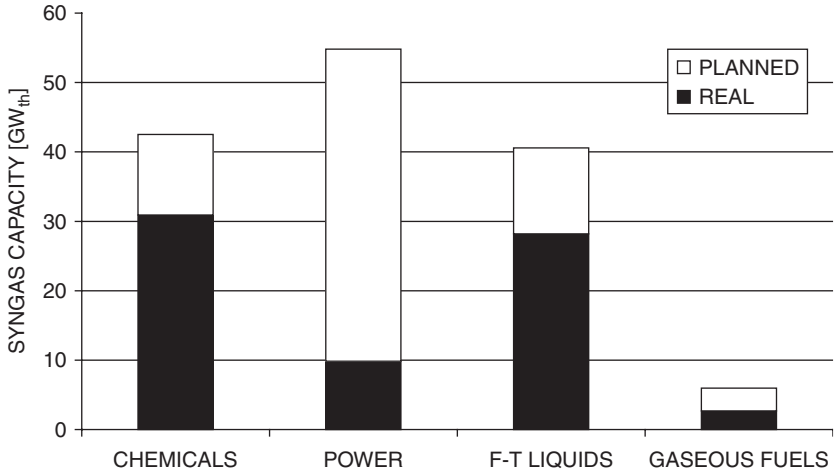

Figure 1.2 Worldwide gasification capacity by product (source: Simbeck, 2007).

for gas turbines is not new. Gumz (1950) made such a proposal with an anticipated gas turbine inlet temperature of 700°C, and it has largely been the development of gas turbine technology with inlet temperatures now of 1400°C or more that has brought this application into the realm of reality. Prototype plants were built in the USA (Cool Water, 100 MW_e, start-up 1984, and Plaquemine, 165 MW_e, 1987) and in Europe (Lünen, 170 MW_e, 1972). Four larger demonstration plants followed during the 1990s (Buggenum, 250 MW_e, 1994; Wabash River, 250 MW_e, 1995; Polk, 250 MW_e, 1996; and Puertollano, 300 MW_e, 1998). These plants have now been operating for 10 years or more, after an initial demonstration phase in a commercial setting. Considerable experience and a long list of "lessons learned" have been accumulated, which should provide a good basis for the next generation of plants.

Interest in IGCC in the US power industry started to appear in 2003, and this was strengthened by the acquisition of Texaco's gasification technology by GE Energy (GEE) in 2004, which generated confidence in the possibility of an "overall wrap" for an integrated coal-in power-out plant supply arrangement. GEE then entered into an alliance with Bechtel (constructors of both Cool Water and Polk) to develop a largely standardized 630 MW_e IGCC reference plant based on two GE 7FB gas turbines. This initiative was followed by other alliances, including a ConocoPhillips–Fluor–Siemens alliance, which also began work on a 630 MW_e reference plant. These reference plants have provided a basis for several projects now in various stages of development, which include plants in Ohio and West Virginia for American Electric Power, one in Indiana for Duke Energy and one in Minnesota for Excelsior Energy. The front end engineering design (FEED) has been completed for these projects, and they are all in various stages of permitting. At the same time, Southern Company has started on a 285 MW_e demonstration project for the KBR Transport reactor technology in Orlando. Other projects are also in various stages of

development. These include 750 MW_e IGCC capacity in The Netherlands by Nuon, owners of Buggenum, and 630 MW_e by Tampa Electric, owners of Polk.

Coal-to-chemicals is another area that has recently received more attention. In this field the Eastman methanol plant in Kingsport, started up in 1984, was and remains a leader. At the same time, Ube in Japan began with coal (and later petroleum coke)-to-ammonia. This foreshadowed not only the Coffeyville coke-based ammonia plant in the United States, but also many such plants in China. Coal-based fertilizer plants in China exist with many of the major gasification technologies – Lurgi, GE Energy, Shell and, more recently, the homegrown OMB process. Other plants in China are under construction for methanol, DME and olefins (via methanol).

For many years the Dakota gasification plant in Beula was an isolated example of the fact that with gasification technology, substitute natural gas can also be made. In the meantime, the increase in gas prices referred to above has made this idea much more attractive, and a number of projects in the US are being studied – although none has yet reached the construction phase.

A further development, which appeared during the 1990s, was an upsurge in gasification of heavy oil residues in refineries. Oil refineries are under both an economic pressure to move their product slate towards lighter products and a legislative pressure to reduce sulfur emissions, both in the production process as well as in the products themselves. Much of the residue had been used as a heavy fuel oil, in the refinery itself, as marine bunker fuel or in power stations. Residue gasification has now become one of the essential tools in addressing these issues. Although heavy residues have a low hydrogen content, they can be converted into hydrogen by gasification. The hydrogen is used to hydrocrack other heavy fractions in order to produce lighter products such as gasoline, kerosene and automotive diesel. At the same time sulfur is removed in the refinery, thus reducing the sulfur present in the final products (Higman and Heurich, 1993). In Italy, a country particularly dependent on oil for power generation, four refineries have introduced gasification technology as a means of desulfurizing heavy fuel oil and producing electric power, two with a capacity of 500 MW_e and one with a capacity of 250 MW_e. Hydrogen production is incorporated into the overall scheme. A similar plant was realized in Shell's Pernis refinery in The Netherlands to generate 285 t/d hydrogen and 115 MW_e. Other European refineries have similar projects in the planning phase.

More recently, the high price of crude oil has increased interest in the Canadian oil sands, and gasification is playing a role in their development. Residue from the upgrading process is gasified as a source of hydrogen, fuel gas and steam. The first plant for this application is Opti Canada's Long Lake project, which is due to go on stream in 2008. Other projects are in various stages of design and construction.

An additional driving force for the increase in partial oxidation is the development of "gas-to-liquids" (GTL) projects. For transport, liquid fuels have an undoubted advantage. They are easy to handle and have a high energy density. For the consumer, this translates into a motorcar that can travel nearly 1000 km on 50 liters of fuel – a range performance as yet unmatched by any of the proposed alternatives. For the energy company, the prospect of creating synthetic liquid fuels

provides a means of bringing remote, or "stranded", natural gas to the marketplace using existing infrastructure. Gasification has an important role to play in this scenario. The Shell Middle Distillate Synthesis (SMDS) plant in Bintulu, Malaysia, producing some 12,000 bbl/d of liquid hydrocarbons, was only the first of a number of projects currently in various stages of planning and engineering around the world (van der Burgt, 1988). In Qatar, Sasol's 34,000 bbl/d Oryx plant, which uses autothermal reforming for syngas generation, has started shipping product. The first phase of Shell's 140,000 bbl/d Pearl project, also in Qatar, which uses partial oxidation for syngas generation, is now under construction.

In addition to GTL, coal-to-liquids (CTL) is also generating interest in the United States and in China. The economics of these projects are, however, more challenging than those for GTL, and it remains to be seen how these develop.

All in all, these are just some of the reasons or representative examples why the interest in gasification technology has grown so much in the last few years, and this growth is likely to continue for some time to come.

REFERENCES

Brooks, C.T., Stroud, H.J.F. and Tart, K.R. (1984). British Gas/Lurgi slagging gasifier. In: R.A. Meyers (ed.), *Handbook of Synfuels Technology*. New York: McGraw-Hill.

Dittus, M. and Johnson, D. (2001). "The hidden value of lignite coal". Paper presented at Gasification Technologies Conference, San Francisco.

Gumz, W. (1950). *Gas Producers and Blast Furnaces*. New York: John Wiley & Sons.

Higman, C.A.A. and Heurich, H. (1993). "Partial oxidation in the refinery hydrogen management scheme". Paper presented at AIChE Spring Meeting, Houston.

Schlinger, W.G. (1984). The Texaco coal gasification process. In: R.A. Meyers (ed.), *Handbook of Synfuels Technology*. New York: McGraw-Hill.

Simbeck, D. (2007). "Gasification opportunities in Alberta". Paper presented at Seminar on Gasification Technologies sponsored by Alberta Government and GTC, Edmonton.

Slack, A.V. and James, G.R. (1973). *Ammonia, Part I*. New York: Marcel Decker.

Speich, P. (1981). Braunkohle – auf dem Weg zur großtechnischen Veredelung. *VIK-Mitteilungen*, 3/4.

US Department of Energy (1978). *Gasification Database* (available at http://www.netl.doe.gov/technologies/coalpower/gasification/database/database.html, retrieved 3 June, 2007).

van der Burgt, M.J. (1978). "Technical and economic aspects of Shell-Koppers coal gasification process". Paper presented at AIChE Meeting, Anaheim, California.

van der Burgt, M.J. (1988). "Shell's middle distillate synthesis process". Paper presented at AIChE Meeting New Orleans.

This page intentionally left blank

Chapter 2

The Thermodynamics of Gasification

In Chapter 1 we defined gasification as the production of gases with a useable heating value from carbonaceous fuels. The range of potential fuels, from coal and oil to biomass and wastes, would appear to make the task of presenting a theory valid for all these feeds relatively complex.

Nonetheless, the predominant phenomena of pyrolysis or devolatilization followed by gasification of the remaining char are similar for the full range of feedstocks. In developing gasification theory it is therefore permissible to concentrate on the "simple" case of gasification of pure carbon, as most authors do, and discuss the influence of specific feed characteristics separately. In this work we will also be adopting this approach, which can also be used for the partial oxidation of gases such as natural gas.

In the discussion of the theoretical background to any chemical process, it is necessary to examine both the thermodynamics (i.e. the state to which the process will move under specific conditions of pressure and temperature, given sufficient time) and the kinetics (i.e. what route will it take and how fast will it get there).

The gasification process takes place at temperatures in the range 800°C to 1800°C. The exact temperature depends on the characteristics of the feedstock, in particular the softening and melting temperatures of the ash, as is explained in more detail in Chapter 5 (page 93). However, over the whole temperature range described above, the reaction rates are sufficiently high that modeling on the basis of the thermodynamic equilibrium of the main gaseous components and carbon (which we will assume for the present to be graphite) gives results that are close enough to reality that they form the basis of most commercial reactor designs. This applies unconditionally for all entrained-flow slagging gasifiers, and may also be applied to most fluid-bed gasifiers and even to moving-bed gasifiers, provided the latter use coke as a feedstock.

One exception to the above assumption that one can model with thermodynamic equilibria alone is the moving-bed gasifier, where coal is used as a feedstock and where the blast (oxygen and steam) moves counter-currently to the coal as, for

example, in the Lurgi gasifier, which is described in further detail in section 5.1. In such gasifiers pyrolysis reactions are prevalent in the colder, upper part of the gasifier reactor, and therefore a simple description of the process by assuming thermodynamic equilibrium is not allowable for that region of the reactor. The reactions in the hot bottom section where coke reacts with the blast can, however, be described well by thermodynamic equilibrium. A second exception is the gasification of biomass at temperatures of about 850°C (Kersten, 2002).

In this discussion of the theory of gasification, the emphasis will be limited to gasifiers that operate at temperatures of 850°C and higher. Below 850°C is, on the one hand, the realm of pyrolysis reactions, which are extremely complex to model, whereas on the other hand, the partial oxidation reactions proceed at so slow a rate that they become of little practical value.

2.1 REACTIONS

During the process of gasification of solid carbon, whether in the form of coal, coke or char, the principle chemical reactions are those involving carbon, carbon monoxide, carbon dioxide, hydrogen, water (or steam) and methane. These are:

combustion reactions,

$$C + \tfrac{1}{2}O_2 = CO \qquad -111 \text{ MJ/Kmol} \tag{2.1}$$

$$CO + \tfrac{1}{2}O_2 = CO_2 \qquad -283 \text{ MJ/Kmol} \tag{2.2}$$

$$H_2 + \tfrac{1}{2}O_2 = H_2O \qquad -242 \text{ MJ/Kmol} \tag{2.3}$$

the Boudouard reaction,

$$C + CO_2 \leftrightarrows 2CO \qquad +172 \text{ MJ/kmol} \tag{2.4}$$

the water gas reaction,

$$C + H_2O \leftrightarrows CO + H_2 \qquad +131 \text{ MJ/kmol} \tag{2.5}$$

and the methanation reaction,

$$C + 2H_2 \leftrightarrows CH_4 \qquad -75 \text{ MJ/kmol} \tag{2.6}$$

As reactions with free oxygen are all essentially complete under gasification conditions, reactions (2.1), (2.2) and (2.3) do not need to be considered in determining an

equilibrium syngas composition. The three heterogeneous (i.e. gas and solid phase) reactions (2.4), (2.5) and (2.6) are sufficient.

In general, we are concerned with situations where the carbon conversion is also essentially complete. Under these circumstances, we can reduce equations (2.4)–(2.6) to the following two homogeneous gas reactions:

the CO shift reaction,

$$CO + H_2O \leftrightarrows CO_2 + H_2 \qquad -41 \text{ MJ/kmol} \tag{2.7}$$

and the steam methane reforming reaction,

$$CH_4 + H_2O \leftrightarrows CO + 3H_2 \qquad +206 \text{ MJ/kmol} \tag{2.8}$$

Note that by subtracting the moles and heat effects from reaction (2.4) from those in reaction (2.5), one obtains reaction (2.7), and by subtracting reaction (2.6) from (2.5), one obtains reaction (2.8). Thus reactions (2.7) and (2.8) are implicit in reactions (2.4), (2.5) and (2.6) – but not the other way around! Three independent equations always contain more information than two.

Reactions (2.1), (2.4), (2.5) and (2.6) describe the four ways in which a carbonaceous or hydrocarbon fuel can be gasified. Reaction (2.4) is important for the production of pure CO when gasifying pure carbon with an oxygen/CO_2 mixture. Reaction (2.5) plays a predominant role in the water gas process. Reaction (2.6) is the basis of all hydrogenating gasification processes. But most gasification processes rely on a balance between reactions (2.1) (partial oxidation) and (2.5) (water gas reaction).

For real fuels (including coal, which also contains hydrogen), the overall reaction can be written as:

$$C_nH_m + n/2O_2 = nCO + m/2H_2 \tag{2.9}$$

where

- for gas, as pure methane, $m = 4$ and $n = 1$, hence $m/n = 4$
- for oil, $m/n \approx 2$, hence $m = 2$ and $n = 1$
- for coal, $m/n \approx 1$, hence $m = 1$ and $n = 1$.

Gasification temperatures are in all cases so high that, thermodynamically as well as in practice, no hydrocarbons other than methane can be present in any appreciable quantity.

Thermodynamic equilibrium

As indicated by the double arrows, equations (2.4) to (2.8) are all reversible reactions – that is to say they may proceed both from right to left as well as from

left to right. In general, the forward and the reverse reactions take place simultaneously and at different rates. For any given temperature, these reaction rates are proportional to the quantity of reactants available to drive the reaction in the direction under consideration.

If we take the CO shift reaction (equation 2.7) as an example, the forward reaction rate, r_f, is proportional to the molar concentrations of CO and H_2O per unit volume, or

$$r_f = k_f \cdot [CO] \cdot [H_2O]$$

where the constant of proportionality, k_f, is temperature-dependent. Similarly, for the reverse reaction,

$$r_r = k_r \cdot [CO_2] \cdot [H_2]$$

Over a period of time these two reaction rates will tend to reach a common value and the gas composition will have reached a state of equilibrium. Under these circumstances,

$$K_p = \frac{k_f}{k_r} = \frac{[CO_2] \cdot [H_2]}{[CO] \cdot [H_2O]}$$

where K_p is the temperature-dependent equilibrium constant for the CO shift reaction. Assuming ideal gases this can also be expressed as

$$K_p = \frac{p_{CO_2} \cdot p_{H_2}}{p_{CO} \cdot p_{H_2O}} = \frac{v_{CO_2} \cdot v_{H_2}}{v_{CO} \cdot v_{H_2O}} \tag{2.10}$$

where p_{CO} is the partial pressure and v_{CO} is the volume fraction p_{CO}/p of CO in the gas, and so on.

Similarly, the equilibrium constants for the other reactions can be expressed as

$$K_p = \frac{p^2{}_{CO}}{p_{CO_2}} = \frac{(v_{CO})^2}{v_{CO_2}} \cdot p \tag{2.11}$$

for the Boudouard reaction (2.4),

$$K_p = \frac{p_{CO} \cdot p_{H_2}}{p_{H_2O}} = \frac{v_{CO} \cdot v_{H_2}}{v_{H_2O}} \cdot p \tag{2.12}$$

for the water gas reaction (2.5),

$$K_p = \frac{p_{CH_4}}{p_{H_2}} = \frac{v_{CH_4}}{v^2{}_{H_2}} \cdot \frac{1}{p} \tag{2.13}$$

for the methanation reaction (2.6), and

$$K_p = \frac{p_{CO} \cdot p^3{}_{H_2}}{p_{CH_4} \cdot p_{H_2O}} = \frac{v_{CO} \cdot v^3{}_{H_2}}{v_{CH_4} \cdot v_{H_2O}} \cdot p^2 \tag{2.14}$$

for the reforming reaction (2.8), where p is the total absolute pressure of the gas.

The temperature dependency of these equilibrium constants can be derived from fundamental data, but is usually expressed as a correlation of the type

$$\ln(K_{p,T}) = \ln(K_{p,T0}) + f(T)$$

where T is the absolute temperature in Kelvin. The derivation of the equilibrium constants is described in the file gasify.hlp on the companion website. These (albeit nonlinear) equations (2.10)–(2.13) provide us with a means of determining the relative concentrations of the gas components in the syngas on the assumption that the reactions have reached equilibrium.

Note that in the above discussions it has been assumed that the gases are ideal gases and no fugacities have been taken into account. Although many processes operate at pressures of 30–70 bar, this assumption is justified because of the high temperature in the processes, which lie very far from the critical temperature of each compound. Note that even where the calculations are used for the low temperature CO shift reaction, which operates at temperatures of 200–250°C, this approximation gives sufficiently accurate results for basic designs.

Other compounds

Most fuels contain additional material beyond the carbon, hydrogen and oxygen discussed above. Sulfur in the fuel is converted into H_2S and COS and the nitrogen into elemental nitrogen, NH_3 and HCN. Generally speaking, the quantities of sulfur and nitrogen in the fuel are sufficiently small that they have a negligible effect on the main syngas components of hydrogen and carbon monoxide. Nonetheless, it is necessary to consider the fate of sulfur and nitrogen because of the effect of the resulting compounds downstream of the gas production, e.g. environmental emissions, gas treating, catalyst poisons and so on.

Details concerning the formation of sulfur and nitrogen compounds are included in section 6.9. Since the amounts of sulfur and nitrogen converted into the various

product molecules are not large, the distribution of sulfur and nitrogen compounds is usually estimated in advance (e.g. COS = 2.5–6% of total sulfur, NH_3 = 25% and HCN = 10% of fuel nitrogen respectively) and interaction with carbon, hydrogen and oxygen is then limited to mass and heat balance calculations.

2.2 THERMODYNAMIC MODELING OF GASIFICATION

Both designers and operators need to have some knowledge about thermodynamic modeling, although, in developing models for gasification, it should be noted that the requirements of a designer and an operator are different.

The designer has the task of calculating a limited number of design cases and using these to size the plant equipment. He will be interested in throughputs of the different feedstocks, gas compositions, heat effects, quench requirements, start-up and shutdown requirements, optimal conditions for the design feedstocks, and process control requirements.

The operator has his equipment as it is, but will need to optimize operations for feedstocks that are seldom identical with the formal design case. He will therefore be more interested in what he can expect when feeding a specific cocktail of feedstocks, how to interpret gas compositions and, for example, the steam make in a syngas cooler. Once the unit runs stably, he will become interested in optimizing the process.

A good model will therefore be built so that both requirements can be readily met without the user having to perform an undue number of iterative calculations to perform his or her task.

The purpose of gasification modeling is:

- Calculation of the gas composition
- Calculation of the relative amounts of oxygen and/or steam and/or heat required per unit fuel intake
- Optimization of the energy in the form of heat of combustion of the product gas or, alternatively, of the synthesis gas production per unit fuel intake
- Provision of set points for process control.

Calculations comprising the gasification proper are based on thermodynamics, mass and energy balances, and process conditions such as temperature, pressure and the addition or subtraction of indirect heat. In all these calculations it is essential that the elemental composition and the temperature of the feed streams be known. For coal, both the proximate analysis (fixed carbon, volatile matter, moisture, ash) and the ultimate analysis (elemental, apart from ash) must be known.

In gasification, use is made of a variety of reactions of which some are exothermic and some are endothermic, as was shown in section 2.1. In virtually all cases the desired operating temperature is obtained by judiciously playing with the exothermic and endothermic reactions. The reaction of the fuel with oxygen is always

complete and exothermic, whereas the reaction with steam or carbon dioxide is always endothermic and never complete because of thermodynamic limitations.

In gasifiers where both oxygen and steam are used to control the temperature, the role of steam is that of a moderator. Some other methods to moderate the temperature are to add nitrogen or carbon dioxide to the oxygen, or to remove heat indirectly from the gasification reactor.

In all cases, the fuel to a gasifier will contain carbon. The blast or gasifying agent is the mixture of oxygen containing gas and/or steam and/or carbon dioxide. Hence the blast always contains oxygen either as free oxygen or in the form of, for example, steam.

The companion website to this book includes a simple gasification model (gasify.exe), which illustrates these principles. The following discussion of specific aspects of gasifier modeling includes both general points, applicable to any model, as well as explaining the particular approach we have adopted for our own model.

2.2.1 Basic data

A model for gasification is only as good as the basic thermodynamic data used. To ensure consistency of mass and heat balances, it is of fundamental importance to limit the data set to a minimum and generate all other data from this.

In the calculations used in this book and in the website programs, use has been made of various sources, the most important being Barin (1989). For the thermodynamic calculations, standard enthalpy and entropy data have been used in combination with a curve-fit for the temperature dependency of the specific heat for each type of molecule.

For the moisture-and-ash-free (maf) coal, the default coefficients in the formula giving the temperature dependence of the specific heat have been based on graphite.

For the ash temperature dependence, the default coefficients in the formula giving the temperature dependence of the specific heat have been based on an average ash in which the heat of fusion has been taken into account. Where the ash and/or the fluxing agent added to the ash to lower the melting point contains carbonates, the heat of decomposition may have to be taken into account. The easiest way to do this, though, is to calculate the heat required and put it into the calculations as an additional heat loss from the gasifier.

Where alternative data, in particular for coal and ash, are desired, it would be necessary to modify the appropriate data. In the case of gasify.exe, this would need to be done in the source code.

Feedstocks

Feedstocks for gasification may vary from natural gas to heavy oil residues and coal. Furthermore, waste streams and biomass may be used. In order to carry out

proper calculations, it is essential that the elemental composition and the standard heat of formation of the fuels be known.

The standard heat of formation of the fuel may be calculated from the heat of combustion and the elemental composition of the fuel without the ash. Ash in the fuel is generally considered as being inert in the calculations. By subtracting the heat of combustion of the various elements in the fuel (in practice carbon, hydrogen and sulfur) from the heat of combustion of the fuel, the standard heat of formation is obtained. Care should be taken to normalize the quantities of the fuel and the relevant elements, as well as to ensure that they are all based on either the lower heating value (LHV) or the higher heating value (HHV) of the fuel.

Where no measured values are available, the heat of combustion of the fuel may be calculated from the proximate and ultimate analyses – gasify.exe includes some suitable empirical correlations. It is always recommended to check whether the measured data (when available) are in agreement with the calculated data. If these deviate by more than 2–3%, it is recommended to use the calculated data for coal and heavy oil fuels. For natural gas fuels, it is recommended always to use the calculated heats of combustion. The most difficult fuels are biomass and waste feedstocks, where the calculated and measured values may easily deviate by over 5%. Careful scrutiny of the measured data is then recommended.

Coal

Composition and combustion data for coal are often very confusing, as the composition data may be based on an as-received (ar), moisture-free (mf), ash-free (af), or ash-and-moisture-free (maf) basis. Moreover, the heating value can be given as LHV or HHV, possibly on a different basis than the proximate and ultimate analysis. For this reason, gasify.exe includes a module that readily converts all these data into each other. For the ash and maf coal, it has been arbitrarily assumed that these components have a molecular mass of 100.

Moderator

The most common moderator used in gasification processes is steam. The steam must have a minimum temperature corresponding to that of saturated steam at the pressure prevailing in the gasifier, otherwise condensation in the lines to the gasifier will occur. In general, superheated steam at a temperature of 300–400°C is used. At pressures above 40 bar this superheat is mandatory, since otherwise the steam becomes wet on expansion.

The use of carbon dioxide as a moderator is unusual but not entirely unknown. Some plants use it to influence the H_2/CO ratio of the synthesis gas where carbon monoxide or a CO-rich gas is the product. A process has been published using an oxygen-blown gasifier for the production of pure carbon monoxide from coke, incorporating carbon dioxide as a moderator (Lath and Herbert, 1986).

Where CO_2 is used as a transport gas for pulverized coal in entrained-flow gasifiers, it will also act as moderator or part thereof.

2.2.2 Equations

Forgetting for the moment the presence of other compounds and elements such as sulfur, nitrogen, argon, ash, and so on, the following equations will apply in virtually all gasification processes (Gumz, 1950).

1. Carbon balance
2. Hydrogen balance
3. Oxygen balance
4. Dalton equation, stating that the sum of the mole fractions in the product gas equals unity
5. Heat balance, stating that the sum of the heat of formation and the sensible heat of the product(s) equals that of the corresponding data in the feed stream(s), provided it is corrected for heat that is indirectly added to or subtracted from the process
6. Reaction constants of the relevant reactions – in general, three for the heterogeneous case where carbon is present and two for the homogeneous case.

Note that in selecting the reactions for both heterogeneous and homogeneous reactions, it is essential that the relevant compounds in the set of reactions are present. In the heterogeneous case, reactions (2.5) and (2.6) could just as well have been replaced by reactions (2.7) and (2.8), and in the homogeneous case; whereas reaction (2.8) could be replaced by the CO_2 reforming reaction:

$$CH_4 + CO_2 \leftrightarrows 2CO + 2H_2 \qquad +247 \text{ MJ/kmol } CH_4 \tag{2.15}$$

Where pure carbon is to be gasified with a blast of oxygen and carbon dioxide, then the hydrogen balance and reactions (2.5) and (2.6) fall away.

In practice, fuels such as coal and heavy oils will also contain sulfur, nitrogen and ash, and the oxygen may contain argon. This implies that the material balances have to be extended with the following equations:

7. Sulfur balance
8. Nitrogen balance
9. Ash balance
10. Argon balance.

Of course these additional elements will also have to be considered in the heat balance (see point (5) above).

2.2.3 Variables

Again ignoring sulfur, nitrogen and others initially, it is necessary to define eight variables for the heterogeneous case and seven for the homogeneous case to provide a mathematically soluble problem. Five variables that virtually always apply in gasification are the gas component fractions in the synthesis gas for CO_2, CO, H_2, CH_4 and H_2O. The remaining three variables in the case of heterogeneous gasification and two in the case of homogeneous gasification may be selected from the following list:

- Fuel used per kmole product gas
- Blast (oxidant) used per kmole product gas
- Moderator (mostly steam) used per kmole product gas
- Heat loss from the gasifier reactor or heat required for the gasification
- Gasification temperature (though any result would need to be checked in respect of the ash properties).

2.3 DEDUCTIONS FROM THE THERMODYNAMIC MODEL

2.3.1 Effect of pressure

There is a considerable advantage to gasifying under pressure, sufficiently so that practically all modern processes are operated at pressures of at least 10 bar, and up to as high as 100 bar. The reasons for this are savings in compression energy and reduction of equipment size. To appreciate the realities of savings in compression energy, we can compare the energy required to provide 100,000 Nm^3/h raw synthesis gas at 45 bar by either

1. gasifying at close to atmospheric pressure (5 bar) and compressing the synthesis gas, or alternatively
2. compressing the feedstocks to 55 bar (allowing for a pressure drop in the system) and gasifying at the higher pressure.

For the calculations we will use an oil feedstock, so as to include simply the energy for raising the fuel pressure in the second case. It is also assumed that oxygen is available from an air separation unit at atmospheric pressure in both cases. The energy is given as shaft energy on the machines. The enthalpy difference of the moderating steam in the two cases is neglected (see Table 2.1).

The pressure in a gasifier is therefore generally selected in accordance with the requirements of the process or equipment upstream or downstream of the gasifier. For extremely high pressures, as required by ammonia synthesis (130–180 bar),

Table 2.1
Comparison of compression energy for low and high pressure gasification

		5 bar gasification	50 bar gasification
Feed pumping energy	35,450 kg/h	0.03 MW	0.09 MW
Oxygen compression	21,120 Nm³/h	2.85 MW	4.97 MW
Syngas compression	100,000 Nm³/h	19.70 MW	0.00 MW
Total		22.58 MW	5.06 MW

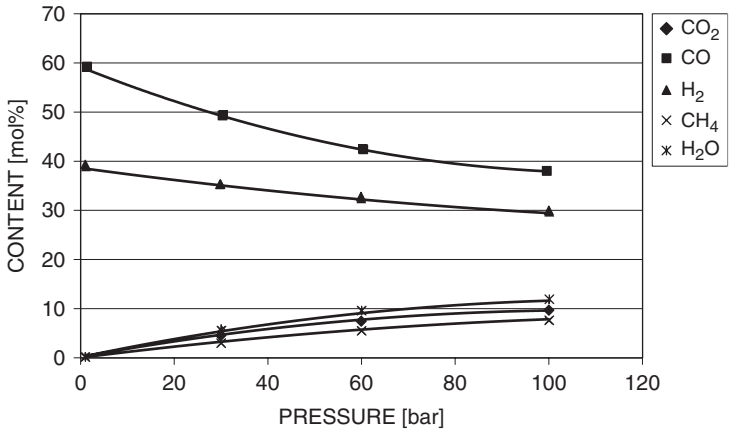

Figure 2.1 Influence of pressure on syngas compositions at 1000°C.

this argument ceases to be dominant, as gasification at pressures above 70–100 bar becomes impractical for equipment reasons. When the gas is to be used in a Combined Cycle (CC) power station where the gas turbine requires a pressure of 20 bar, the gasifier pressure may operate at a somewhat higher pressure than this to allow for pressure losses between the gasifier and the gas turbine.

Strictly speaking, allowance should be made in preparing the above figures for the fact that the syngas ($CO + H_2$) yield and the heating value of the gas are somewhat different at the two gasification pressures. This slight difference does not, however, alter the conclusion that, other things being equal, compression of the reactants is energetically superior to compression of the gasifier product gas. Other considerations when selecting a gasification pressure are discussed in section 6.1.

It is instructive to see how the gas composition changes with pressure, and this is shown in Figures 2.1 and 2.2 with the calculations all performed at 1000°C. The increase in methane and CO_2 content in the synthesis gas with increasing pressure

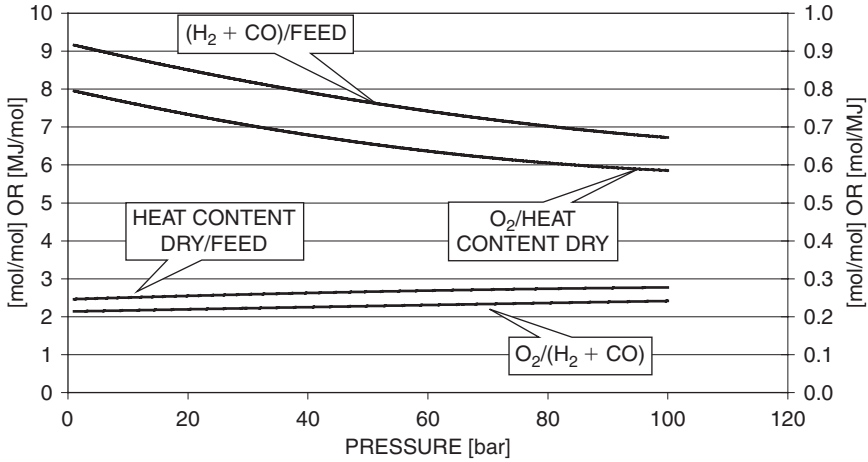

Figure 2.2 Influence of pressure on yields at 1000°C.

can be seen clearly in Figure 2.1. In Figure 2.2 it is plain that the yield of synthesis gas (as H_2 + CO) drops with pressure, whereas the heat content yield increases (reflecting the higher methane content). Similarly, the variation in oxygen demand goes in opposite directions depending on whether it is expressed per unit of syngas or per unit of heating value.

We will return to these effects later in the chapter, when looking at the differences between optimizing for IGCC and for synthesis gas applications.

If we repeat the above calculations at, say, 1500°C, we see in principle the same trends with increasing pressure. However if we look at the actual numbers in Table 2.2, then we notice that at this temperature the actual changes of gas composition with pressure are almost negligible.

2.3.2 Effect of temperature

The temperature is generally selected on the basis of the ash properties (i.e. below the softening point of the ash for fluid-bed and dry ash moving-bed gasifiers, and above the melting point for slagging gasifiers). For coals with very high ash melting points it is often advantageous to add flux to the coal feed in order to lower the ash melting point. As will be discussed later, gasifying at very high temperatures will increase the oxygen consumption of a gasification process and will reduce the overall process efficiency.

For process control purposes, where ratios between fuel, oxygen and/or steam are known, the temperature can be calculated. This is an important aspect, as temperatures in slagging gasifiers can only be measured with great difficulty and are generally not very trustworthy.

Table 2.2
Variations of syngas compositions and yields at 1500°C

		1 bar	30 bar	60 bar	100 bar
CO_2	mol%	0.00	0.11	0.21	0.34
CO	mol%	63.42	63.23	63.14	62.88
H_2	mol%	34.37	33.99	33.53	33.07
CH_4	mol%	0.01	0.27	0.52	0.85
H_2O	mol%	0.01	0.21	0.41	0.67
Others	mol%	2.19	2.19	2.19	2.19
Total	mol%	100.00	100.00	100.00	100.00
H_2 + CO/feed	mol/mol	8.61	8.52	8.45	8.36
LHV dry/feed	MJ/mol	2.31	2.31	2.32	2.32
$O_2/(H_2 + CO)$	mol/mol	0.27	0.27	0.27	0.27
O_2/LHV dry	mol/MJ	0.99	0.99	0.98	0.97

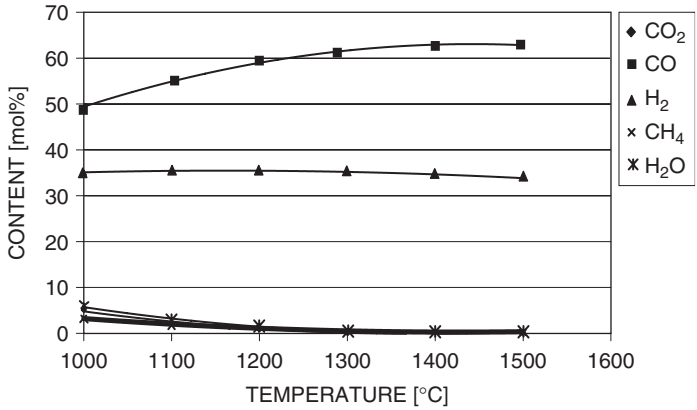

Figure 2.3 Influence of temperature on syngas compositions at 30 bar.

Since most modern gasification processes operate at pressures of 30 bar or higher, temperatures of above 1300°C are required in order to produce a synthesis gas with a low methane content. The fact that such a high temperature is required in any case for thermodynamic reasons is why there is little scope for the use of catalysts in gasifiers. The use of catalysts is restricted to clean gasification environments that are only encountered in the partial oxidation of natural gas and in steam methane or naphtha reforming.

This observation leads us on to perform the same exercise of investigating the variations of gas compositions and yield with temperature, as shown in Figures 2.3 and 2.4.

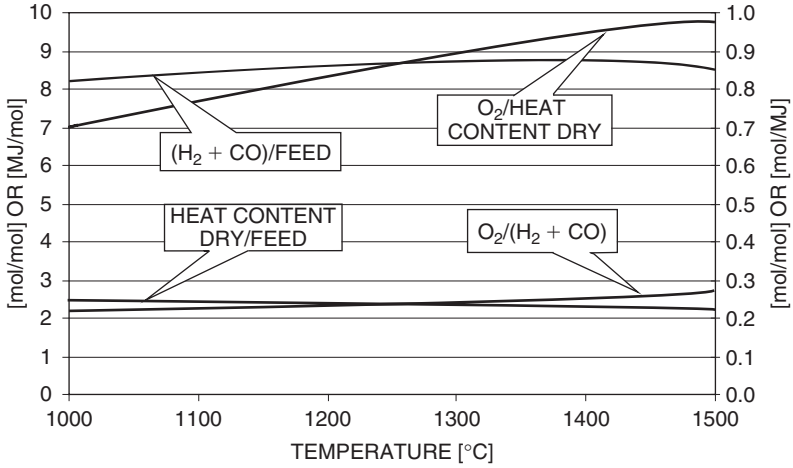

Figure 2.4 Influence of temperature on yields at 30 bar.

In Figures 2.3 and 2.4 we can see that with increasing temperature the gas becomes increasingly CO-rich. In Figure 2.4, the increased oxygen demand at high temperature is apparent. The H_2 + CO yield goes through a mild maximum between 1200 and 1300°C.

2.3.3 Fuel footprint

For a good understanding of the gasification of any particular feedstock, whether coal, heavy oil, waste biomass or gas, it is important to calculate the gasification characteristics of the fuel in order to be able to understand what is going on in the reactor and to optimize the reaction conditions.

Instead of discussing this topic in general terms of fuel, oxygen-containing gas and moderator, this will be done in terms of carbon, oxygen and steam – but remember, it holds for any fuel!

A most instructive representation of the fuel gasification characteristic is the "footprint", which comprises a graph where, for a specified heat loss from the gasification reactor and a specific set of reactants – coal, oxygen and steam, each with a fixed temperature and composition – the steam consumption in kmol/100kg feedstock is plotted along the ordinate, and the oxygen consumption in kmol/100kg feedstock is plotted along the abscissa. Such a graph made for various heat losses forms the fuel footprint. In Figure 2.5 an example is given for pure carbon (graphite) in which, for a fixed heat loss, various isotherms are drawn together with the borderline below which no complete conversion of the carbon is thermodynamically possible. In this graph the steam and oxygen are plotted as kmole per kmole pure carbon.

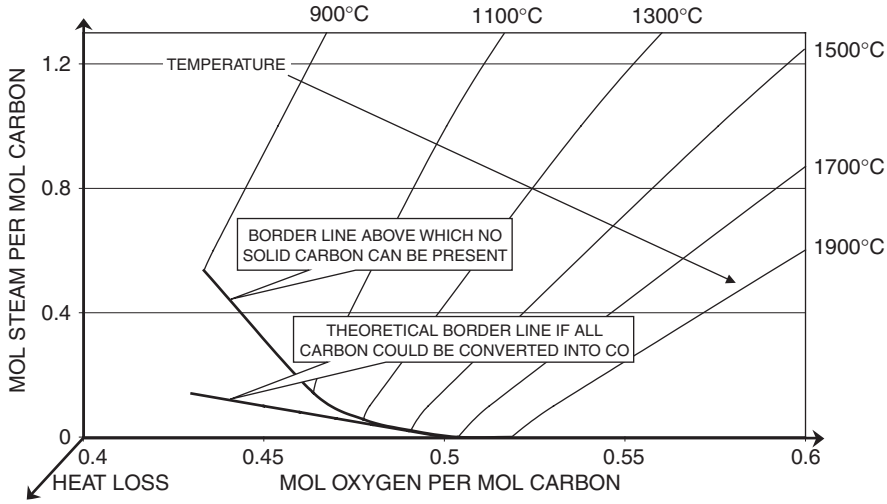

Figure 2.5 Gasification footprint for pure carbon.

In the lower left-hand corner of Figure 2.5 the straight line represents the minimum amount of gasifying agents (oxygen and steam) that are required to gasify the coal, assuming no H_2O, CO_2 and CH_4 are present in the gas. Thermodynamically this is not possible; the real line assuming thermodynamic equilibrium, and the addition of just sufficient oxygen and steam so as to gasify all carbon, is represented by the curved line above it. The lower-temperature part of this line is typical for fluid-bed gasifiers, and, for example, the hot lower part of a dry ash moving-bed gasifier. The departure from the straight line implies that part of the steam remains unconverted for thermodynamic reasons. It also means that the CO_2 and, to a lesser extent, the CH_4 content become higher. It is observed that at temperatures of about 1500°C, which are typical for dry coal feed entrained-flow slagging gasifiers, the straight line and the thermodynamic equilibrium line almost touch each other.

To generate the isotherms, the steam-to-product gas ratio is fixed above the minimum required for complete gasification at the given temperature. It is seen that in order to carry the additional steam ballast to the same high temperatures prevailing in the gasifier, more oxygen is required. This is hence a less efficient operation. The surplus of gasifying agent implies that no carbon can be present. Therefore, the two equilibrium constants of the CO shift and the steam methane reforming equation will have to be used in the calculations instead of those of the three heterogeneous equations (Boudouard, water gas and hydrogasification). Because the steam-to-product-gas ratio is known, the number of equations and variables remain identical and the algorithm can be solved.

In practice, one will never want to operate at the thermodynamic equilibrium line, as carbon formation may occur at the slightest operational disturbance. Typically,

for dry coal feed slagging gasifiers it is assumed that less than 1% of the carbon remains unconverted, hidden in ash particles, and 1–1.5 mol% of CO_2 is present in the gas. This gives some room for process control.

2.3.4 Surprises in calculations

When calculations are carried out for a gasifier assuming heterogeneous reactions, it may come as a surprise that sometimes the quantity of moderator required is negative. The reason may be that the fuel and/or the blast contain so much ballast in the form of ash, water, steam or nitrogen that the desired temperature can only be obtained by consuming more oxygen than is required to gasify all carbon in the fuel. What happens in the calculations is that the algorithm tries to reduce the amount of moderator, but only when the moderator becomes negative is a mathematically valid solution obtained. In other words, the area below the abscissa in Figure 2.5 has been reached. The logical way out is to set the quantity of moderator at zero, but then there is one equation too many, as the ratio of moderator to product gas is set to zero. Again the solution is found in using the two equilibrium constants of the CO shift and the steam-methane reforming reactions instead of the three for the heterogeneous gasification. Examples where this situation may occur are:

- the use of undried low-rank coal in a dry coal feed entrained-flow slagging gasifier
- the use of a coal/water slurry in an entrained-flow slagging gasifier
- the use of air as blast in entrained-flow gasifiers.

In all cases where no moderator is required the process control becomes much simpler as, just as in a furnace, only two streams have to be controlled instead of three.

2.4 OPTIMIZING PROCESS CONDITIONS

Dry coal feed entrained-flow slagging gasifiers operate at temperatures of typically 1500°C. At this temperature the oxygen consumption is high, but nevertheless there is still some moderator required. The challenge is to operate with close to the minimum amount of gasifying agent required, as this reduces the amount of expensive oxygen per unit product gas. But there is more; the less oxygen that is used, the more steam we need. This is not so bad, as oxygen is more costly than steam. However, there is a more important advantage that becomes clear when we look at the two most relevant gasification reactions for this type of gasifier:

$$C + \tfrac{1}{2}O_2 = CO \qquad -111 \text{ MJ/Kmol} \tag{2.1}$$

and

$$C + H_2O \leftrightarrows CO + H_2 \qquad +131\,\text{MJ/kmol} \tag{2.5}$$

The heat balance dictates that most of the gasification will be accomplished via reaction (2.1), but every carbon that can be gasified should be gasified with steam via reaction (2.5), as this reaction yields two molecules of synthesis gas per atom of carbon with cheap steam, while reaction (2.1) yields only one with expensive oxygen. More about optimization will be discussed in section 6.8.

In order to optimize the process conditions in a dry coal feed entrained-flow slagging gasifier, first the equations are solved for the heterogeneous case, as this gives the minimum amount of oxygen per mole synthesis gas. Then, in order to obtain a realistic operating window, the calculations are repeated for a somewhat higher CO_2 content in the gas for the homogeneous case, and that is then made the set point for the further operation.

Although most entrained-flow gasifiers operate with a surplus of gasifying agent (blast), there are and have been exceptions. One example is the first slagging stage in the type of two-stage gasifier with steam-blown second stage, as described in section 5.3.1 (page 125). In such a case the lack of gasifying agent causes carbon to slip to a second non-slagging stage, where it is further converted with steam.

2.4.1 Process indicators

When calculating the coal footprint, it is very useful also to draw the iso-CO_2 and iso-CH_4 lines in the various graphs (see Figure 2.6). The fact that the iso-CO_2 lines run more or less perpendicular to the isotherms, and the iso-CH_4 lines more or less parallel, shows that the CH_4 content of the product gas is a better indicator for the temperature at which the gas leaves the gasifier than the CO_2 content. The latter can only be used in cases where the oxygen/steam ratio is fixed, or in cases where no steam is required as moderator for the gasification.

Another good indicator of the gasification temperature is the heat flux through the reactor wall. Where a tube-wall or a jacket is used as the reactor wall, the steam make in the wall is a very valuable indicator for the reactor temperature (provided that this steam production is not integrated with other steam systems in such a way that it can not be measured properly).

For the gasifier performance, measurement of the CO_2 and CH_4 content in the product gas together with the heat flux through the reactor wall provides the best indicators. In practice, data will be used that are gathered from experience. The calculations will give good leads during start-up and the initial non-optimized operation of the unit, but for the fine-tuning the real data are more valuable, as will be explained in section 6.8.

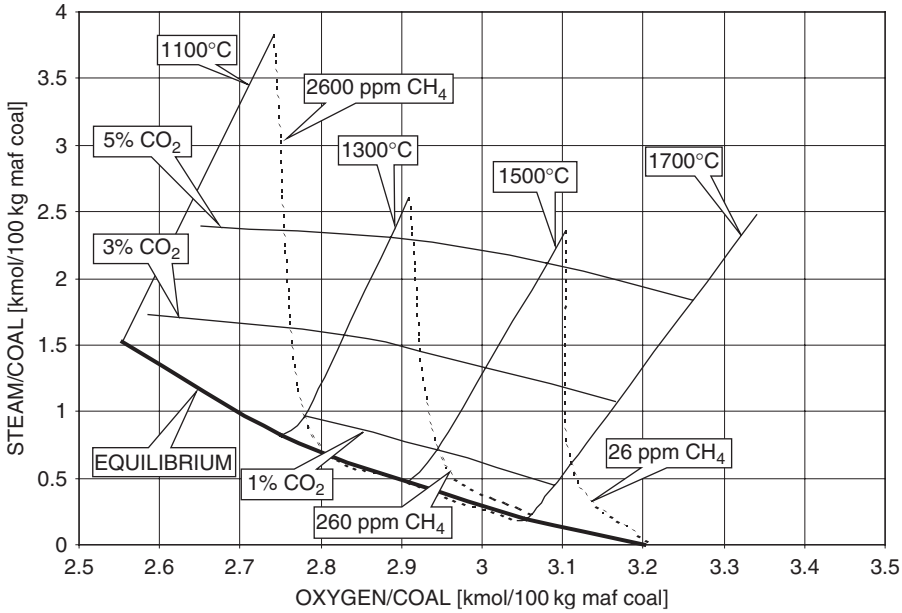

Figure 2.6 Iso-CO_2 and iso-CH_4 lines for pure carbon.

2.4.2 Optimum operating point

Efficiencies

There are several different criteria that are frequently quoted for gasification processes (Reimert, 1989). The two most commonly encountered are cold gas efficiency (CGE) and carbon conversion. The definitions are:

$$\text{Cold gas efficiency (\%)} = \frac{\text{Heating value in product gas (MW)}}{\text{Heating value in feedstock (MW)} \times 100}$$

whereby it is important always to clarify whether the heating values are on a higher heating value (HHV) or lower heating value (LHV) basis.

Carbon conversion is defined as:

$$\text{Carbon conversion (\%)} = \left\{1 - \frac{\text{Carbon in gasification residue } [\text{kmol/h}]}{\text{Carbon in feedstock } [\text{kmol/h}]}\right\} \times 100$$

Despite the frequency with which these figures are quoted for different gasification systems, care is required with their interpretation, since both only provide a limited statement about the process efficiencies and gas quality. A process which produces a gas with a relatively high methane content and therefore has a high cold gas efficiency will be good in a power application, but may not be the optimum choice for a synthesis gas application, in which case the (H_2 + CO) yield will provide a better guide to process selection.

IGCC applications

The reason why it can be advantageous to gasify coal in power plants is twofold; for efficiency reasons and environmental reasons.

The efficiency advantage is attributed to the fact that use can be made of the more advanced combined cycle where gas is fired in a gas turbine (Brayton or Joule cycle) and the hot gases leaving the turbine are used to raise steam for a conventional steam (Rankine) cycle. The alternative is firing coal in a conventional steam plant using only a Rankine cycle. The efficiency for gas firing in a state-of-the-art combined cycle is about 59%, a figure has to be multiplied with the gasification efficiency of typically 81.4%, resulting in an overall efficiency of 48%, whereas the efficiency of coal firing in a conventional state-of-the-art steam plant is about 45%. A simple calculation shows that the CGE has to be above 76.3% in order to make gasification attractive in terms of overall process efficiency. This is all that we will say at this point, as it is sufficient in the context of optimization. More will follow in section 7.3.

The environmental advantage of gasification-based power stations has always been used as an important point in their favor, based mainly on the fact that in the past the sulfur compounds in the fuel gas could be removed with a higher efficiency than from flue gases from conventional coal or heavy-oil fired power stations. Moreover, there used to be much optimism that high temperature sulfur removal would be possible, which would enhance the efficiency of the IGCC. As will be explained in section 7.3, there is a case to be made for reconsidering flue gas treating for IGCC, as many more compounds have to be removed as well as sulfur. Furthermore, the efficiency of flue gas desulfurization has improved considerably over the past 20 years. However, it has to be accepted that environmental arguments are a permanently moving target, since the recent discussion of CO_2 capture and sequestration may provide a new advantage for fuel-gas treating. This is, however, still dependent on politics.

For fuel gas applications the gasification temperature has to be as low as possible, as this will result in the highest CGE (and in the lowest oxygen consumption). In Figure 2.7, iso-CGE lines have been drawn that clearly illustrate this point, as the isotherms run essentially parallel to the iso-CGE lines. Although fluxing may help to enlarge the operating window for certain coals, as will be discussed in section 5.3, the minimum temperature in slagging gasifiers will always be determined by

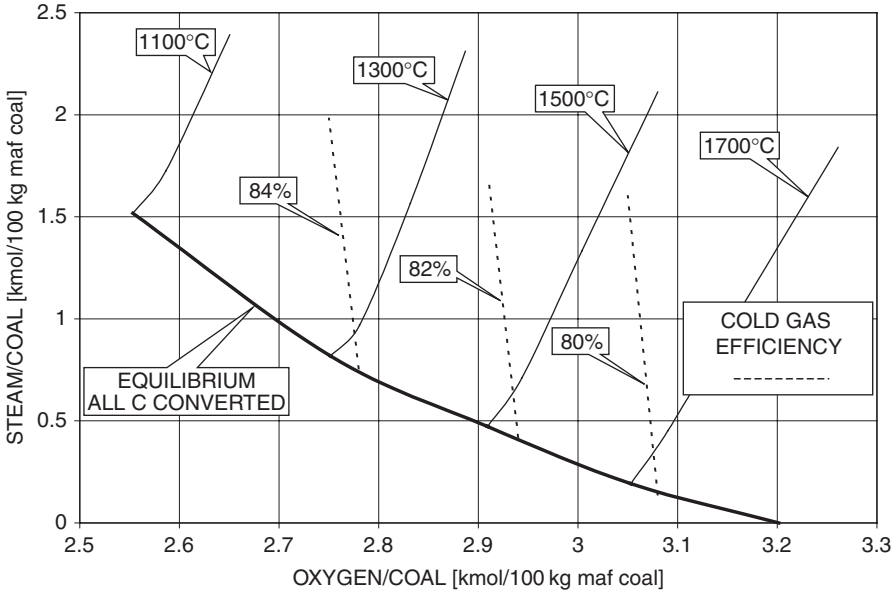

Figure 2.7 Cold gas efficiencies.

the ash-melting characteristics of the coal. An additional consideration for all gasifiers is the reactivity of the coal, since the operating temperature also establishes the relationship between gasifier volume and throughput, or in other words the required residence time.

In general, temperatures of below 1400°C for low-rank coals and below 1450°C for high-rank coals are impractical. As the data in Figure 2.7 show, the operation should be as close to the thermodynamic equilibrium line for the heterogeneous reactions as is practicably possible.

Syngas and hydrogen applications

For synthesis gas application, the situation is somewhat different. In this case the moles of H_2 + CO per unit feedstock have to be optimized. The effect of the operating conditions on this maximum is illustrated in Figure 2.8.

The optimum along the abscissa is caused by the effect that at lower temperatures more carbon is converted into CO_2 and CH_4, whereas the aim is to convert as much as possible into CO. There is also a maximum along the ordinate. This is caused by the fact that by adding somewhat more steam, less CH_4 will be formed, and some additional heat will be generated by the CO shift reaction.

The latter effects are small, but they are there. The result is that for a fixed heat loss and reactant composition and temperature, there is one point that yields the

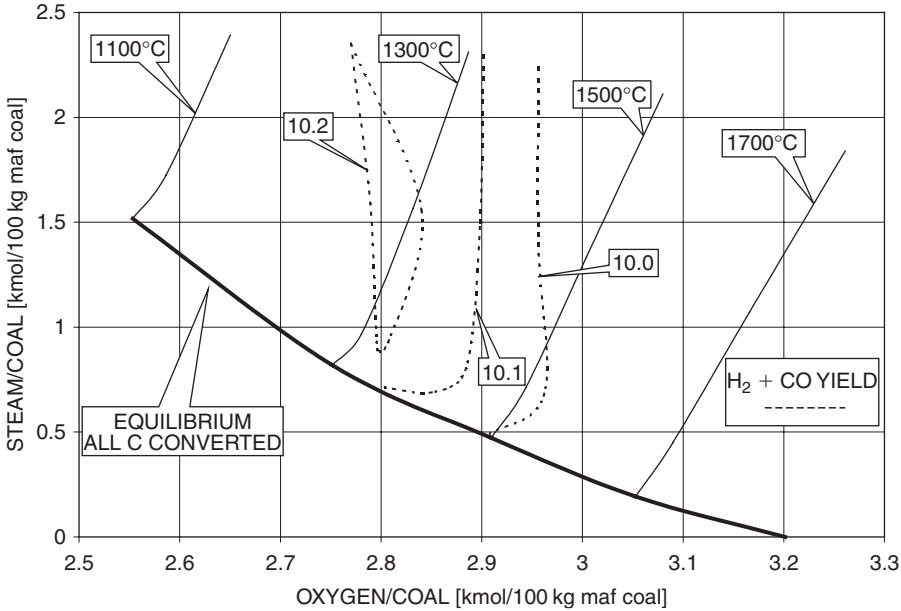

Figure 2.8 Syngas (H_2 + CO) yields for coal.

maximum amount of synthesis gas. The effect is of more importance for heavy oil gasification than for coal gasification, as the ash limitations for coal may not allow an operation at such low temperatures where these effects become relevant.

REFERENCES

Barin, I. (1989). *Thermo-Chemical Data of Pure Substances*. Weinheim: VCH Verlagsgesellschaft.

Gumz, W. (1950). *Gas Producers and Blast Furnaces*. New York: John Wiley & Sons.

Kersten, S.R.A. (2002). *Biomass Gasification in Circulating Fluidized Beds*. Enschede: Twente University Press.

Lath, E. and Herbert, P. (1986). Make CO from coke, CO_2 and O_2. *Hydrocarbon Processing*, 65: 55–56.

Reimert, R. (1989). Gas production. In: *Ullmann's Encyclopedia of Industrial Chemistry*, 5th edn., Vol. A12. Weinheim: VCH Verlagsgesellschaft, pp. 218–220.

van der Burgt, M.J. (1992). "Techno-historical aspects of coal gasification in relation to IGCC plants". Paper presented at 11th EPRI Conference on Gas-Fired Power Plants, San Francisco.

This page intentionally left blank

Chapter 3

The Kinetics of Gasification and Reactor Theory

The kinetics of gasification is as yet not as developed as is its thermodynamics. Homogeneous reactions occurring, for example, in the gas phase can often be described by a simple equation, but heterogeneous reactions are intrinsically more complicated. This is certainly the case with the gasification of solid particles such as coal, (pet)coke or biomass because of their porous structure. The latter complication causes mass transfer phenomena to play an important role in gasification in the gasification of solids.

3.1 KINETICS

The kinetics of coal gasification has been and still is a subject of intensive investigation. Despite this, the results of such investigations have to date flowed into the design procedures for commercial gasification reactors to only a limited extent. In contrast with Chapter 2, therefore, the presentation of kinetic theory in this chapter is restricted to the basic ideas and an indication of how and where appropriate application of kinetic theory could help in the design of future reactors.

A simplified reaction sequence for coal or biomass gasification can be described as in Figure 3.1.

For coke gasification, where the volatiles have already been removed in a separate process step, only the bottom part applies. As is discussed in other parts of this book, counter-current moving-bed gasifiers such as the Lurgi gasifier are an exception to this model, since the oxygen reacts with the coke and the devolatilization takes place using the hot synthesis gas. The volatiles in such a process do not come into contact with free oxygen.

For oil gasification, where the feedstock consists almost of pure volatiles, the pattern is also slightly different.

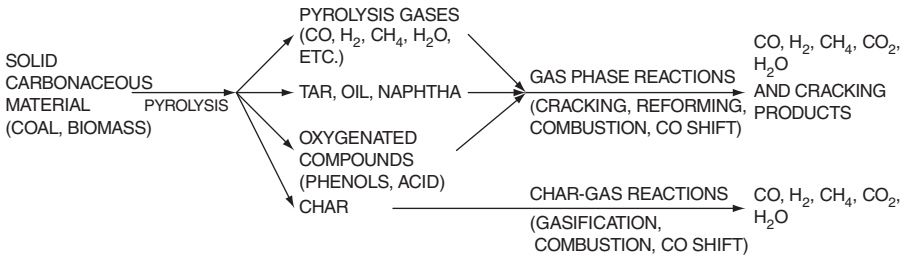

Figure 3.1 Reaction sequence for gasification of coal or biomass (adapted from Reimert and Schaub, 1989).

3.1.1 Devolatilization

The first step, heating up of the coal particles, is in one sense the simplest part of the process. Nonetheless, the speed at which it takes place has an influence on the subsequent steps, so it is of great importance in any accurate model.

Devolatilization takes place already at low temperatures (350–800°C) and in parallel with the heating up of the coal particles. The rate of heating of the coal particles influences the way in which the devolatilization takes place (Jüntgen and van Heek, 1981: 65). The rate of devolatilization is dependent not only on the rate of heating, however, but also on the particle size and the rate of gasification by the water gas reaction, and hence on the reaction temperature and the partial pressure of steam.

The interplay between pyrolysis and gasification under different heating conditions is shown in Figure 3.2. If the heating up is slow, then the pyrolysis reactions set in from about 350°C. The gasification reaction of both volatiles and char with steam is very slow at this temperature. The concentration of volatiles outside the particle increases rapidly, and gasification only sets in after devolatilization is complete. If, however, the rate of heating is high, then both pyrolysis and gasification take place simultaneously, so that a high concentration of volatiles is never allowed to build up. This is the reason why high temperature entrained-flow reactors produce a clean gas in such a short time. Compare this with a counter-current moving-bed process where lump coal is used. The heating up rate is slow and a high volatiles concentration is built up and removed unreacted from the reactor by the syngas.

For finely pulverized coal particles at high temperature, the residence time is very short (10–200 ms) (Smoot and Smith, 1985: 55). The extent of devolatilization is highly dependent on the final temperature, and can vary considerably from that found by performing a proximate analysis in accordance with the ASTM (American Society for Testing and Materials), the DIN (Deutsches Institut für Normung) or other standard methods. The product distribution of the devolatilization process also varies significantly with changes in the pyrolysis temperature and the speed of heating up.

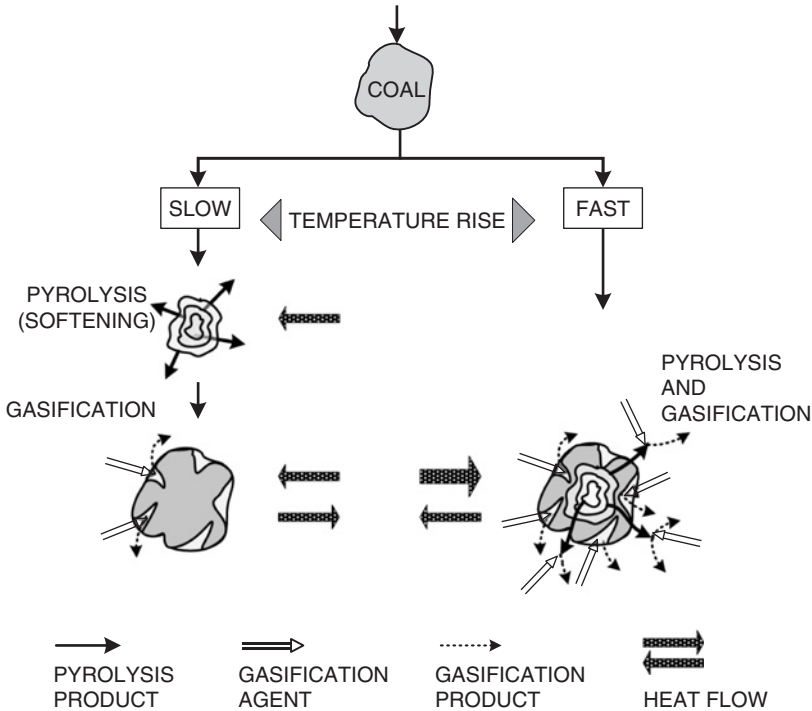

Figure 3.2 Influence of heating rate on gasification process (source: Jüntgen and van Heek, 1981).

Although devolatilization processes during gasification and combustion are thought to be generally similar, the fact that many gasification processes operate at higher pressures has to be taken into account. The weight loss due to devolatilization can be of the order of 10% less at typical gasifier pressures of 30 bar.

3.1.2 Volatiles combustion

The devolatilization of coal produces a variety of species, such as tars, hydrocarbon liquids and gases including methane, CO, CO_2, H_2, H_2O, HCN, and so forth (Smoot and Smith, 1985). This material reacts with the oxidant surrounding the coal particle. The extent to which the oxidant is completely or only partially depleted depends on the amount of volatiles produced.

In a combustion environment, where there is an overall excess of oxygen, the combustion of the volatiles is complete. In a gasification environment this is generally not the case, especially where the fuel has a high volatiles content. There is a recirculation of synthesis gas in many gasification reactors, not only in fluid-bed but also to some degree in entrained-flow reactors. To the extent that this occurs in the

vicinity of the burner, the effects are very different from the combustion situation. Recirculated combustion flue gas consists mainly of carbon dioxide, water vapor and (in the air-blown situation) nitrogen. The carbon dioxide and water vapor have a moderating effect, thus reducing temperature. In the case of gasification, the recycled gas contains significant quantities of carbon monoxide and hydrogen (up to 90% for an oxygen blown gasifier) and will cause locally very high temperatures, should it come into contact with the oxidant.

There is not much kinetic data available on volatiles combustion. It is, however, clearly established that this process, being a reaction between gases, is much more rapid than the heterogeneous char gasification where mass transport limitations play a more important role.

3.1.3 Char gasification

The slowest reactions in gasification, and therefore those that govern the overall conversion rate, are the heterogeneous reactions with carbon – namely the water gas, Boudouard and hydrogenation reactions already discussed in Chapter 2. The rates of reaction for the water gas and Boudouard reactions with char are comparable, and are several orders of magnitude faster than for the hydrogenation reaction (Smoot and Smith, 1985: 79).

There are several different models describing the Boudouard and water gas reactions (Williams *et al.*, 2000). A widely utilized model for the Boudouard reaction is attributable to Ergun (1956), and proposes a two-step process:

Step 1 $C_{fas} + CO_2 \leftrightarrows C(O) + CO$

Step 2 $C(O) \rightarrow CO + C_{fas}$

In the first step, CO_2 dissociates at a free carbon active site (C_{fas}), releasing carbon monoxide and forming an oxidized surface complex (C(O)). In the second step, the carbon–oxygen complex produces a molecule of CO and a new free active site. The rate-limiting step is the desorption of the carbon–oxygen surface complex.

The model for the water gas reaction is basically similar:

Step 1 $C_{fas} + H_2O \leftrightarrows C(O) + H_2$

Step 2 $C(O) \rightarrow CO + C_{fas}$

In this case, the first step is the dissociation of a water molecule at a carbon free active site (C_{fas}), releasing hydrogen and forming an oxidized surface complex (C(O)). In the second step, the carbon–oxygen complex produces a molecule of CO and a new free active site. In some models the rate-limiting step is the desorption of

the carbon–oxygen surface complex, as for the Boudouard reaction. Other models include the possibility of hydrogen inhibition by the inclusion of a third step:

Step 3a $\quad C_{fas} + H_2 \leftrightarrows C(H)_2$

Or

Step 3b $\quad C_{fas} + \frac{1}{2} H_2 \leftrightarrows C(H)$

whereby some of the sites can become blocked by hydrogen.

Fundamental work continues in this field to develop a detailed understanding of the mechanisms of gasification reactions (Williams *et al.*, 2000: 237).

Rate of reaction

For the Boudouard reaction (2.4),

$$C + CO_2 \leftrightarrows 2CO$$

being an equilibrium reaction, the reaction rate of carbon conversion

$$r_m = \frac{dC}{dt} \tag{3.1}$$

is assumed to be proportional to the concentration of CO_2 in the gas, so that

$$r_m = k_m \cdot c_{CO_2} \tag{3.2}$$

where k_m is the mass-related reaction-rate constant, c_{CO_2} is the concentration of CO_2 in the gas and the order of the reaction may be assumed to be 1.

The temperature dependency of the rate constant can be expressed in Arrhenius form as

$$k_m = A \cdot e^{\frac{-E}{RT}} \tag{3.3}$$

where A is a pre-exponential factor and E is the activation energy for the reaction. This can be expressed alternatively as

$$\ln(k_m) = -\frac{E}{R} \cdot \frac{1}{T} + \ln(A) \tag{3.4}$$

which provides a convenient form for comparing the reactivities of different chars.

Comparison of different types of solid feedstocks

The reactivity of different coal and chars depends on a number of factors, in particular:

- The porosity of the coal, i.e. its inner structure, surface and active sites
- The crystal structure of the fixed carbon
- The catalytic effects of ash components in the coal.

Young (low-rank) coals such as brown coal have a large specific surface and thus a high reactivity. On the other hand, older coals, particularly anthracitic coals, have a poor reactivity. Reactivity is enhanced by alkalis, particularly potassium.

In a systematic review, Bürkle (1998) has plotted the reactivity of different chars from various biomasses, coals, and other material, as shown in Figure 3.3.

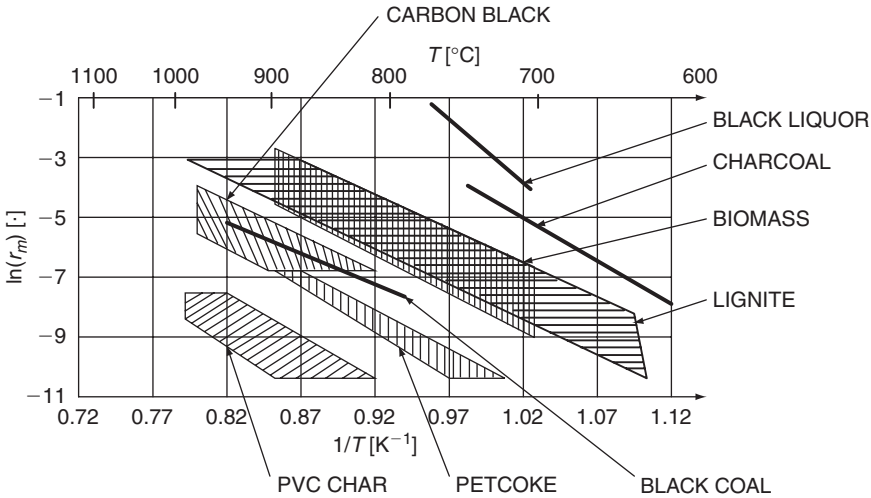

Figure 3.3 Reactivity of various materials as a function of temperature (source: Bürkle 1998).

Effective reactivities

In all cases it is necessary to distinguish between the physical and chemical steps involved, which in different temperature zones control the effective rate of reaction:

Zone I — The low-temperature zone, in which the chemical reaction is the rate-controlling step and the experimentally observed activation energy is the true activation energy.

Zone II — A medium temperature zone, in which the rate of chemical reaction is higher, but is limited by internal diffusion of the gaseous reactants through the pores of the individual particles; the observed activation energy is only about half the true value.

Zone III — A high temperature zone in which external, bulk surface diffusion of the gaseous reactants is rate-controlling and the apparent activation energy is very small.

This is illustrated in Figure 3.4.

Data for coal gasification are presented in Figure 3.5, from which it can be concluded that in any solid fuel gasification process the progress of the reaction is determined by the mass transfer phenomena.

Another indication of the importance of mass transfer is given in Figure 3.6, where the time required for the gasification of a solid fuel is plotted as a function of the particle size.

3.2 REACTOR THEORY

Classical chemical engineering theory teaches us about a variety of idealized reactor types. The oldest type of chemical reactor is the batch reactor, of which the coke oven is currently the only example that is relevant to gasification (Westerterp *et al.*, 1987). In the coke oven a batch of coal is indirectly heated via the side walls in a relatively flat vertical oven where devolatilization takes place. Such a batch process can also be

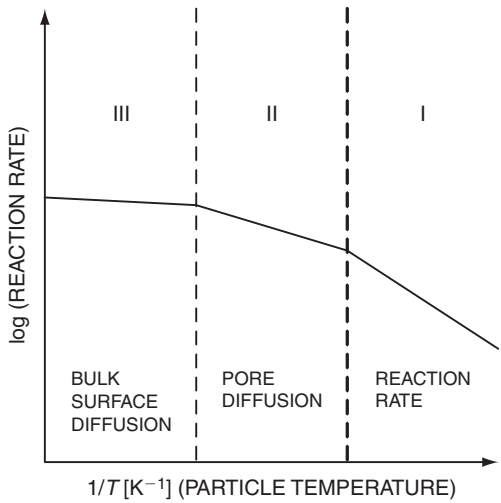

Figure 3.4 Effective reaction rates in temperature zones.

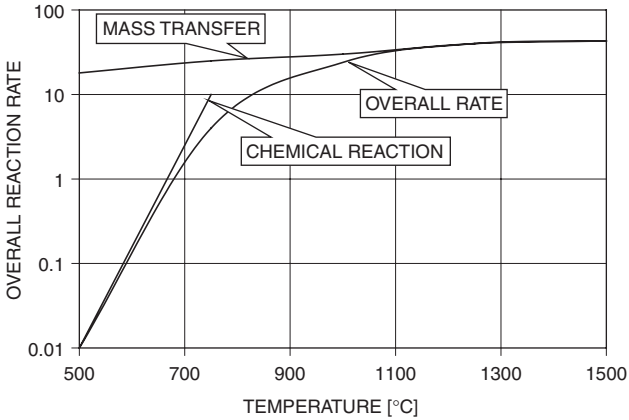

Figure 3.5 Overall gasification reaction rate as a function of temperature (source: Hedden, 1961, with permission from Elsevier).

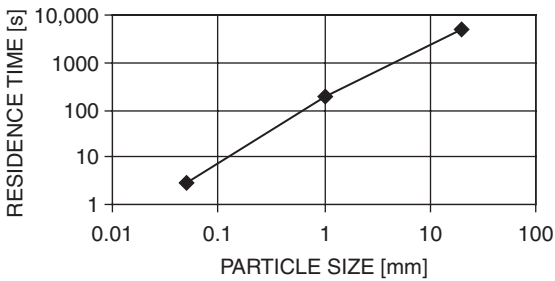

Figure 3.6 Time required for the gasification of a solid fuel as a function of particle size.

made semi-continuous, as is the case in a coal stove for domestic use and a moving-bed gasifier (see section 5.1), or fully continuous, as in large-scale grate-type furnaces as applied in power stations and industry. For the coal or other solid fuel, the fully continuous version is a typical example of a so-called plug flow reactor.

Plug flow reactors

The idealized plug flow reactor (PFR) is characterized by the following properties:

- There is a continuous flow through the reactor
- There are no radial gradients
- There is no axial mixing, i.e. there is no exchange of material or heat.

In addition, a plug flow reactor will generally be operated in a steady state manner.

For first-order kinetics and the generalized component A equations (3.1) and (3.2) can be expressed as:

$$-\frac{dc_a}{dt} = kc_A \tag{3.5}$$

which, after integration, yields for the concentration after time t

$$\frac{c_A}{c_{A,0}} = e^{-kt} \tag{3.6}$$

and for the conversion of component A

$$\frac{c_{A,0} - c_A}{c_{A,0}} = 1 - e^{-kt} \tag{3.7}$$

These reactions also hold for a batch reactor.

Continuously stirred tank reactors

The ideal continuously stirred tank reactor (CSTR) has the following characteristics:

- There is a continuous flow through the reactor
- The contents of the reactor are ideally mixed; thus the conditions are the same at all points in the reactor. This implies that the effluent has the same composition as anywhere else in the reactor. In the CSTR the mixing time should be about two orders of magnitude lower than the average residence time to achieve this.

When we set the average residence time equal to τ, we derive the relation for a first-order reaction at constant density from equation (3.5):

$$c_{A,0} - c_A = kc_A\tau \tag{3.8}$$

and so

$$\frac{c_A}{c_{A,0}} = \frac{1}{k\tau + 1}. \tag{3.9}$$

For the conversion of component A we then get:

$$\frac{c_{A,0} - c_A}{c_{A,0}} = \frac{k\tau}{k\tau + 1} \tag{3.10}$$

Equations (3.9) and (3.10) show that increasing the residence time τ will increase the conversion. In some cases, this can lead to impractically large reactors. In order to avoid this the single CSTR can be replaced by one or more CSTRs in series, which each have the same volume and residence time, but have a combined average residence time and volume that is equal to the single stage CSTR. For N stages we then obtain:

$$\frac{c_{A,N}}{c_{A,0}} = \left(1 + k \cdot \frac{\tau}{N}\right)^{-N} \tag{3.11}$$

As $N \to \infty$, this yields equation (3.6). An infinite number of CSTRs hence gives the same results as a PFR with the same overall residence time. In practice, a number of about four CSTRs already gives results that approximate a PFR with the same residence time, provided the conversions required are not excessive. In Figure 3.7, some comparative results are given for various values of N.

The outcome that a large number of CSTRs gives the same result as a PFR can easily be understood when we consider that in a single-stage CSTR there is a small chance that reactants leave the reactor without having the time to react. Adding a

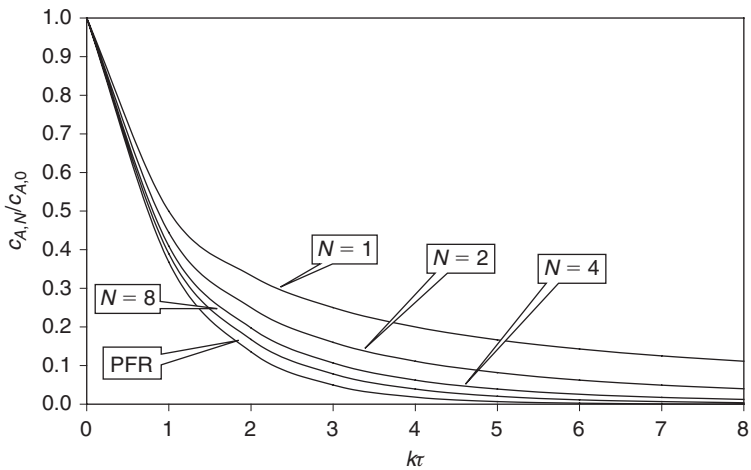

Figure 3.7 Relative conversion as a function of the dimensionless time $k\tau$.

second CSTR diminishes this chance, although the overall residence time remains the same. Adding subsequent CSTRs virtually eliminates the chance of "short circuiting" of reactants, and for the conversions given in Figure 3.7 we see that the results of the PFR can hardly be distinguished from that of eight CSTRs in series having the same overall residence time.

3.3 APPLICATIONS TO REACTOR DESIGN

If we include coke ovens as a typical batch reactor in our definition of gasification, then practically all of these idealized reactor forms have been applied at some time or other in the search for an optimum gasifier design. Of course, what is optimum in any particular case is heavily dependent on the application in hand (chemical or power), the nature of the feedstock, the size of the plant, and a number of other factors, as well as the classical trade-off between investment and operating costs. It is therefore not surprising that representatives of most reactor forms still find commercial application today. The various basic gasification processes are discussed against this background and that of the basic theoretical models of PFR and CSTR in Chapter 5, where the implications for some of the commercial processes are also shown.

3.3.1 Modeling

The systems described in this chapter are extremely complex, which has to date placed limitations on the application of kinetic models to commercial gasification reactor design. Nonetheless, "the availability of increasingly powerful computers with a deeper understanding of the physical and chemical processes of coal combustion now enables the development and use of greater sophistication in the models employed" (Williams *et al.*, 2002). In particular, applications are emerging where their incorporation into computational fluid dynamics (CFD) is proving to be of practical material benefit.

The most important practical applications to date from the knowledge of actual coal kinetics are in the field of combustion, particularly in the field of NO_x prediction. However, although CFD already has an important place as a design aid in describing the combustion of coal in utility furnaces, increasing demands are being made to provide quantitative rather than qualitative results (Williams *et al.*, 2002).

Progress is now being made in applying CFD to gasification. In their discussion of the application of CFD to burner developments for Lurgi's MPG oil gasification burner, Hofmockel and colleagues (2000) describe kinetic models for bulk and pore diffusion. (This is further detailed in Ulber, 2002.) An example from their results of CFD is given in Figure 3.8.

Bockelie *et al.* (2002) have presented initial results for various entrained-flow coal gasifiers, illustrating, for example, performance variations when using different feedstocks. This work is part of an ongoing program to investigate generic improvements for operation and design of such gasifiers.

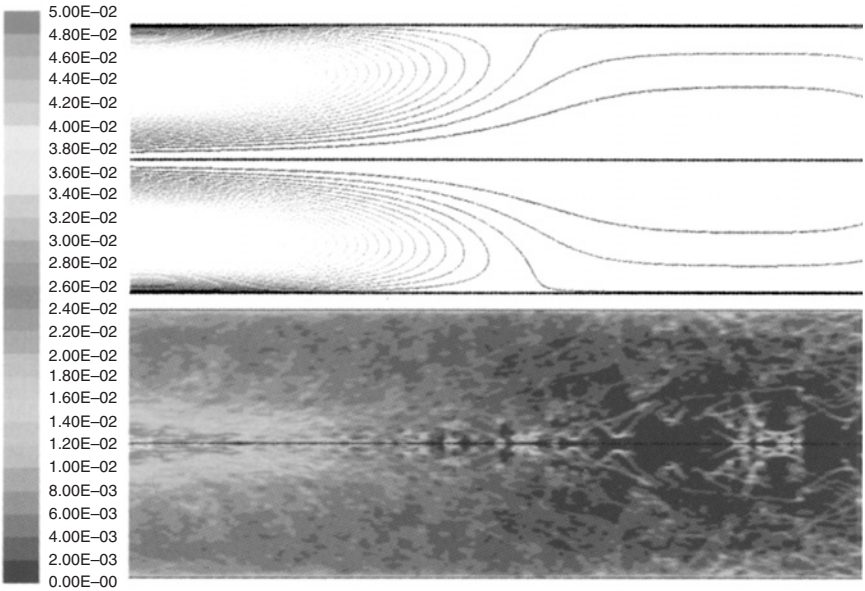

Figure 3.8 CFD Model of a gasification burner outlet zone (source: Hofmockel *et al.*, 2000).

The complexity of kinetic calculations ensures that any practical quantitative results are only likely to be accessible via CFD, and will therefore remain the realm of the specialist. Current developments in this field are encouraging, even if the path ahead is still a long one. Optimization of burners and reactor design, as well as their influence on one another, is the area most likely to be a fruitful field of application in the near future.

REFERENCES

Bockelie, M.J., Denison, M.K., Chen, Z. *et al.* (2002). "CFD modelling for entrained flow reactors". Paper presented at Gasification Technologies Conference, San Francisco, 27–30 October.

Bürkle, S. (1998). "Reaktionskinetische Charakterisierung abfalltypischer Stoffe und deren Verbrennung in einem Drehrohrofen unter Sauerstoffanreicherung". PhD dissertation, Engler-Bunte-Institut der Universität Karlsruhe (TH).

Ergun, S.B. (1956). Kinetics of the reaction of carbon dioxide with carbon. *Journal of Physical Chemistry*, 60: 480–485.

Hedden, K. (1961). Die Bedeutung der Reaktionsfähigkeit des Brennstoffs für koksbeheizte Schachtöfen. *Chemical Engineering Science*, 14: 317–330.

Hofmockel, J., Liebner, W. and Ulber, D. (2000). "Lurgi's multipurpose gasification application and further development". Paper presented at IChemE Conference, Gasification 4 the Future, Noordwijk, April.

Jüntgen, H. and van Heek, K.H. (1981). *Kohlevergasung*. Munich: Thiemig.

Reimert, R. and Schaub, G. (1989). Gas Production. In: *Ullmann's Encyclopedia of Industrial Chemistry*, 5th edn.,Vol A 12. Weinheim: VCH Verlagsgesellschaft, 1989, pp. 215.

Smoot, L.D. and Smith, P.J. (1985). *Coal Combustion and Gasification*. New York: Plenum.

Ulber, D. (2003). "Modellierung der Flugstromdruckvergasung von Öl-Rückständen". PhD dissertation, Rheinisch-Westfälische Technische Hochschule, Aachen.

Westerterp, K.R., van Swaaij, W.P.M. and Beenackers, A.C.C.M. (1987). *Chemical Reactor Design and Operation*. New York: John Wiley & Sons.

Williams, A., Pourkashanian, M., Jones, J.M. and Skorupska, N. (2000). *Combustion and Gasification of Coal*. New York: Taylor & Francis.

Williams, A., Backreedy, R., Habib, R. *et al*. (2002). Modeling coal combustion: the current position. *Fuel*, 81: 605–608.

This page intentionally left blank

Chapter 4

Feedstocks and Feedstock Characteristics

4.1 COALS AND COKE

Approximately 2930 MMtoe/y (toe = tonnes of oil equivalent, approximately 42 GJ or 1.5 t hard coal or 3 t lignite) of coal is consumed each year (BP, 2006). Of this, about 35 MMt/y is gasified to produce 150 million Nm^3/d of synthesis gas (Simbeck and Johnson, 2001). Roughly half of this gas is generated in the Sasol synfuels plants in South Africa, where the synthesis gas is used for the production of liquid hydrocarbons and other chemicals. Most of the remainder of this gas is used for ammonia production and – in China – for the production of town gas.

The total proven reserves of coal amount to 909×10^9 t world wide. Coal consumption was stable over the period 1991–2001, but has increased at about 6% per year since then, predominantly in China (27% annual rate of increase 2001–2005) and India (6%). Coal consumption in North America and Europe has continued to remain stable over this period. Nonetheless, it plays an important part in the thinking of many long-term energy strategies, despite its contentious role in the production of CO_2 as a greenhouse gas. The reason for this can be seen from the figures in Table 4.1. The ratio of reserves to current production (R/P ratio) is 155. In other words, at current consumption rates the world's reserves will last 155 years. Compare this with 65 years for natural gas and 41 years for oil. Furthermore, the reserves are more evenly distributed than oil (62% of reserves in the Middle East) or natural gas (67% in the Middle East and Russia).

The composition of coals is very complex, and the types of coal differ considerably. The detailed petrographic composition of the organic part of coals, often characterized by a so-called maceral analysis, has little influence on most gasification processes, and the interested reader is referred to the many treatises on this subject (see, for example, Speight, 1983; Smoot and Smith, 1985; Kural, 1994). Important for gasification are the age of the coal, its caking properties, its water content and its ash properties.

Table 4.1
World coal reserves by region

Region	% of total reserves	R/P ratio
North America	28.0	231
South and Central America	2.2	269
Europe/Eurasia[1]	31.6	241
Africa and Middle East	5.6	200
Asia/Pacific	32.6	92
World	100	155

Source: BP, 2006.
[1]Europe/Eurasia: Europe plus former Soviet Union.

Table 4.2
Classification of coals

Class	Volatile matter (wt%)	Fixed carbon (wt%)	Heating value (HHV) (MJ/kg)
Anthracite	<8	>92	36–37
Bituminous	8–22	78–92	32–36
Sub-bituminous	22–27	73–78	28–32
Brown coal (lignite)	27–35	65–73	26–28

4.1.1 Formation of coal

All coal has been formed from biomass. Over time, this biomass has been turned into peat. When covered under a layer of overburden, the influence of time, pressure and temperature converts this material into brown coal or lignite. Subsequently, the latter material will turn into sub-bituminous coal, then into bituminous coal, and finally into anthracite. Coal is often classified in terms of its rank, which increases from brown coal to anthracite. The classification of coal by rank for ash- and moisture-free coal is given in Tables 4.2 and 4.3. Figure 4.1 provides an alternative presentation. Brown coal, lignite and sub-bituminous coals are designated as low-rank coals, whereas higher-rank coals are often called hard coals. The terms *brown coal* and *lignite* are essentially synonymous, lignite being used more often in the United States and brown coal in Europe and Australia.

Table 4.3
Classification of coals

Class		Fixed carbon (wt%)	Higher heating value BTU/lb (MJ/kg)	Agglomerating character
I. Anthracitic	1. Meta-anthracitic	≥98		Non-agglomerating
	2. Anthracite	92–98		
	3. Semi-anthracite	86–92		
II. Bituminous	1. Low-volatile bituminous coal	78–86		
	2. Medium-volatile bituminous coal	69–78		Commonly agglomerating
	3. High-volatile A bituminous coal	<69	≥14,000 (≥32.6)	
	4. High-volatile B bituminous coal		13,000–14,000 (30.3–32.6)	
	5. High-volatile C bituminous coal		11,500–13,000 (26.8–30.3)	Agglomerating
III. Sub-bituminous	1. Sub-bituminous A coal		9,500–10,500 (22.1–24.4)	
	2. Sub-bituminous B coal		8,300–9,500 (19.3–22.1)	Non-agglomerating
	3. Sub-bituminous C coal		8,300–9,500 (19.3–22.1)	
IV. Lignitic	1. Lignite A		6,300–8,300 (14.7–19.3)	
	2. Lignite B		<6,300 (<14.7)	

Source: ASTM D388, 1999.

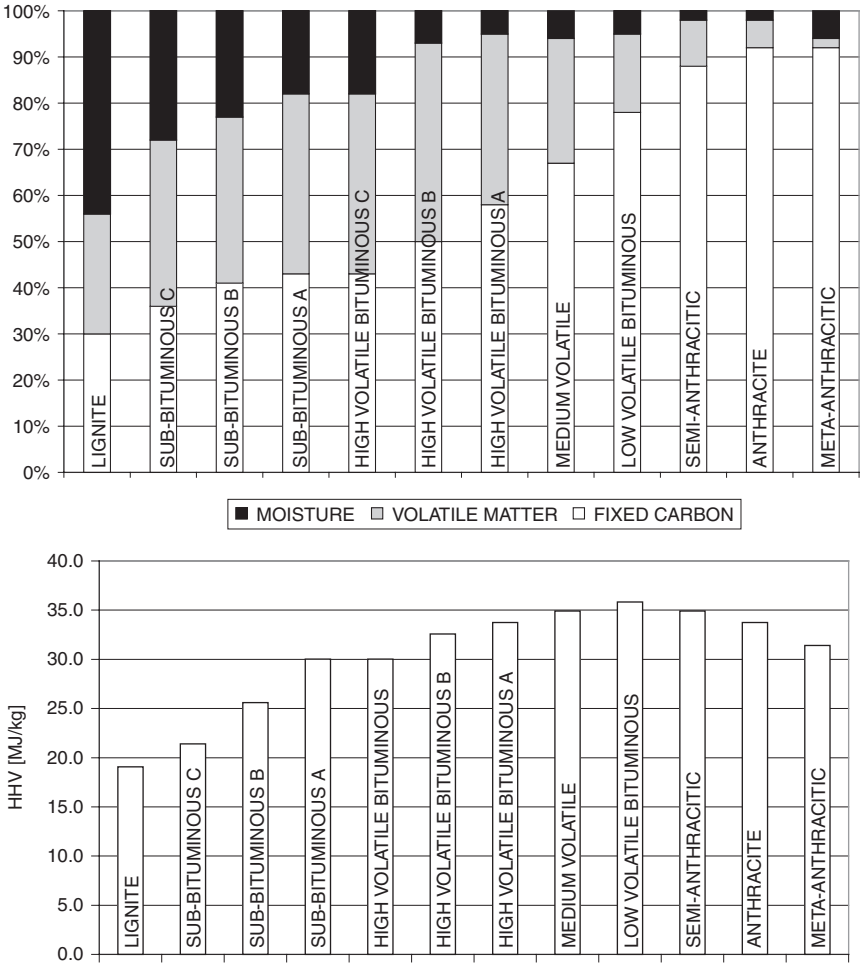

Figure 4.1 Proximate analyses and higher heating value of coals by rank (source: Baughman, 1978).

4.1.2 Coal analysis

The methods generally used for specifying the analysis of coals have developed along pragmatic lines, and are aimed at providing a useful guide to coal users rather than a purely chemical approach. The two types of analyses for any coal are the proximate analysis and the ultimate analyses.

Proximate analysis

The proximate analysis determines the moisture, volatile matter, ash and fixed carbon in the coal (see Figure. 4.1). The analysis is an essentially practical tool providing an initial indication of the coal's quality and type. The methods for performing these

analyses have been standardized by all the major Standards Institutions (e.g. ASTM, ISO, DIN, BS, and others). These standards, though similar in nature, are different from one another in, for example, the temperature specified for determining the volatiles content, so it is important when providing data to specify the method used.

Moisture is determined by drying the coal under standard conditions for 1 h at 104–110°C. The method determines the sum of all moisture – that is, both the surface moisture caused by rain and so on, and the inherent moisture. The inherent moisture is the water that is very loosely bound in the coal. It can vary from a few percentage points in anthracite to 60–70% in brown coal. (Equilibrium moisture is defined by ASTM D1412, BS1016 part 21; bed/inherent moisture by ASTM D3173, DIN 51748.)

Volatile matter is determined by heating the coal in a covered crucible for a defined time at a defined temperature (e.g. 7 min at 950°C to ASTM). The loss in mass minus the mass of the moisture represents the mass of the gaseous constituents formed by the pyrolysis under the conditions mentioned. (ASTM D3175, BS 1016 part 104, DIN 51720.)

Ash is the inorganic residue that remains after combustion of the coal. It consists mainly of silica, alumina, ferric oxide, lime, and smaller amounts of magnesia, titanium oxide and alkali, and sulfur compounds. (ASTM D3174, BS 1016 part 104, DIN 51719.)

Fixed carbon is determined by subtracting from 100 the mass percentages of moisture, volatile matter and ash (ASTM D3172). It should be remarked that fixed carbon is an artificial concept, and does not mean that this material was present in the coal as pure carbon in the beginning.

Although the proximate analysis tells the expert a lot about the coal, for gasification it is mandatory also to have the ultimate analysis at our disposal, since it provides data on elemental composition of the hydro-carbonaceous part of the coal.

Ultimate analysis

For the ultimate analysis, the percentages of carbon, hydrogen, oxygen, sulfur and nitrogen are determined. In the past, oxygen was sometimes reported as "by difference". If at all possible this should not be accepted, as it makes it impossible to have any control over the quality of the analysis. Proper balances are the basis for a good process design and a good operation of plants, but a good balance is equally dependent on a good elemental analysis. (Carbon and hydrogen ASTM D3178, BS1016 part 106: Nitrogen ASTM D3179, BS1016: Sulfur ASTM D3177, BS1016 part 106.)

Table 4.4 lists proximate and ultimate analyses of various types of coal.

The relevance of *sulfur* in the coal for gasification is the same as for oil-derived heavy residual feedstocks, which generally contain more sulfur than most coals, and are described in section 4.2. Sulfur contents in coal range from 0.5–6 wt%. It may be present in coal in three forms: pyritic sulfur, inorganic sulfates, and as sulfur in organic compounds. These three forms of sulfur can be determined using ASTM D 2492. In coals with a high sulfur content, most of the sulfur is generally present in the form of pyrite. Note that the quantity of pyritic sulfur is an indicator for potential abrasiveness of the coal.

Table 4.4
Analyses of various coals

Coal			Proximate analysis, % mass ar				Ultimate analysis, % mass on maf coal					LHV
Country	Region	Rank	Fixed carbon	Volatile matter	Water	Ash	C	H	O	N	S	maf coal MJ/kg
Germany	Rhein	Brown coal	17.3	20.0	60.0	2.7	67.5	5.0	26.5	0.5	0.5	26.2
USA	North Dakota	Lignite	27.8	24.9	36.9	10.4	71.0	4.3	23.2	1.1	0.4	26.7
USA	Montana	Sub-bituminous	43.6	34.7	10.5	11.2	76.4	5.6	14.9	1.7	1.4	31.8
USA	Illinois	Bituminous	39.3	37.0	13.0	10.7	78.4	5.4	9.9	1.4	4.9	33.7
Poland	Typical	Bituminous	54.9	35.6	5.3	4.2	82.8	5.1	10.1	1.4	0.6	36.1
S. Africa	Typical	Bituminous	51.3	32.7	2.2	13.8	83.8	4.8	8.4	2.0	1.0	34.0
China	Datung	Bituminous	50.9	28.1	11.9	9.1	84.4	4.4	9.5	0.9	0.8	33.4
India	Typical	Bituminous	30.0	23.0	7.0	40.0	75.5	6.4	15.2	1.5	1.4	32.1
Australia	Typical	Bituminous	44.9	41.1	4.5	9.5	81.3	5.8	10.0	2.0	0.9	33.8
Germany	Ruhr	Anthracite	81.8	7.7	4.5	6.0	91.8	3.6	2.5	1.4	0.7	36.2

ar, as received; maf, moisture-and-ash-free.

The *nitrogen* content in coals ranges from 0.5–2.5 wt%. Only part of the nitrogen in the coal is converted into ammonia and HCN upon gasification; the remainder is converted into elemental nitrogen. The presence of the coal-derived nitrogen in the product gas is the reason why it is not always essential to gasify coal with very pure oxygen (>99 mol%), even when the gas is used for the production of syngas or hydrogen. The percentage of the nitrogen in the coal that is converted into elemental nitrogen upon gasification will depend on the type of nitrogen compounds in the coal.

4.1.3 Other minerals in coal

Beyond the elements described above, which are provided with every ultimate analysis of coal, it will be found that a substantial part of the periodic table can be shown to be present in coals. These other elements can be divided into macro components, the presence of which is usually given in wt%, and micro or trace elements, which are only present at ppm levels. Values from a sample coal within the typical range are given in Table 4.7.

The *chlorine* content in coal is mostly well below 1 wt%; however, in some coals it may be as high as 2.5 wt%. In combination with a low nitrogen content in the coal, this will result in a high caustic consumption in the wash section of a gasifier.

Chlorides have three possible detrimental effects in the plant:

1. Chlorides have a melting point in the range 350–800°C; they deposit in the syngas cooler and foul the exchanger surface. The first indication of this is an increase in the syngas cooler outlet temperature.
2. In the reactor, chlorides can react with the hydrogen present to form HCl, which will decrease the pH of the wash water or condensate.
3. Chlorides may also form NH_4Cl with high nitrogen feeds. With such feedstocks, the chloride deposits as NH_4Cl in the economizers at temperatures below about 280°C. Further, as an aqueous solution this leads to severe chloride stress corrosion in stainless steels that are used, for example, in burners and instrument lines.

Coals also contain *phosphorus*, but this has less significance for gasification than, for instance, for the steel industry. Phosphorus can cause severe fouling in heat exchangers downstream of the gasifier. Although in coal itself the phosphorus content is not a problem it may become a problem when starting to include biomass wastes with a high phosphorus content in the feedstock.

Basis of reporting analyses

It is important for the users of analytical data of coal to be able to convert various types of analysis into each other. Apart from the difference in units used, which can readily be transferred into each other, there are problems associated with the basis for the analysis. The proximate analysis and the ultimate analysis may be given based

on the so-called as-received (ar) coal – that is, the coal including moisture and ash. When doing so, it is also important to record whether the sample was taken direct from storage or air dried before analysis, since the difference between total and inherent moisture cannot be determined. But it is also possible to get these analyses on a moisture-and-ash-free (maf) basis, a moisture-free (mf) basis or an ash-free (af) basis. Furthermore, the heating value may be the higher heating value (HHV) or the lower heating value (LHV). In relation to the latter, it should be kept in mind that the HHV of steam and water are positive and zero respectively, and that the LHV of steam and water are zero and negative respectively. A program is included on the companion website to convert given data for proximate and ultimate analysis, as well as for the heating value on any basis (ar, af, mf, maf and HHV or LHV) into any other basis.

4.1.4 Other properties

Heating value

The heating value is obtained by combustion of the sample in a calorimeter. If not available, the heating value can be calculated with, for example, the Dulong formula (Perry & Chilton, 1973, 9.4) from the ultimate analyses:

$$\text{HHV in MJ/kg} = 33.86*C + 144.4*(H - O/8) + 9.428*S$$

where C, H, O and S are the mass fractions of the elements obtained from the ultimate analysis. There are other formulae for calculating the heating value from the ultimate and/or proximate analyses (see, for example, Channiwala and Parikh, 2002):

$$\text{HHV in MJ/kg} = 34.91*C + 117.83*H - 10.34*O - 1.51*N + 10.05*S - 2.11*\text{Ash}$$

It is always useful to calculate the heating value from these analyses, as it is a good cross-check on measured values. If the deviation is more than a few percent, all analyses must be checked.

Caking and swelling properties

An important other property of a coal is the swelling index. The swelling index is determined by heating a defined sample of coal for a specified time and temperature, and comparing the size and shape taken by the sample with a defined scale. There are a number of different scales defined in, for example, ASTM D 720-91, BS 1016 (Gray-King method) or ISO 335 (Roga method). The swelling index is an indicator for the caking properties of a coal and its expansion on heating. Softening/caking does not occur at a precise temperature but over a temperature range. It is an important

variable for moving-bed gasifiers and fluid-bed gasifiers. For the gasifiers of entrained-flow systems, the coal softening point has no relevance. However, the softening point may limit the amount of preheating of the pulverized coal feedstock used in dry coal feed gasifiers.

Hardness

Physical properties are not very relevant for the operation of a gasifier as such. The hardness of the coal is, for example, mainly important for the milling and grinding upstream of the gasifier. The hardness of a coal is usually dependent on the nature and quantity of its ash content, although ash-free anthracite is also hard. A high ash content or a very high hardness of the ash in the coal can make a feedstock unattractive for entrained-flow gasification because of the high cost of milling and grinding. Ashes with high silica and/or alumina contents have a high hardness. The hardness is generally characterized by the Hardgrove grindability index (ASTM D409).

Density

The density is primarily of importance for the transport of the coal. In this connection it is important to discriminate between the particle density and the bulk density of the coal. The bulk density is always lower, as is shown in Table 4.5.

Table 4.5
Comparison between particle and bulk density for various coals

Fuel	Density (kg/m^3)	
	Particle (true)	Bulk (apparent)
Anthracite	1450–1700	800–930
Bituminous coal	1250–1450	670–910
Lignite	1100–1250	550–630

4.1.5 Ash properties

Melting and fluid properties

For all gasifiers, the ash-softening and ash-melting or fusion temperatures are important variables. For fluid-bed gasifiers, these properties govern the upper operating temperature at which agglomeration of the ash is initiated. For entrained-flow slagging gasifiers, it is essential to ensure that the ash flows continuously and that the slag tap does not freeze up. The method for determining these temperatures is

specified in ASTM D1857, "Fusibility of Coal and Coke Ash", or similar specifications such as ISO 540. In these methods the temperatures measured relate to the behavior of an ash sample under specified conditions, and are reported as IDT (initial deformation temperature), ST (softening temperature), HT (hemispherical temperature) and FT (fluid temperature). For gasifier applications, the ash melting characteristics should be determined under reducing conditions, as these data may differ considerably from data for oxidizing conditions (generally, but not universally, lower).

An additional property required for slagging gasifiers is the slag viscosity–temperature relationship. It is generally accepted that for reliable continuous slag tapping a viscosity of less than 25 Pa·s (250 Poise) is required. The temperature required to achieve this viscosity is often designated as T_{25} (or T_{250}).

As the liquid slag cools, the viscosity will initially increase linearly with the logarithm of the temperature. There is a temperature, known as the critical temperature (T_{cv}), at which this relationship changes and the viscosity rises more steeply. This is the temperature at which a degree of crystallization of some of the components begins and the slag enters the plastic intermediate zone between the liquid and solid phases. For some ("friendly") slags the initial deviation from the linear relationship is relatively gentle, for other ("unfriendly") slags the rise in viscosity below the T_{cv} is rapid. For a slagging gasifier to operate at a reasonable temperature, it is necessary for the slag to have a $T_{cv} < 1400°C$. For an "unfriendly" slag it is necessary to operate the gasifier at a higher safety margin to the T_{cv} than with a "friendly" slag.

A simplified relationship between the ash fluid properties and chemical composition is shown in Figure 4.2, which plots typical T_{25} temperatures against the base–acid ratio $(CaO + MgO + Fe_2O_3 + Na_2O + K_2O)/(SiO_2 + Al_2O_3 + TiO_2)$. The lowest slagging temperatures are achieved when the base and acid components in the ash are more or less in balance. Thus in general slags that are high in silica and/or alumina will have high ash melting points, but this is reduced by the presence of both iron and calcium – hence the use of limestone as a flux. However, where the calcium content is high (as in some German brown coals), there can be some advantage to reducing the base–acid ratio by adding SiO_2. The relationship is in fact more complicated, since the base–acid ratio treats each base and each acid with an equal weighting, which is not strictly correct. At a low base–acid ratio, for instance, SiO_2 will raise the T_{25} more than the same amount of Al_2O_3 (Stultz and Kitto, 1992). Patterson and colleagues (2002) have worked on developing fluxing strategies to reduce T_{cv} temperatures based on the quaternary SiO_2–Al_2O_3–CaO–FeO.

Properties of some typical ashes are given in Table 4.6.

In dry ash moving-bed gasifiers and in fluid-bed gasifiers, coals with a high ash melting point are preferred, whereas in slagging gasifiers, coals with a low ash melting point are preferred.

The caking properties of a coal and the melting characteristics of its ash are the reason that there are forbidden temperature ranges that have to be taken into

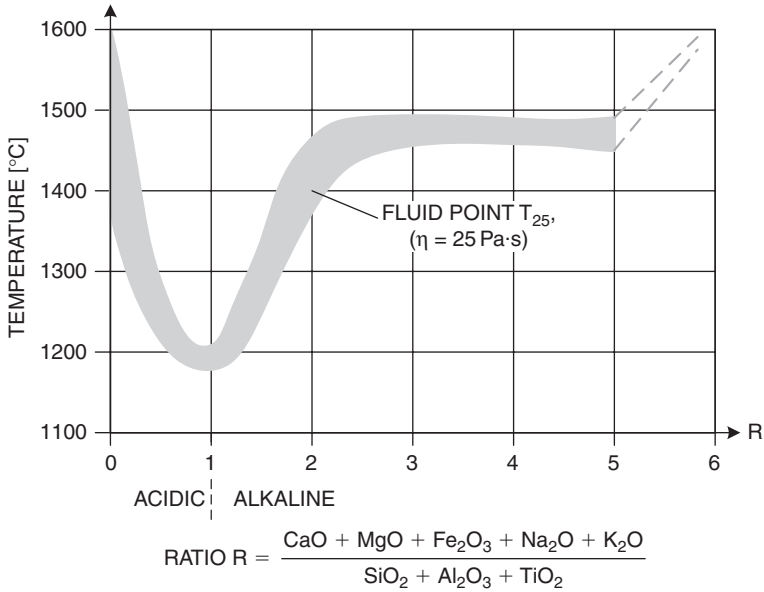

Figure 4.2 Fluid temperature of slags as a function of base–acid ratio.

account, both in design and during operation. In entrained-flow gasifiers, only the ash properties are important.

The ash that is produced in gasifiers always has a lower density than the minerals from which it originates, due to loss of water, decomposition of carbonates and other factors, and the presence of some carbon. The bulk density of the ash in particular may be low due to the formation of hollow ash particles (cenospheres). This means that special attention has to be given to the transport of such ashes.

Slag is very different from ash, as it has been molten and is in fact a fusion-cast material similar to glass. Ideally, slag becomes available as an inert, fine, gritty material with sharp edges due to the sudden temperature drop upon contact with a water bath. Because lumps of solid slag will form during process upsets, a slag breaker is sometimes installed between the water bath and the slag depressurizing system.

Chemical composition of ash

In Table 4.6, some of the major components of various ashes are given. Apart from these, there are many trace components present that do not contribute much to the melting characteristics of the ash but have a major effect on the environmental problems associated with coal use – for example, mercury, arsenic, zinc, lead, cadmium, chromium, chlorine and fluorine. Most of the elements as given in Table 4.7, which were present in one particular coal, can appear at least in part in the ash.

Table 4.6
Ash fluid temperatures and analysis

Coal	Ash melting point		Analysis of ash as oxides (wt%)									
	Reducing °C	Oxidizing °C	SiO_2	Al_2O_3	TiO_2	Fe_2O_3	CaO	MgO	Na_2O	K_2O	SO_3	P_2O_5
Pocahontas No. 3 West Virginia bituminous	IDT>1600	IDT>1600	60.0	30.0	1.6	4.0	0.6	0.6	0.5	1.5	1.1	0.1
Ohio No. 9 bituminous	1440	1470	47.3	23.0	1.0	22.8	1.3	0.9	0.3	2.0	1.2	0.2
Illinois No. 6 bituminous	1270	1430	47.5	17.9	0.8	20.1	5.8	1.0	0.4	1.8	4.6	0.1
Pittsburgh, West Virginia bituminous	1300	1390	37.6	20.1	0.8	29.3	4.3	1.3	0.8	1.6	4.0	0.2
Utah bituminous	1280	1320	61.1	21.6	1.1	4.6	4.6	1.0	1.0	1.2	2.9	0.4
Antelope Wyoming sub-bituminous	1270	1260	28.6	11.7	0.9	6.9	27.4	4.5	2.7	0.5	14.2	2.3
Texas lignite	1230	1250	41.8	13.6	1.5	6.6	17.6	2.5	0.6	0.1	14.6	0.1

Source: Stultz and Kitto, 1992.

Table 4.7
Detailed chemical analysis of minerals in a sample coal (ppmw)

As	21	La	17
B	35	Mn	84
Ba	130	Mo	1.6
Be	1.2	Ni	10
Br	1.5	Pb	14
Cd	0.07	Rb	2.1
Ce	24	Sb	0.57
Co	3.5	Sc	2.9
Cr	7.0	Se	3.1
Cs	0.30	Sm	1.4
Cu	9.2	Sr	316
Eu	0.32	Th	8.4
F	227	Ti	0.43
Ge	0.50	U	2.1
Hf	1.8	V	17
Hg	0.13	W	0.73

4.1.6 Coke

Coke can be considered as a material consisting essentially of the fixed carbon and the ash in the coal. In the past much coke was generated as a by-product of town gas production, and had the advantage of being essentially volatiles free. Under these circumstances it was a common fuel in water gas plants. Today it is more expensive than coal, so that anthracite is generally the preferred fuel. It is virtually never used in modern gasification plants. Coke plays a very important role in blast furnaces, which may be considered as very large gasifiers (Gumz, 1950). One of the main reasons to use coke in blast furnaces is that it is much stronger than coal or the iron ore.

4.1.7 Petroleum coke

Petroleum coke, more often named petcoke, is increasingly considered as an attractive feedstock for gasification, in particular as it becomes more and more difficult to fire this high-sulfur material as a supplemental fuel in coal-fired power stations. The feed systems and gasifiers for petcoke are similar to those for pulverized coal, and gasifiers designed for coal have switched to petcoke with success – as, for example, in Wabash (100%) and Polk (about 50%). The reactivity of petcoke is lower than that of coal, so that either a higher temperature or a larger residence time is required

to achieve the same carbon conversion. Fluid coke has a higher C/H ratio than delayed coke and it is less reactive. The behavior of native petcoke ash in gasifiers is very similar to that of heavy oil fractions. When gasified in entrained-flow slagging gasifiers with a cooled membrane wall, it is essential to add ash, because otherwise the build-up of a proper slag layer on the wall will not be successful (Mahagaokar and Hauser, 1994). In the Elcogas plant in Puertollano, petcoke is processed together with (high-ash) coal (Sendin, 1994). Fluxing of the ash is also required for refractory lined reactors, to ensure a liquid slag.

4.2 LIQUID AND GASEOUS FEEDSTOCKS

In 2002, some 154 million Nm³/d of synthesis gas was produced by partial oxidation of liquid or gaseous feeds (SFA Pacific, 2001; Simbeck and Johnson, 2001; Table 4.8). If fed to state-of-the-art IGCC units, this would generate some 11,500 MW_e. By far the largest portion of this synthesis gas (about 80%) is generated from refinery residues, typically visbreaker vacuum bottoms or asphalt. The most important product from these plants is ammonia (Table 4.9). Methanol is also important, but refinery hydrogen and power applications via IGCC are rapidly increasing (Figure 4.3). Most plants with gaseous feed are small units for the production of CO-rich synthesis gases, especially for the production of oxo-alcohols. The largest single operating gas-fed plant is the Shell unit at Bintulu, Malaysia, which serves as the front end for a synfuels plant using Fischer-Tropsch technology. Shell's Pearl project in Qatar, currently under construction, is about 10 times the size and will produce about 140,000 bpd of Fischer-Tropsch liquids.

Table 4.8
Liquid and gaseous gasification capacities

	Number of reactors	Syngas production (MM Nm³/d)	Approximate feed rate
Liquid feed	142	124	42,000 t/d
Gaseous feed	41	31	10.9 MM Nm³/d
Total	183	155	

Source: SFA Pacific, 2001.

4.2.1 Refinery residues

Over 95% of liquid material gasified consists of refinery residues. Being a high temperature, non-catalytic process, partial oxidation is by and large flexible with regard to feedstock quality, and does not make great demands on the specification of a liquid feed. However, every feedstock needs to be evaluated to ensure that design aspects are

Table 4.9
Applications for gasification of liquid and gaseous feedstocks

	Synthesis gas from:		Total syngas (MM Nm³/d)	Approximate product rate
	liquid feeds (MM Nm³/d)	gaseous feeds (MM Nm³/d)		
Ammonia	50.5	0.8	53.7	6.93 MMt/y
Methanol	15.3	6.3	21.7	3.01 MMt/y
Hydrogen	7.1	2.0	9.0	12.50 MMNm³/d
Synfuels	–	7.6	7.6	
Other chemicals	9.4	12.4	21.9	
Power	34.3	–	34.3	2554 MW_e
Other	4.7	1.6	6.2	
Total	123.7	30.6	154.3	

Source: SFA Pacific, 2001.

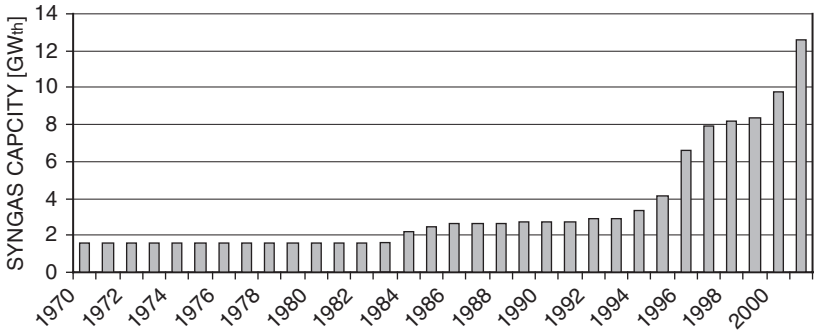

Figure 4.3 Growth of hydrogen and power applications for gasification of liquid and gaseous feedstocks (from SFA Pacific, 2001).

correctly selected for its particular requirements. Generally, any feedstock would need to fulfill the following requirements:

- The fuel *per se* must be single phase at the reactor burner inlet. Small amounts of gas in a predominantly liquid feed may ignite close to the burner, causing damage at that point. Droplets of liquid in a predominantly gaseous phase feed can lead to erosion and premature wear of equipment. This does not pose a limitation for most feedstocks, but must be considered in the design of the preheat train. It is important in this connection, however, to ensure that abrasive solids are kept to a minimum.

- The feedstock must be maintained within certain viscosity limits at critical points in the plant, such as at the burner. Again, this is generally a matter that can be addressed in the design of the feed transport and preheat systems, and will not place any limitation on choice of feed.
- Too high a level of certain components in the ash, such as a high sodium content, limits the use of a syngas cooler, since the sodium salts deposit on the exchanger surface. Details are discussed under "Sodium" below.

The term "refinery residue" covers a wide range of materials, some of which are solid at ambient temperatures and others that are liquid under these conditions. Common to all is their origin in being the product of distillation and possible subsequent treatment of crude oil. The most common residues are obtained by thermally cracking (visbreaking) vacuum residue or by subjecting it to solvent de-asphalting.

The specifications in Table 4.10 show typical gasifier feeds having a high sulfur content, high metal contents and high viscosities (Posthuma *et al.*, 1997). The data for oil sands bitumen, which are discussed in section 4.2.2, are also included.

Table 4.10
Typical refinery residue specifications

Feedstock type		**Visbreaker residue**	**Butane asphalt**	**Oil sands bitumen**
Elementary analysis				
C	wt%	85.27	84.37	85.36
H	wt%	10.08	9.67	6.89
S	wt%	4.00	5.01	6.20
N	wt%	0.30	0.52	1.20
O	wt%	0.20	0.35	0.10
Ash	wt%	0.15	0.08	0.25
Total	wt%	100.00	100.00	100.00
C/H	kg/kg	8.3	8.7	12.4
Vanadium	mg/kg	270–700	300	<1500
Nickel	mg/kg	120	75	<400
Iron	mg/kg	20	20	
Sodium	mg/kg	30	30	
Calcium	mg/kg	20	20	20
Viscosity (100°C)	cSt	10,000	60,000	5,250 (200°C)
Density (15°C)	kg/m³	1100	1070	1100
LHV	MJ/kg	39.04	38.24	36.75

C/H ratio

The C/H ratio of heavy refinery residues can vary between about 7 kg/kg (vacuum residue) and 10 kg/kg (asphalts), depending on crude source and refining history. There are no specific limitations on the C/H ratio for gasification, but of course it does have an effect on syngas quality.

If all other conditions are maintained equal, the feeds with a higher C/H ratio will produce a synthesis gas with a lower H_2/CO ratio. Whether this is an advantage or a disadvantage will depend on the application.

Sulfur content

Typically, the sulfur content of a residue can vary between 1 and 7%. In exceptional cases, such as in parts of China, material with as little sulfur as 0.15% is gasified.

A sulfur content over this range has little effect on the design or operation of a gasifier, but is an important issue for the design of the subsequent gas treating. A low sulfur content gives rise to a low H_2S/CO_2 ratio in the sour gas from the acid gas removal unit, and this can be decisive for the design of the sulfur recovery unit. Selective physical washes such as Rectisol can be designed to concentrate the H_2S in the sour gas, and with a low sulfur feed this would be necessary. Equally, low sulfur feeds can have surprising effects on a raw gas shift catalyst. This catalyst requires to operate in the sulfided state, and if insufficient sulfur is available to maintain this, then the catalyst can lose activity (BASF, undated). Again, it is perfectly possible to design around this by including a sulfur recycle. It is therefore good practice to consider the low sulfur case carefully when specifying the basis of design for a new plant.

Corrosion effects in a residue gasifier, which can be connected with the presence of sulfur, are in most cases independent of the actual content of sulfur, and it is important to look at what other circumstances are contributing to the corrosion. In the event of, for example, high temperature sulfur corrosion, the solution to the problem will lie in avoiding the high temperatures rather than trying to lower the sulfur content of the feed.

Nitrogen content

The refining process concentrates the nitrogen present in the crude oil into the residue. Nonetheless, there is seldom more than 0.6 wt% nitrogen in a gasifier feedstock. Much of the nitrogen entering the reactor as part of the feedstock is bound in organic complexes, and under the gasifier conditions reacts with the hydrogen to form ammonia and hydrogen cyanide. The more nitrogen there is contained in the feed, the more ammonia and cyanide will be formed. For details, see section 6.9.2.

Ash content

The ash content of typical feedstocks is summarized in Table 4.10. The evaluation of the feed must be done on the basis of both individual ash components, as well as

the total ash content. The most critical and most common components are discussed in the following sections.

Satisfactory experience with ash contents up to 2000 mg/kg has been achieved. Individual plants have run with even higher ash contents (Soyez, 1988).

Vanadium

Experience with up to 700 mg/kg vanadium is available, and in one case up to 3500 mg/kg, at the reactor inlet. With the exception of residues from some Central and South American crudes, feedstocks with over about 350 mg/kg are unusual. Many residues from Far East crudes have an order of magnitude less than this.

Vanadium as a feed component has a number of undesirable properties:

- In an oxidizing atmosphere vanadium is present as V_2O_5, which has a melting point of 690°C (Bauer *et al.*, 1989). At temperatures higher than this, V_2O_5 diffuses into refractory linings, whether of a reactor or a boiler fired with a high-vanadium fuel such as carbon oil (see next point), and destroys the refractory binder. In a reducing atmosphere (i.e. in normal operation for a gasification reactor) vanadium is present as V_2O_3, which has a melting point of 1977°C and is therefore not critical. For plant operation, the lesson is that special care should be taken during heat up and after shut down, when the reactor could be subject to an oxidizing atmosphere at temperatures above 700°C (Collodi, 2001).
- When combusted in a conventional boiler, a fuel with a high vanadium content will cause slagging and fouling on economizer heat-transfer surfaces. Where soot from the gasifier is admixed to oil (carbon oil) for external firing in an auxiliary boiler, this sort of fouling can be a particular problem. With 700 mg/kg vanadium in the boiler feed, cleaning of the surfaces may be required as often as once or more per year.
- Problems with burners and syngas coolers have also been reported when operating with over 6000 mg/kg vanadium in the reactor feed (Soyez, 1988). This high level of vanadium in the feed is, however, extremely unusual.

The vanadium content should also be looked at in combination with the sodium content. In unfavorable circumstances sodium vanadate can be formed, which has a much lower melting point that that of V_2O_3 and can form deposits on the heat-exchange surfaces of syngas coolers.

Nickel

There is no generally recognized upper limit for nickel in gasifier feedstocks. Nickel does, however, have an important influence on the gas treatment. In the presence of carbon monoxide and under pressure, nickel and nickel sulfide both form nickel carbonyl, a gaseous compound that leaves the gasification as a component of the synthesis gas. This topic is handled in more detail in section 6.9.8.

It is also worth noting that nickel sulfide can react to form $NiSO_4$ in the wash water when the latter comes into contact with air. The $NiSO_4$, goes into solution in the water and can then be recycled to the scrubber, where it can increase the amount of carbonyls formed.

Sodium

Sodium can be present in the gasification feedstock either as sodium chloride or as sodium hydroxide. The sodium leaves the reactor as sodium chloride, or as sodium carbonate where the origin is sodium hydroxide, which have melting points of 800°C and 850°C, respectively (Perry and Chilton, 1973). In plants where the synthesis gas is cooled by raising steam in a heat exchanger, these salts deposit on the heat-exchange surface. The most serious effect is fouling of a large section of the surface, causing an increase in exchanger outlet temperature. The deposition can, however, also accumulate locally to the extent that there is a significant increase in pressure drop. It is therefore desirable to ensure that the sodium content does not exceed 30 mg/kg, or at the maximum 50 mg/kg. It is our experience that as much as 80 mg/kg in a feed that had been contaminated with seawater caused the outlet temperature of a syngas cooler to rise at more than 1°C per day.

Fortunately, the sodium chloride fouling is a reversible phenomenon, and operation with a sodium-free feed will cause the outlet temperature to reduce again, even if not quite to the value prevailing before the sodium ingress. Full recovery requires a steam out.

Sodium compounds – and for that matter compounds of other alkali metals – have the additional unpleasant property that they diffuse into the refractory lining of the reactor, where they effect a change in the crystal structure of the alumina from α-alumina to β-alumina, which leads in turn to a gradual disintegration and loss of life of the refractory.

For most refinery applications the sodium limitation is not a restriction, since the desalting process in the refinery effectively maintains the sodium level within allowable limits. In cases where a high sodium content is expected on a regular and steady basis, then quench cooling is preferable to a syngas cooler.

Calcium

Typically there may be some 6–20 mg/kg calcium in a refinery residue. Calcium can react with the CO_2 in the synthesis gas to form carbonates. This does not normally present any problems. Where significantly more calcium is present, these carbonates can precipitate out of the quench or wash water depositing in the level indicators, possibly with disastrous results if not recognized in time. Continuous flushing of the instrument connections with decarbonated water is generally a satisfactory antidote. A certain degree of depositing on the surface of syngas coolers is also possible (Soyez, 1988).

Iron

The iron content of the feed can be as high as 50 mg/kg, but is generally lower. The behavior of iron is similar to that of nickel. Carbonyl formation in the synthesis gas takes place at a lower temperature than for nickel. This is discussed in more detail in section 6.9.8.

Silica

Silica can find its way into refinery residues from a number of sources, as sand, catalyst fines from a Fluid Catalytic Cracker (FCC) or from abraded refractory. Typically there may be between 20 and 50 mg/kg in the residue, which can be tolerated. Larger quantities can cause two types of problem. First, silica is an abrasive material that largely passes into the water system, where it settles out to some extent. In recycle systems, it is partly mixed with the feedstock, increasing the quantity being fed to the reactor. Abrasion has been reported on the feedstock charge pumps as a result (Soyez, 1988). Silica entering the system as FCC catalyst fines can also deposit close to the burner area of the reactor with the risk of disturbing the flame pattern in the reactor.

Additionally, there is the problem that under the reducing conditions in the reactor silica is reduced to volatile SiO according to the reaction

$$SiO_2 + H_2 = SiO\uparrow + H_2O$$

The SiO condenses at about 800°C while cooling in the syngas cooler and deposits on the exchanger surface. This is one reason why all gasifiers use a low silica high alumina refractory lining (Crowley, 1967).

Chloride

Chloride in the feedstock is mostly present as NaCl. Smaller quantities may also be present as K-, Fe-, Cr-, Ca- and Mg-compounds.

Although large quantities of chlorides will damage the plant, the limitation of the main source, NaCl, to 30 ppmw Na is usually sufficient to limit the overall chloride intake.

The potential problems of fouling or corrosion associated with chlorides are described in section 4.1.

Naphthenic acids

Naphthenic acids can be present in residues to a greater (e.g. those derived from Russian crudes) or lesser extent. While this is not of importance for the gasification process itself, it can be an important evaluation criterion, since it would need to be considered in the selection of metallurgy for the feedstock transport system.

Viscosity

Many refinery residues have an extremely high viscosity and are (subjectively) solid, having the consistency of street bitumen at ambient temperatures. Since the viscosity decreases considerably with increased temperature, it is often desirable to transport and store this material in a heated condition.

The temperature dependency of viscosity takes the form of the Walther equation (Große *et al.*, 1962, L4):

$$\log(\log(v + c)) = m^* \ (\log(T_0) - \log(T)) + \log(\log(v_0 + c))$$

where v (cSt) is the kinematic viscosity at absolute temperature T (K), m is a constant for any given oil characterizing the temperature dependency of the viscosity, and c is a constant.

This equation can be plotted as a straight line in a log(log(v)) vs log(T) diagram such as Figure 4.4. Ideally, m can be determined from two reference temperatures for which the viscosity is known, since it is the gradient of the straight line joining the two points on the diagram. From this it is possible to use the value of m to determine the viscosity at any other desired temperature.

For cases where the viscosity at only one temperature is known, a correlation for m is required. Singh and colleagues (1993) have developed such a correlation. A short program to calculate the viscosities of the feed on the basis of both one and two reference temperatures is included on the companion website.

The viscosity is an important parameter in the design of a gasification system, since the effectiveness of atomization at the burner is dependent on viscosity limits. Values

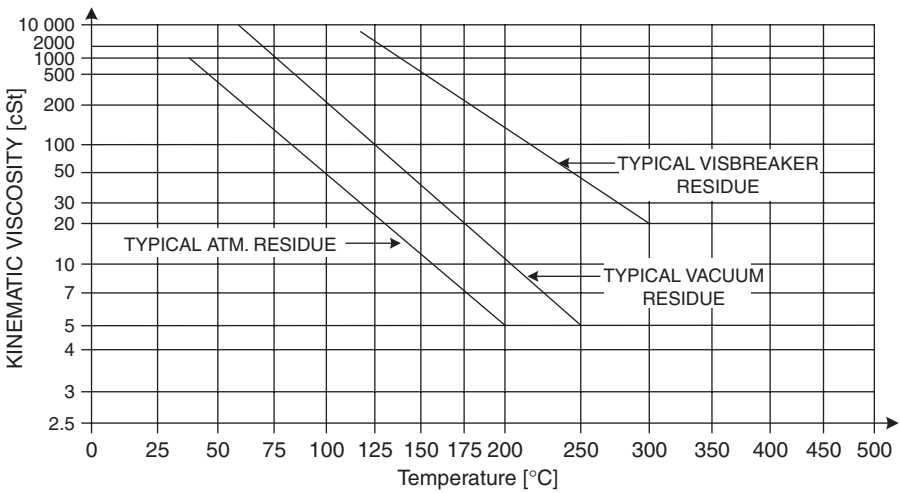

Figure 4.4 Viscosity–temperature relationship for heavy residues.

of 20 cSt–300 cSt can be found in the literature (Supp, 1990; Weigner *et al.*, 2002). The exact values depend on the individual burners, so licensors must be consulted for any specific project. In general, the desired temperatures required to achieve the prescribed temperature range can be achieved by steam heating, which is in most cases preferable to a fired heater, since the metal temperatures are lower and there is less tendency for the feed material to crack in the preheater.

If during operation the feed preheaters should fail, leading to an increase in viscosity, the tendency will be that the atomization deteriorates and an increase in the soot make can result.

Pour point

The pour point is the second important property for the feedstock transport system. It provides an indication of the lowest temperature to ensure pumpability and avoid solidification of the feed in the line.

Since the transition from solid to liquid is gradual, there are a number of different defined points in the transition, which are shown in Figure 4.5. The pour point is defined as the lowest temperature at which the oil will pour or flow under defined standard conditions (ASTM D-97).

When evaluating the transport properties of a feed, it is insufficient to look at the pour point in isolation. Two sample feeds illustrate this:

	Feed A	Feed B
Pour point	60°C	70°C
Viscosity at 100°C	50 cSt	2,500–25,000 cSt

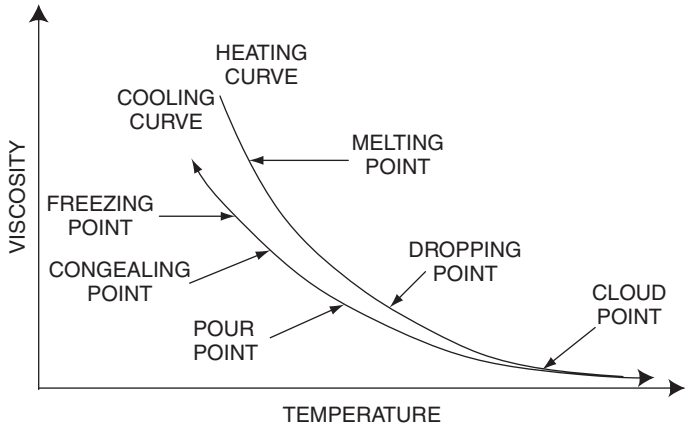

Figure 4.5 Pour point (source: Baader, 1942).

In the case of Feed A, with only a slight increase of temperature above the pour point, the feed flowed sufficiently easily that no problems ever occurred on loss of steam tracing. Bringing the steam tracing back on line was sufficient to unblock the pipe. This would have been a considerable problem in the case of Feed B, so a flushing system was included as part of the original design. The reason is that Feed A is a feedstock with a high percentage of paraffins which, once they are molten, have a low viscosity. Feedstock B has a so-called viscosity pour point where heat must be applied until the required low viscosity is reached, and no use can be made of a state transition.

Density

Densities of typical gasifier feedstocks lie between 970 and 1250 kg/m^3. There are no limitations imposed by gasifier performance or design.

Figure 4.6 shows the relationship between temperature and density for different oils. This correlation is also included in the companion website.

Flash and ignition temperatures

The flash point is the temperature at which sufficient hydrocarbons have evaporated that an explosive mixture is formed which can be ignited by an external ignition source.

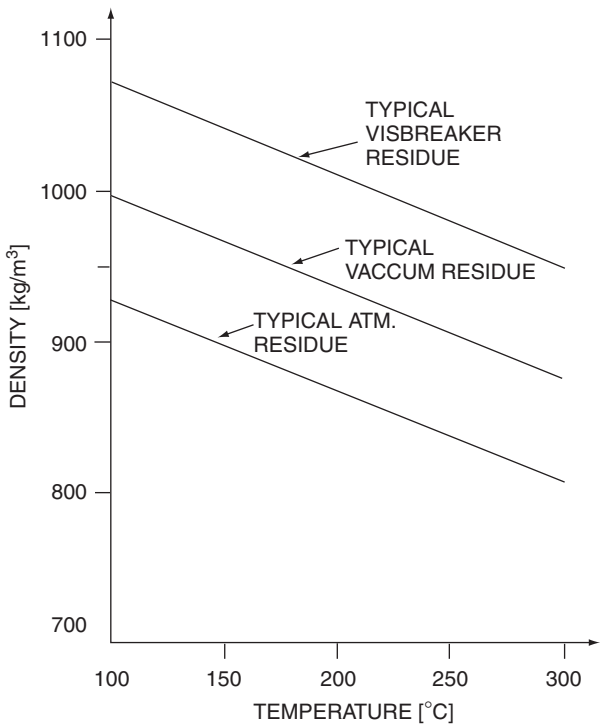

Figure 4.6 Density–temperature chart.

There are two methods commonly used for determination of the flash point: the Cleveland open-cup method (ATSM D 92) and the Pensky-Martin closed-cup method (ASTM D 93). Using the open-cup method a certain amount of the evaporating hydrocarbons is lost to the surroundings, which leads to a relatively high value for the measured flash point. The closed-cup method uses a closed vessel with a narrow neck so that all the hydrocarbons that evaporate remain part of the potentially ignitable mixture. The difference between the two methods is about 30°C, i.e. the closed-cup method will provide a value about 25–30°C lower than the open-cup method.

In contrast to the flash point, for which an external ignition source is used, the ignition point (ASTM D 874) is that temperature at which the hydrocarbon begins to burn without any external ignition source.

The flash point places an upper limit to the preheat temperature of a gasifier feedstock. If material is preheated to its flash point, then there is a danger that it will ignite immediately on exiting the burner and damage it. A damaged burner can in turn change the design flame pattern, causing local stoichiometric combustion with associated high temperatures and the potential for reactor containment failure. A suitable safety precaution is to maintain the preheat temperature 50–100°C lower than the flash point.

Generally, there is no need to preheat to anything like the flash point of normal residues, since the viscosity is already sufficiently low for good atomization at substantially lower temperatures. Problems can arise, however, with blended feedstocks. If, for instance, FCC light cycle oil is added to a heavy asphalt to reduce its viscosity, then the light material might have a flash point at a temperature required to achieve an acceptable viscosity of the blend at the burner.

Conradson carbon

The Conradson carbon (ASTM D 189) is determined by placing a feed sample into a container and heating it to a given temperature, so that it cracks. The Conradson carbon value is given by the amount of cracked residue expressed as a percentage of the original sample.

The Conradson carbon value is not used expressly in gasifier installation design. It does, however, provide an indication of the propensity for coke formation by the residue during preheat. It can also, in connection with the C/H ratio, provide a guide to the moderating steam requirement. Additionally, it can be of use when considering the consistency of other data received for a particular feed.

Typical values for the Conradson carbon are:

Propane asphalt	35%
Vacuum residue	20%
Atmospheric residue	10%

The Ramsbottom method (ASTM D 254) provides an alternative determination of the carbon residue. A conversion chart between the two methods can be found in Speight (1998: 335).

4.2.2 Other liquid feedstocks

Orimulsion

Orimulsion is the trade name for an emulsified bitumen–water mixture produced from the bitumen fields in the Orinoco belt of Venezuela. Orimulsion consists of about 70% bitumen and 30% water, and contains about 1% surfactants. The emulsifying technology converts the bitumen into a transportable fuel with a pour point of 3°C and a viscosity of about 200°cP at 30°C. It has a net calorific value of 27.8 MJ/kg (Marruffo *et al*., 2001).

Technically, Orimulsion is a petroleum product; it contains sulfur, vanadium and nickel in substantial quantities, and these behave just as in a conventional residue. The sodium content is low (12 mg/kg), assuming that there is no contamination during transport. The differences of Orimulsion when compared to a refinery residue are in the water content and the surfactant used. The water content causes a considerable loss of efficiency, since energy is used in its evaporation. The resulting syngas has a CO_2 content of about 10% compared with around 3% in unquenched syngas generated from a conventional residue. Early formulations of Orimulsion contained considerable quantities of magnesium, which could have presented problems similar to those caused by calcium. The newest formulation, Orimulsion 400, has a magnesium content of 6 mg/kg, which is sufficiently low to prevent these.

When designing for or operating with Orimulsion, it is necessary to take specific precautions (e.g. reduced preheat temperatures) to avoid the emulsion breaking. A handbook of suitable handling guidelines can be obtained from the suppliers.

Orimulsion was tested as a gasification feedstock in Texaco's Montebello (California) pilot facility in 1989 with apparent success. The producer of Orimulsion, Bitumenes Orinoco S.A. (Bitor), claims to be able to supply the material at a price to allow competitive production in a gasification plant, but there is no recorded commercial application at this time (2007).

Oil sands residues

Oil sands are deposits of heavy hydrocarbons located in a sandstone matrix, which are not amenable to conventional pumping technology. The largest and most well-known deposits are in northern Alberta, Canada. Other deposits exist (in approximate order of size) in Venezuela, the United States of America (Utah, Texas, California, Kentucky), Russia (Olenek), Madagascar and Albania, as well as in other locations in Canada (Melville Island).

Oil sands represent a major hydrocarbon resource, with an estimated 450 billion barrels of recoverable reserves (Speight, 1998: 117), but the difficulties and cost of extraction have limited commercial exploitation in the past. At present there are only two commercially operating plants, both in the Athabasca River area of northern Alberta. A number of pilot operations for the development of improved extraction techniques exist, also mostly in this area, and a number of commercial projects are currently under development (Parkinson, 2002).

The processing of oil sands can be described in three principle steps:

1. Extraction, for which there are two fundamentally different approaches. One is to mine the bitumen-laden sandstone and transport it to a central extraction plant, where the sandstone and bitumen are separated by a hot-water extraction process (HWEP). The commercial operations of Syncrude and Suncor are both based on this method. Alternative methods have been developed for *in situ* extraction and separation, such as steam-assisted gravity drainage (SAGD). There are pilot plants in operation which demonstrate the possibilities of this approach, and at least one current gasification project is based on it (see below).
2. Primary conversion, for which conventional or modified coking, cracking or solvent deasphalting processes are applied.
3. Secondary conversion, which is essentially a hydrotreating step.

The residue from the primary conversion can be used as gasifier feedstock to provide hydrogen for the secondary conversion. The analysis of a typical liquid residue is included in Table 4.10. Existing operations do not do this, and generate their hydrogen by steam reforming of natural gas. The residue is in the form of coke, which is landfilled unused. However, where or when natural gas availability is critical, gasification can become a serious option. A first oil sands SAGD project incorporating residue gasification is under construction at Long Lake for Opti Canada and due to start up in early 2008 (Rettger *et al*., 2006). Others are in various stages of planning and engineering.

Work has been performed on the characterization of residues from oil sands (Zhao *et al*., 2001).

From the point of view of gasification, these investigations have highlighted a number of important and interesting aspects (Table 4.11). The extremely high

Table 4.11
Bitumen solids yields and metals analysis for BS free oil sand asphalt

Material and recovery process	BS (wt%)	V (ppm)	Ni (ppm)	Al (ppm)	Ca (ppm)
Athabasca mine (HWEP) before BS removal	0.9	820	210	640	1400
Athabasca mine (HWEP) after BS removal		880	280	200	110
Athabasca mine (Toluene extracted)	0.5	650	240	150	100
Athabasca (SAGD)	n.d.	1270	444	14	80
Nigeria	2.1	104	148	n.a.	n.a.
Utah	1.4	21	170	n.a.	n.a.

Reproduced from Zhao *et al*. (2001), with permission from Elsevier.

vanadium and nickel contents are a feature of the Canadian material. These values exceed current long-term experience for fresh feed in gasifier operations. In particular, it would be important to avoid a recycle configuration for the carbon management system so as to avoid metals build-up in the circuit. The second interesting feature is the quantity of bitumen solids (BS) observed in the mined material, which is absent in that recovered by SAGD. These solids are typically ultra-fine aluminosilicate particles originating from clay inclusions in the sandstone structures that are brought into the processing plant by the inherently non-selective mining processes. Experience with gasification of conventional residues where catalyst fines from an FCC unit has shown a tendency for such material to deposit in both gasifier and syngas cooler. The bitumen produced by the SAGD process is practically free of ultra-fine solids, which makes it far more suited as a gasifier feedstock.

Liquid organic residues

Some gasifiers process organic residues from petrochemical processing, such as the manufacture of oxo-alcohols, and have done so successfully for many years. The only important consideration is that such residues may contain catalyst fines. Depending on catalyst and/or carrier, this may have an abrasive effect on critical equipment or cause fouling or plugging as described above for refinery residues.

Coal tar

The MPG process (see section 5.4.3) was originally developed for coal-based tars generated in a plant using Lurgi moving-bed gasifiers to gasify lignite. It has been in successful operation in such service since 1969 (Hirschfelder *et al*., 1997; Liebner, 1998).

Other oil-processing gasifiers have taken in coal tar in order to reduce feedstock costs. Such attempts at mixing coal tar and petroleum-derived residues have not generally been successful. The principle difficulty is the incompatibility of the different types of ash, which tend to form eutectica. The result is plugging either of the throat area in a quench reactor or of the tube bundle in a syngas cooler.

Spent lubricating oil

Spent lubricating oil is included here as a potential gasifier fuel more to warn against it than to encourage its use. Used lubricating oil can contain typically 1500 mg/kg each of lead and zinc. The lead content can be as much as 10 000 mg/kg. Lead and zinc sulfides solidify at temperatures of 700–800°C, and will block syngas coolers and the throats of quench reactors. Soyez (1988) reports that "some 100 ppm was sufficient to plug the waste heat boilers completely within only seven days". Other similar cases are also known, although one plant with a quench reactor has been reported as having had successful operation. Nonetheless, the only sound advice concerning gasification of spent lubrication oil is: don't.

4.2.3 Natural gas

Compared with the variety of aspects needing evaluation when dealing with liquid feeds, natural gas is relatively simple, and the principle issues to be considered are more of an economic rather than a technical nature. For the production of hydrogen-rich synthesis gas it is generally more economic to employ steam reforming rather than partial oxidation. Partial oxidation of natural gas is only likely to demonstrate favorable economics for hydrogen production where no purpose-built oxygen plant is required, or where the hydrogen is a by-product of carbon monoxide production. The advantage of partial oxidation – namely that, as a non-catalytic process, no large amounts of steam are required to prevent carbon laydown on the catalyst – only comes into its own when a CO-rich syngas is required. Further details are discussed in section 7.1.4.

Since most applications for partial oxidation of natural gas aim at a CO-rich synthesis gas, quenching hot gas in water – advantageous if a CO shift is desired – is economically unattractive, and most such plants employ a syngas cooler.

There is no specific requirement on the hydrocarbon content of the natural gas. Clearly, heavier gases with high ethane or propane content will produce a synthesis gas richer in CO than pure methane. When looking at the still heavier components of natural gas, however, it is really only necessary that they be gaseous at the burner.

Nitrogen is a component in natural gas which passes through the reactor largely as an inert. The amount of nitrogen (or argon) allowable in the feedstock is governed purely by the synthesis gas specification. This is different from the CO_2 case. CO_2 is a partner in the partial oxidation reactions, and will increase the CO yield from the gas. This will be favorable in many instances, but must be reviewed on a case-by-case basis.

In contrast to catalytic processes such as steam reforming or autothermal reforming, partial oxidation is tolerant of sulfur. In fact, there are good reasons to accept sulfur into the partial oxidation reactor. First, the synthesis gas has a high partial pressure of carbon monoxide so that in the absence of large quantities of steam there is considerable potential for metal dusting corrosion (Posthuma *et al.*, 1997) – more so than with the equivalent steam reformer (see section 6.11 for details). The most effective form of protection against metal dusting is sulfur in the gas (Gommans and Huurdeman, 1994).

The second advantage of leaving the sulfur in the gas is to prevent a spontaneous methanation reaction in the synthesis gas.

4.2.4 Other gaseous feedstocks

Refinery gas

Refinery gas has been used as a feedstock for partial oxidation. Although partial oxidation cannot usually compete with steam reforming for hydrogen production

from natural gas, the situation can be different with a refinery gas feed. Refinery waste gas streams can contain considerable quantities of olefins, which would need to be hydrogenated upstream of a steam reformer. The partial oxidation route is not sensitive to the presence of unsaturates in the feed, and this flexibility can provide opportunities (Ramprasad *et al.*, 1999).

Attention needs to be paid to the issues of metal dusting and methanation, as with natural gas, but if there is no sulfur in the feed then other solutions are possible, such as using a quench reactor if hydrogen is to be the end product.

FT off-gas

Fischer-Tropsch off-gas is essentially similar to many refinery off-gas streams in that it can contain significant quantities of unsaturated hydrocarbons. The same considerations apply. Where the main syngas generation for the FT-synthesis is partial oxidation of natural gas, there is the need to be careful only with the recycle of inerts (Higman, 1990). This is, however, a limitation imposed by the synthesis process and not by the partial oxidation itself.

Coke oven gas

There are two recorded plants using coke oven gas as a feedstock. Coke oven gas is available only at low pressure. This makes the economics unfavorable in all but the most exceptional cases.

4.3 BIOMASS

The term "biomass" covers a broad range of materials that offer themselves as fuels or raw materials and which have in common that they are all derived from recently living organisms. This definition clearly excludes traditional fossil fuels since, although they also derive from plant (coal) or animal (oil and gas) life, it has taken millions of years to convert them to their current form. For the purpose of this book, we have chosen to include all agricultural and forestry wastes as well as purpose-grown material, as biomass thus clearly including animal refuse such as poultry litter. There is still a potential overlap between what is classified as waste and what as biomass. We have considered human sewage sludge as well as wastes from industrial processes as waste. Black liquor, an intermediate material in the paper industry with important fuel use, is treated here as biomass.

Although biomass is not a major industrial fuel, it supplies 15–20% of the total fuel use in the world. It is used mostly in non-industrialized economies for domestic heating and cooking. In industrialized countries, the use of biomass as a fuel is largely restricted to the use of by-products from forestry and the paper and sugar industries. Nonetheless, its use in industrialized countries is being encouraged as part of a strategy for CO_2 abatement.

4.3.1 Properties of biomass

The properties of biomass are as diverse as the sources from which they come.

Vegetable biomass

Typical data for some vegetable biomasses are included in Tables 4.12 and 4.13. Quaak and colleagues (1999) give a range of bulk density of 150–200 kg/m^3 for straw shavings and 600–900 kg/m^3 for solid wood.

Table 4.12
Properties of various biomasses

Biomass	HHV (MJ/kg)	Moisture (wt%)	Ash (wt%)	Sulfur (wt% dry)	Chlorine (wt% dry)
Charcoal	25–32	1–10	0.5–6		
Wood	10–20	10–60	0.25–1.7	0.01	0.01
Coconut shell	18–19	8–10	1–4		
Straw	14–16	10	4–5	0.07	0.49
Ground nut shells	17	2–3	10		
Coffee husks	16	10	0.6		
Cotton residues (stalks)	16	10–20	0.1		
Cocoa husks	13–16	7–9	7–14		
Palm oil residues (shells)	15	15			
Rice husk	13–14	9–15	15–20		
Soya straw	15–16	8–9	5–6		
Cotton residue (gin trash)	14	9	12		
Maize (stalk)	13–15	10–20	2 (3–7)	0.05	1.48
Palm oil residues (fibres)	11	40			
Sawdust	11	35	2		
Bagasse	8–10	40–60	1–4		
Palm oil residues (fruit stems)	5	63	5		
Bark				0.07	0.49

Derived from Quaak *et al.*, 1999; Arbon, 2002.

Table 4.13
Analysis of typical biomass

Proximate analysis			**Ultimate analysis**	
Volatile matter	wt% maf	>70	C, wt%	54.7
Ash	wt% ar	1.5	H, wt%	6.0
Moisture	wt% ar	20	O, wt%	38.9
Fixed carbon	wt% ar	<15	N, wt%	0.3
			S, wt%	0.1

Table 4.14
Ash components in various biomasses as wt% of total ash

	Straw	**Miscanthus**	**Wood**
CaO	6.5	7.5	37.3
MgO	3.0	2.5	8.5
Na_2O	1.3	0.2	3.0
K_2O	23.7	12.8	8.6

Source: Klentsch, 2001.

Ash properties. The major difference between biomass and coal ashes is that for the majority of biomasses the ash consists mainly of salts. Major components of biomass ash are potassium, calcium and phosphorus, and further sodium, magnesium, iron, silicon and trace elements. Some examples are given in Table 4.14.

As a result, biomass ashes have low ash-melting points of, for example, 800°C for some straws. Because these ashes are extremely aggressive towards refractory materials – K_2CO_3 can be used to dissolve minerals before further analysis – biomass does not generally lend itself for slagging gasification unless it is mixed with large quantities of coal.

Animal biomass

Although biomass is often interpreted as vegetable biomass, animal-derived biomass remains an energy source that should not be totally ignored, even if its production is largely determined by developments in the agricultural and food sector. In order to provide an idea of the volumes involved, it should be noted that the annual production of

waste by poultry is 8 kg/head. Pigs produce about 300 kg/y, beef cattle 900–1200 kg/y, and dairy cattle 1200–2000 kg/y (Smil, 2001).

In the SCGP coal gasifier in the NUON plant in Buggenum in the Netherlands, trials have been carried out with the gasification of mixtures of coal with up to 12% poultry litter and/or municipal sewage sludge. Plans to gasify up to 30% non-coal feedstocks were realized in 2004 (Kanaar and Wolters, 2002). It should be mentioned that the percentages of alternative feedstocks are generally given as a mass percentage. As an energy percentage, these figures are at least 50% lower.

Abattoir waste has also been co-gasified in the Puertollano plant, up to an amount of 4.5% of total feed. The meat and bone meal which is classified as a risk material was divided into specific-risk material (SRM), consisting of spinal marrow, bones, intestines, spleen or brain, and high-risk material (HRM), which is other parts of the animals, and blood material. When this material was fed as 4.5% of the total feed, the high chlorine content made itself noticeable in the wet scrubber system, where "a progressive increase in chlorate [sic] compounds" was observed (Schellberg and Garcia Peña, 2002). Some typical properties of animal biomass are given in Table 4.15.

Table 4.15
Properties of animal biomass

	HHV (MJ/kg)	Moisture (wt%)	Volatiles (wt%)	Ash (wt%)
Meat and bone meal (SRM)	20.1	2.54	65.27	26.13
Meat and bone meal (HRM)	18.9	5.03	63.7	25.54
Meat and bone meal (blood)	23.3	14.96	93.82	1.45
Meat and bone meal (MBM)	20.0–28.0			
Poultry litter	13.0–14.0	63	25	20

Source: Arbon, 2002; Bajohr, 2002; Schellberg and Garcia Peña, 2002.

4.3.2 Black liquor

Black liquor is an integral part of the papermaking process, and represents about half the mass of the wood entering the pulping plant. It is the principal source of energy for the pulping process. In addition to the lignin and hemicellulose from the pulp wood it also contains the cooking chemicals, which contain significant quantities of sodium and sulfur, the recovery of which for recycling to the pulp digesters is essential for the economy of the process.

Total black liquor production worldwide is an energy resource of about 600 TWh/y or 51 million toe/y. This represents about 0.5% of the total world energy consumption. In a country such as Sweden, with a strong pulping sector, black liquor can be

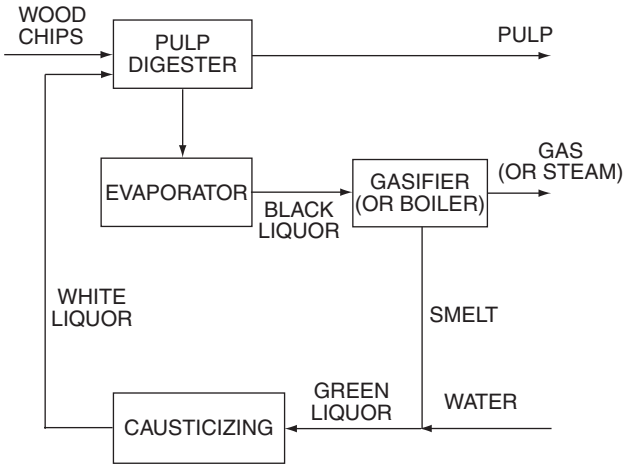

Figure 4.7 Black liquor gasification in the pulp process.

as much as 6% of the national gross energy consumption. An average-sized mill produces 1000 air-dried tonnes of pulp per day, generating some 1800 tDS/d (tonnes dry solids per day) of black liquor. On an HHV basis, this is about 300 MW_{th}.

In a typical pulping process (see Figure 4.7), wood chips are cooked with sodium hydroxide and NaHS in a pulp digester where lignin and other organic material, which contributes almost half the mass of the wood, is dissolved into the white liquor containing the caustic. The solids content of the weak black liquor leaving the digester is about 15 wt%. This is increased to about 70 wt% in evaporators to leave a combustible pumpable material that in traditional processes is completely combusted in a special (black liquor) recovery or Tomlinson boiler. The inorganic material, mostly NaS and $NaCO_3$, leaves the boiler as a smelt that is recovered by causticizing for reuse in the digester.

The use of black liquor gasification is a relatively new development. It is located in the same position in the liquor circuit as the boiler (see Figure 4.7). In some applications black liquor gasifiers have been built in parallel with existing boilers as part of a de-bottlenecking project.

Typically, the strong (evaporated) black liquor has a viscosity of 70–120 cP and a density of 1400 kg/m^3. The heating value is about 13.5–14 MJ/kg (HHV).

A typical elemental analysis of the dry material in black liquor is shown in Table 4.16.

4.3.3 Biomass production

Cropping

One of the most important limitations of biomass as a widespread fuel is the space required to grow it. Bridgewater (2002) estimates that "a sustainable crop of 10 dry

Table 4.16
Composition of black liquor (dry)

Element	wt%
C	36.40
H	3.50
O	34.30
N	0.14
S	4.80
Cl	0.24
Na	18.60
K	2.02
Total	100.00

Source: Marklund, 2001.

t/ha/y of woody biomass can be produced in Northern Europe rising to 15–20 t/ha/y in Southern Europe". Assuming that 1000 dry t/y will generate 150–300 kW, then an area of 100 km^2 would be required to support a 30 to 40 MW power station.

It is unlikely that all transportation fuels and organic chemicals can in the future be produced from biomass. This would call for an immense acreage of biomass plantations of a few million square kilometers. This seems unrealistic for various reasons:

- The sheer size of such projects.
- It is far from certain that large-scale plantations of more-or-less conventional crops such as eucalyptus, miscanthus, euphorbia and other species are so "green" as the advocates of these plantations claim them be. The large-scale biomass production in Minas Gerais in Brazil for making charcoal to be used in blast furnaces is a well-known environmental problem. Fertilizers, herbicides and pesticides will be required; ash may have to be recycled in order to recycle alkali, phosphorus, and so on. Irrigation may be a problem, and so may soil erosion. Moreover, monocultures are very sensitive to pests. Last but not least, such developments are often difficult to reconcile with the wish for more biodiversity.
- Biomass is easy to transport when it comes to gathering firewood for nearby domestic use; however, it is expensive to transport in large quantities over any appreciable distance. The energy density of biomass is one-tenth that of liquid hydrocarbons, and further, it is a solid that cannot be pumped. In order to make wood and other biomass more amenable to transport it can be chipped, but then the energy density will decrease even further. As a result, the energy required to get bulk biomass to usually distant markets is appreciable, and constitutes a sizeable percentage of the fuel market it wants to replace.

Biomass waste

On the other hand, there are circumstances where large quantities of waste biomass arise as a result of some other economic activity such as forestry, papermaking and sugar-refining. Under these circumstances, most of the costs associated with the collection of the biomass and its transport to a central location is borne by the main product. Thus, in these areas, somewhat larger biomass gasifiers (500–1000 t/d corresponding to 80–160 MW_{th}) can and have been built. However, none of these are of a capacity to be compared with world-scale plants, based on fossil fuel feedstocks, of 200–1000 MW_{th}.

4.3.4 Development potential

Bio-oil

The major drawback of biomass is that the energy density is an order of magnitude lower than that of crude oil (see Table 4.17). When it is further considered that biomass for fuel is a difficult-to-handle solid (grain is an exception in that it almost flows like water), this implies that fuel biomass can never be shipped economically over long intercontinental distances.

Therefore, when contemplating really large biomass production, the first conversion that has to take place is that of the biomass into a transportable product. The best way to accomplish this is by flash pyrolysis, which is a fast pyrolysis at a high temperature of 450–475°C. In this way the solid biomass is converted into a transportable liquid with an energy density of about 20 GJ/m^3 (see Table 4.17), which is similar to that of methanol. The pyrolysis plants can be located anywhere, because they can be economically built on a reasonably small scale. A stand-alone gasifier

Table 4.17
Energy densities of various fuels

Fuel	Particle density (kg/m^3)	Bulk density (kg/m^3)	Energy density (GJ/m^3 bulk product)
Crude oil		855	35.8
Coal	1350	700	21
Natural gas (80 bar)		57	2.9
Biomass	450	230	3.7
Bio-oil		1200	20
Gasoline		760	35
Methanol		784	19

is only likely to be economic for world-scale plants, and hence they will always depend on biomass from a variety of sources. The energy conversion of flash pyrolysis is now 75%, but could well increase to 80% in the future. The bio-oil product is a transportable product that has as its only disadvantage the fact that it is corrosive due to the presence of organic acids. A big advantage is that it can be gasified with oxygen in the same commercial gasifiers that can process heavy oil fractions. An added advantage of bio-oil is that it is easily homogenized. Holt and van der Burgt proposed such a concept of decentralized flash pyrolysis plants feeding a single large gasification installation (Holt and van der Burgt, 1997; van der Burgt, 2005). Research on details of actual implementation is continuing (Henrich *et al*., 2002).

Table 4.18 lists some of the most important properties of bio-oils. Additional data, in particular of some important organic compounds in bio-oil, are contained in Henrich *et al*. (2002). In terms of its suitability for gasification in a standard oil gasifier, the most important aspects are the pH (material selection of the feed train) and the alkaline ash content. This latter may favor the use of a radiation screen instead of simple refractory lining.

Table 4.18
Typical properties of bio-oil

Property	Typical values	
Moisture content	20–30	%
pH	2–3	
Density	1200	kg/m³
C	56	wt%
H	7	wt%
O	37	wt%
N	0.1	wt%
Ash	0–0.2	wt%
Viscosity (40°C, 20% H_2O)	40–100	cP
Particulates	$<$0.3–1	wt%
Heating value	16–18	MJ/kg

Source: Meier, 2002.

Marine cropping

A possible solution to large-scale biomass production in an environmentally acceptable manner could be plantations of salt-water living organisms in desert areas that are located close to the sea. The advantage of this approach is that problems associated with fertilizers, irrigation and so on are virtually absent. Moreover, aquatic crops are probably easier and safer to harvest.

Such farms should of course be located where there is a lot of sunshine. These are also locations where solar power and hence hydrogen can additionally be generated by electrolysis of water. This in turn enables the conversion of the biomass into true hydrocarbons for transport fuels or organic chemicals to be carried out close to the biomass production, thus grossly diminishing the transport problems. In addition, the option of first converting the biomass into bio-oil by flash pyrolysis could have advantages.

For countries in the Middle East and North Africa, which are now heavily dependent on crude oil exports for their income, this would suggest that they could continue to supply the world with hydrocarbon fuels. However, other countries, such as Australia, also offer opportunities for such schemes.

Before considering biomass as a fuel, it is stressed that its primary objective in a renewables-based world is that it is the only source of concentrated carbon. This aspect is often overlooked. It is important to remember, however, because when biomass is our only make-up source for concentrated carbon, it must be made possible to convert it into a material that can be an intermediate for all organic chemicals and transport fuels. The solution is then to have a process available that can convert biomass into synthesis gas efficiently, and so provide an alternative to ethylene as the main source of organic bulk chemicals, as well as of Fischer-Tropsch products. This opens another opportunity for gasification (van der Burgt, 1997).

4.4 WASTES

"Waste" as a gasification feedstock covers a wide range of materials, both solid and liquid. Some materials that we include in this section could as easily have been included under biomass. Other chemical liquid wastes described here could also have been included in section 4.2. The selection of materials described here is, therefore, to some extent arbitrary, but it has mainly been guided by self-classification of specific projects and general tradition within the gasification industry.

One of the most difficult aspects of waste as a feedstock, whether for gasification or incineration, is its heterogeneous nature. In this connection, the interconnected properties of heating value and moisture content play an important part for both solid and liquid feeds. For solids, particle size is another key parameter. The presence of a number of components in the waste, such as sulfur, chlorides or metals, can also vary considerably. The variations can be seasonal or even daily. Even with well-defined industrial wastes, where several waste streams are fed together to the gasifier, differing proportions of the individual streams can have an influence on gasifier performance.

For these reasons, feedstock preparation plays an important role in the design of any waste gasification project. Equally important, this wide variation tends to make each project unique.

The long-term supply of the feedstock is another aspect to be considered. For this and other reasons, it is often important that the refuse is processed with a support feedstock such as coal or residual oil. Ideally, the economics of the plant should be robust even in the absence of the refuse feedstock.

In the European Union there is about 500 million tonnes/year of waste that is suitable for thermal treatment. Of this some 6% is classified as hazardous waste, which includes clinical wastes, some wastes derived from agriculture, and chemical industry wastes (Schwager and Whiting, 2002).

4.4.1 Solid waste

One of the difficulties with refuse is the variability of its chemical composition. For a study comparing various refuse incineration and gasification processes, the State Environmental Office of Nordrhein-Westfalen developed a "standard refuse" composition, which is given in Table 4.19. The lower heating value was specified as 10 MJ/kg.

Löffler (1998) reports the composition of other types of refuse as specified for a circulating fluid-bed gasifier in Rüdersdorf (see Table 4.20).

Care should be exercised, however, when evaluating such data, which is very locality-specific. In particular, local regulations on separation and recycling of household waste, including plastics, can have a dramatic effect on the heating value.

Table 4.19
"Standard refuse" in Nordrhein-Westfalen (Germany)

Composition	Mass %	Ash compostion	kg/1000 kg
C	27.16	SiO_2	110
H	3.45	Al_2O_3	34
O	18.39	CaO	31
N	0.30	Fe	30
S	0.20	Na_2O	15.2
Cl	0.50	Fe_2O_3	15
Moisture (H_2O)	25.00	MgO	4.5
Ash	25.00	Al	4
		K_2O	3
Total	100.00	Zn	1.5
		Pb	1.0
		Cu	0.5
		Cr	0.2
		Ni	0.075
		Cd	0.01
		Hg	0.005
		As	0.005

Source: Berghoff, 1998.

Table 4.20
Various feeds for a CFB refuse gasifier

		Lignite char	Coal	Old wood	Refuse	Rubber
C	wt%	9.05	78.00	43.40	40.00	64.40
H	wt%	0.55	4.61	4.77	5.69	10.62
O	wt%	1.56	4.12	30.88	29.25	5.63
N	wt%	0.13	1.14	0.23	0.79	0.76
S	wt%	0.54	0.45	0.10	0.22	1.50
Cl	wt%	0.00	0.08	0.02	0.75	0.79
Ash	wt%	78.17	9.-60	1.50	17.30	14.10
Moisture	wt%	10.00	2.00	19.10	6.00	2.20
Total	wt%	100.00	100.00	100.00	100.00	100.00
LHV	MJ/kg	3.3	31.4	15.4	15.9	34

Source: Löffler, 1998.

Feedstock sizing

Typically, solid wastes in the "as received" state have a highly irregular and asymmetrical lump size. For reasons of transport both into and within the reactor, size reduction to a fine homogeneous material is required. Drying is in most cases also a requirement, to ensure a smooth-flowing pneumatic transport.

There are a number of different approaches to pre-preparation. Most of these involve mechanical shredding and metals removal using magnetic and electric devices. Much refuse cannot be ground to a sufficient degree of fineness to permit slurry or dense phase fluid transport. Thus, mechanical transport or dilute fluidized transport are generally the only possibilities. The latter type of transport cannot be economically performed under pressure, for then relatively large amounts of carrier gas would be required, which would render the process uneconomical.

Görz (1998) has proposed an initial pyrolysis of the refuse simply to ensure a material that can then be ground to a size suitable for an entrained-flow reactor.

Moving-bed processes such as BGL have a different requirement from that of fluid-bed and entrained-flow reactors. The feedstock is transported mechanically and introduced into the reactor via lock-hoppers (which allows pressure operation), but the reactor bed can tolerate only a limited amount of fines without excessive pressure drop. Thus, a lump size of 20–70 mm is desirable. Material preparation therefore includes a pelletizing step in addition to initial shredding, metals removal and drying (Hirschfelder *et al*., 1997).

Heating value

As indicated in Tables 4.19 and 4.20, the heating value of waste material can vary considerably. The drying required to facilitate pneumatic transport will in many cases be sufficient to ensure satisfactory operation of the gasification process. It should, however, be recognized that wastes with excessive inert material cannot be gasified without a support fuel. The lower limit is 7–8 MJ/kg (Görz, 1998).

4.4.2 Liquid wastes

Organic chemical wastes

Organic wastes from chemical production vary as widely as the processes from which they originate. One published example is the feedstock to a waste gasification plant at Seal Sands (UK), built to process streams from caprolactam and acrylonitrile production. These waste streams include mixtures of nitriles and amines, as well as cyanide and ammonia compounds. The differences in the characteristics of these streams, the flow rates for which can vary independently from one another, can be observed in Table 4.21 (Schingnitz *et al*., 2000).

Other liquid wastes

Liquid wastes such as spent transformer oil can best be gasified in oil gasifiers together with heavy residual oils. The advantages of this approach are that use can

Table 4.21
Waste streams from caprolactam and acrylonitrile production

		Stream			
		1	**2**	**3**	**4**
C	wt%	62.5	36.5	18.9	25.3
H	wt%	7.4	8.5	9.4	6.6
N	wt%	23.8	19.8	7.1	11.0
S	mg/kg	90	<50	690	46,500
Cl	mg/kg	<50	<50	<50	125
Ash	wt%	<0.05	<0.05	<0.05	0.68
Moisture	wt%	6.1	27.4	62.6	35.3
Heating value	MJ/kg	30.7	21.2	8.0	8.2

Source: Schingnitz *et al*., 2000.

be made of efficient large installations and that the concentrations of, for example, chlorine remain moderate and acceptable in terms of corrosion.

Many attempts have been and are being made to dissolve polymers as plastics and rubber in oil and gasify them as a liquid rather than as a solid (see, for example, Leuna-Werke, 1995; Curran and Tyree, 1998). The attraction of gasifying plastics as a liquid with oxygen is that a quality synthesis gas is produced, which can either be used as a fuel gas in a combined cycle or as synthesis gas for methanol production, for example. The main problems are, technically, to make the liquid sufficiently homogeneous that it can be gasified using residual oil burners and, commercially, to ensure a long-term supply. Recycled plastic is generally too contaminated to allow a stand-alone project. Offcut waste from manufacturing processes, however, does offer both uncontaminated material and a better prospect for security of supply.

REFERENCES

Arbon, I.M. (2002). Worldwide use of biomass in power generation and combined heat and power schemes. *Proceedings of the Institution of Mechanical Engineers*, 216(A1): 41–57.

ASTM (1999). *Standard Classification of Coals by Rank*. Philadelphia, PA: American Society for Testing and Materials. ASTM Standard D 388-99.

Bajohr, S. Private communication. September, 2002.

Baader, A. (1942). Über "Anomalien" im Kälteverhalten der Öle. *Öl und Kohle*, 38: 432–444.

BASF technical leaflet (undated). *BASF Catalyst K 8-11*. Ludwigshafen: BASF AG.

Bauer, G., Güther, V., Hess, H., Otto, A., Roidl, O., Roller, H., and Sattelberger, S. (2003). Vanadium and Vanadium Compounds. In: *Ullmann's Encyclopedia of Industrial Chemistry*, 6th edn. Volume 35. Weinheim: VCH Verlagsgesellschaft, pp.1–21.

Baughman, G.L. (1978). *Synthetic Fuels Data Handbook*. Denver: Cameron Engineers.

Berghoff, R. (1998). Thermodynamische Bewertung der Abfallvergasungsprozesse. In: M. Born and R. Berghoff (eds), *Vergasungsverfahren für die Entsorgung von Abfällen*. Düsseldorf: Springer-VDI.

BP (2006). *BP Statistical Review of World Energy*. London: BP PLC.

Bridgewater, A.V. (2002). "Thermal conversion of biomass and waste: the status". Paper presented at IChemE Conference "Gasification – The Clean Choice for Carbon Management", Noordwijk.

Channiwala, S.A. and Parikh, P.P. (2002). A unified correlation for estimating HHV of solid, liquid and gaseous fuels. *Fuel*, 81(8): 1051–1063.

Collodi, G. (2001). "Commercial operation of ISAB Energy and Sarlux IGCC". Paper presented at Gasification Technologies Conference, San Francisco.

Crowley, M.S. (1967). Hydrogen–silica reactions in refractories. *Ceramic Bulletin*, 46(7): 679–682.

Curran, P. and Tyree, R.F. (1998). "Feedstock versatility for Texaco gasification". Paper presented at IChemE Conference "Gasification: The Gateway to a Cleaner Future". Dresden.

Gommans, R.J. and Huurdeman, T.L. (1994). "DSM's experience with metal dusting in waste heat boilers". Paper presented at AIChE Ammonia Safety Symposium, Vancouver.

Görz, J. (1998). Anforderungen an Einsatzstoffe und Prozessparameter bei Nutzung der Flugstromvergasung für die Vergasung von Abfallstoffen. In: M. Born and R. Berghoff (eds), *Vergasungsverfahren für die Entsorgung von Abfällen*. Düsseödorf: Springer-VDI.

Große, L., Henning, F., Kirschbaum, E., Reitz, O. and Schumacher, R. (1962). *Arbeitsmappe für Mineralölingenieure*. Düsseldorf: VDI-Verlag. p. L4.

Gumz, W. (1950). *Gas Producers and Blast Furnaces*. New York: John Wiley and Sons.

Hannemann, F., Kanaar, M., Karg, J. and Schiffers, U. (2002). "Buggenum Experience and Improved Concepts for Syngas Application". Paper presented at Gasification Technologies Conference, San Francisco.

Henrich, E., Dinjus, E. and Meier, D. (2002). "Flugstromvergasung von flüssigen Pyrolyseprodukten bei hohem Druck: Ein neues Konzept zur Biomassevergasung". Paper presented at DGMK Conference "Energetische Nutzung von Biomassen", Velen, Germany.

Higman, C.A.A. (1990). "Synthesis gas processes for synfuels production". Paper presented at Eurogas '90, Trondheim.

Hirschfelder H., Buttker, B. and Steiner, G. (1997). "Concept and realisation of the Schwarze Pumpe 'Waste to Energy and Chemicals Centre' ". Paper presented at IChemE Conference "Gasification Technology in Practice", Milan.

Holt, N. and van der Burgt, M. (1997). "Biomass conversion, prospects and context". Paper presented at Gasification Technologies Conference, San Francisco.

Kanaar, M. and Wolters, C. (2002). "Nuon Power Buggenum IGCC". Paper presented at Gasification Technologies Conference, San Francisco.

Klentsch, S. (2001). "Verhalten von Schwermetallen bei der thermischen Umwandlung von Sägespänen im Flugstrom". PhD dissertation, Engler-Bunte-Institut der Universität Karlsruhe(TH).

Kural, O. (1994). *Coal*. Istanbul: Istanbul Technical University.

Leuna-Werke GmbH (1995). Verfahren zur Herstellung von Synthesegas aus Erdölrückständen und Altkunststoff oder Altkunststoffgemischen. German Patent DE 43 29 436 C1.

Liebner, W. (1998). "MPG–Lurgi/SVZ multi-purpose gasification: a new and proven technology". Paper presented at 10th Refinery Technology Meet, Mumbai.

Löffler, J.C. (1998). "Zirkulierende Wirbelschicht zur Erzeugung von Schwachgas". In: M. Born and R. Berghoff (eds), *Vergasungsverfahren für die Entsorgung von Abfällen*. Düsseldorf: Springer-VDI.

Mahagaokar, U. and Hauser, N. (1994). "Gasification of petroleum coke in the Shell coal gasification process". Paper presented at IMP Gasification Colloquium, Mexico City.

Marklund, M. (2001). Black liquor recovery: how does it work? (Available at www.etcpitea.se/blg/document/PBLG_or_RB.pdf, retrieved December 2001).

Marruffo, F., Sarmiento, W. and Alcala, A. (2001). "Gasification of Orimulsion – synergism of the two technologies". Paper presented at Gasification Technologies Conference, San Francisco.

Meier, D. (2002). "Flash-Pyrolyse zur Verflüssigung von Biomasse – Stand der Technik". Paper presented at the DGMK Conference "Energetische Nutzung von Biomassen", Velen, Germany.

Parkinson, G. (2002). Combing oil from tar sands. *Chemical Engineering*, 109(5): 27–31.

Patterson, J.H., Hurst, H.J. and Quintanar, A. (2002). "Slag compositional limits for coal use in slagging gasifiers". Paper presented at the 19th International Pittsburgh Coal Conference, Pittsburgh.

Perry, R.H. and Chilton, C.H. (1973). *Chemical Engineer's Handbook*. (5th ed.). Tokyo: McGraw-Hill–Kogakusha.

Posthuma, S.A., Vlaswinkel, P.L. and Zuideveld, P.L. (1997). "Shell gasifiers in operation". Paper presented at IChemE Conference "Gasification Technology in Practice", Milan.

Quaak, P., Knoef, H. and Stassen, H. (1999). *Energy from Biomass: A Review of Combustion and Gasification Technologies*. Washington, DC: World Bank.

Ramprasad, R., Vakil, T., Falsetti, J. and Islam, M. (1999). "Competitiveness of gasification at the Bulwer Island, Australia Refinery". Paper presented at Gasification Technologies Conference, San Francisco.

Rettger, P., Arnold, J., Brandenburg, B. and Flech, C. (2006). "The Long Lake Integrated Upgrading Project: status report and discussion of soot processing". Paper presented at Gasification Technologies Conference, Washington.

Schellberg, W. and Garcia Peña, F. (2002). "Commercial operation of the Puertollano IGCC plant". Paper presented at IChemE Conference "Gasification: The Clean Choice for Carbon Management", Noordwijk.

Schingnitz, M., Gaudig, U., McVey, I. and Wood, K. (2000). Gasifier to convert nitrogen waste organics at Seal Sands, UK". Paper presented at IChemE Conference "Gasification 4 the Future", Noordwijk.

Schwager, J. and Whiting, K.J. (2002). "European waste gasification: technical and public policy trends and developments". Paper presented at Gasification Technologies Conference, San Francisco, October.

Sendin, U. (1994). "Proyecto de Gasificación Integrada en Ciclo Combinado de Puertollano". Paper presented at IMP Gasification Colloquium, Mexico City, February.

SFA, Pacific. (2001). *SFA Pacific Gasification Database*. Mountain View: SFA Pacific Inc.

Simbeck, D. and Johnson, H. (2001). "World gasification survey: industry trends and developments". Paper presented at Gasification Technologies Conference, San Francisco.

Singh, B., Miadonye, A. and Puttagunta, V.R. (1993). Heavy oil viscosity range from one test. *Hydrocarbon Processing*, 75(8): 157–162.

Smil, V. (2001). *Enriching the Earth*. Cambridge, MA: MIT Press.

Smoot, L.D. and Smith, P.J. (1985). *Coal Combustion and Gasification*. New York: Plenum.

Soyez, W. (1988). "Slag-related risks in partial oxidation plants". Paper presented at AIChE Ammonia Safety Meeting, Denver.

Spare, P.H. (1997). Biomass: what about health and safety? *Energy World*, June 1997.

Speight, J.G. (1981). *The Desulfurization of Heavy Oils and Residua*. New York: Marcel Dekker.

Speight, J.G. (1983). *The Chemistry and Technology of Coal*. New York: Marcel Dekker.

Speight, J.G. (1990). *Fuel Science and Technology Handbook*. New York: Marcel Dekker.

Speight, J.G. (1998). *The Chemistry and Technology of Petroleum*. (3rd ed.). New York: Marcel Dekker.

Stultz, S.C. and Kitto, J.B. (1992). *Steam, Its Generation and Use*. (40th ed.). Barberton: Babcock and Wilcox.

Supp, E. (1990). *How to Produce Methanol from Coal*. Berlin: Springer.

van der Burgt, M.J. (1997). The role of biomass as an energy carrier for the future. *Energy World*, 246: 16–17.

van der Burgt, M.J. (2005). Entrained flow gasification. In: Knoef, H. (ed.), *Handbook of Biomass Gasification*. Enschede, The Netherlands: Biomass Technology Group, p. 251.

Wiegner, P., Martens, F., Uhlenberg, J. and Wolff, J. (2002). "Increased flexibility of Shell gasification plant". Paper presented at IChemE Conference "Gasification: The Clean Choice for Carbon Management," Noordwijk, April.

Zhao, S., Kotlyar, L.S. Sparks, B.D., Woods, J.R., Gao, J. and Chung, K.H. (2001). Solids contents, properties and molecular structures of asphaltenes from different oilsands. *Fuel*, 80: 1907–1914.

Chapter 5

Gasification Processes

In the practical realization of gasification processes a broad range of reactor types has been and continues to be used. For most purposes, these reactor types can be grouped into one of three categories: moving-bed gasifiers, fluid-bed gasifiers, and entrained-flow gasifiers. The gasifiers in each of these three categories share certain characteristics that differentiate them from gasifiers in other categories. Some of these characteristics are summarized in Table 5.1.

Moving-bed gasifiers (sometimes called fixed-bed gasifiers) are characterized by a bed in which the coal moves slowly downward under gravity as it is gasified by a blast that is generally, but not always, in a counter-current blast to the coal. In such a counter-current arrangement, the hot synthesis gas from the gasification zone is used to preheat and pyrolyse the downward flowing coal. With this process the oxygen consumption is very low, but pyrolysis products are present in the product synthesis gas. The outlet temperature of the synthesis gas is generally low, even if high, slagging temperatures are reached in the heart of the bed. Moving-bed processes operate on lump coal. An excessive amount of fines, particularly if the coal has strong caking properties, can block the passage of the up-flowing syngas.

Fluid-bed gasifiers offer extremely good mixing between feed and oxidant, which promotes both heat and mass transfer. This ensures an even distribution of material in the bed, and hence a certain amount of only partially reacted fuel is inevitably removed with the ash. This places a limitation on the carbon conversion of fluid-bed processes. The operation of fluid-bed gasifiers is generally restricted to temperatures below the softening point of the ash, since ash slagging will disturb the fluidization of the bed. Some attempts have been made to operate into the ash-softening zone to promote a limited and controlled agglomeration of ash with the aim of increasing carbon conversion. Sizing of the particles in the feed is critical; material that is too fine will tend to become entrained in the syngas and leave the bed overhead. This is usually partially captured in a cyclone and returned to the bed. The lower temperature operation of fluid-bed processes means that they are more suited for gasifying reactive feedstocks, such as low-rank coals and biomass.

Table 5.1
Characteristics of different categories of gasification process

Category	Moving-bed		Fluid-bed		Entrained-flow
Ash conditions	Dry bottom	Slagging	Dry ash	Agglomerating	Slagging
Typical processes	Lurgi	BGL	Winkler, HTW, KBR, CFB, HRL	KRW, U-Gas	KT, Shell, GEE, E-Gas, Siemens, MHI, PWR
Feed characteristics					
Size	6–50 mm	6–50 mm	6–10 mm	6–10 mm	<100 μm
Acceptability of fines	Limited	Injection through tuyères	Good	Better	Unlimited
Acceptability of caking coal	Yes (with stirrer)	Yes (with stirrer)	Possibly	Yes	Yes
Preferred coal rank	Any	High	Low	Any	Any
Operating characteristics					
Outlet gas temperature	Low (425–650°C)	Low (425–650°C)	Moderate (900–1050°C)	Moderate (900–1050°C)	High (1250–1600°C)
Oxidant demand	Low	Low	Moderate	Moderate	High
Steam demand	High	Low	Moderate	Moderate	Low
Other characteristics	Hydrocarbons in gas	Hydrocarbons in gas	Lower carbon conversion	Lower carbon conversion	Pure gas, high carbon conversion

Source: Adapted from Simbeck *et al.*, 1993.

Entrained-flow gasifiers operate with feed and blast in co-current flow. The residence time in these processes is short (a few seconds). The feed is ground to a size of 100 μm or less to promote mass transfer and allow transport in the gas. Given the short residence time, high temperatures are required to ensure a good conversion, and therefore all entrained-flow gasifiers operate in the slagging range. The high-temperature operation creates a high oxygen demand for this type of process. Entrained-flow gasifiers do not have any specific technical limitations on the type of coal used, although coals with a high moisture or ash content will drive the oxygen consumption to levels where alternative processes may have an economic advantage.

There are one or two processes that do not fit into any of these three main categories. These include *in situ* gasification of coal in the underground seam, as well as molten bath processes. These are discussed in section 5.8.

One important point to note throughout all the above is the significance of the slagging behavior of the ash. At temperatures above the ash-softening point, the ash becomes sticky and will agglomerate, causing blockage of beds or fouling of heat exchange equipment. Once above the slagging temperature, at which point the ash has a fully liquid behavior with a low viscosity, it is possible again to remove it from the system reliably. Thus for all processes there is a feedstock-specific "no-go" temperature range between the softening and slagging temperatures of the ash.

5.1 MOVING-BED PROCESSES

Historically, moving-bed processes are the oldest processes, and two processes in particular, the producer gas process and the water gas process, have played an important role in the production of synthesis gas from coal and coke. The preferred feedstocks are in general coke or anthracite, as otherwise the gas needs extensive cleaning to remove tars from the gas. Both processes operate at atmospheric pressure.

Producer gas

In the producer gas process, humidified air is blown upward through a deep bed of coal or coke. The coal is fed from the top and moves slowly downwards as it is consumed. Ash is drawn off at the bottom of the reactor from a rotating grate. The air reacts with the coal, thereby producing a gas with a lower heating value of about 6500 kJ/Nm^3. The presence of about 50% nitrogen in the product gas is the main cause for this low value. The advantage of this process is that it is continuous. The main drawback is that because of its low heating value, producer gas cannot be transported economically over long distances. When using low-rank feedstocks such as wood, the heating value of the gas can be as low as 3500 kJ/Nm^3. Gas producers continue to be built in small numbers today where gas is required locally for firing

industrial furnaces, particularly in locations where coal is the only available energy form – as in parts of China (Wellman, undated).

Water gas

The water gas process is a discontinuous process in which steam reacts with red-hot coke to form hydrogen and carbon monoxide. First, the coal or coke bed is heated by blowing air upward through the bed to temperatures of about 1300°C. Then the air flow is stopped and steam is passed through the coal or coke bed, first upward and then downward, thereby producing synthesis gas. The reason for the two different directions of steam flow is to make optimum use of the heat in the bed, which is required to drive the endothermic water gas reaction. When the temperature has dropped to about 900°C, the steam "run" is stopped and the cycle is repeated. After purification, the syngas can be used for the synthesis of ammonia or methanol. Before the advent of large-scale air separation plants, the water gas process was the only means for making high-grade synthesis gas for chemical purposes. In order to obtain a continuous gas flow, at least three water gas reactors are required.

5.1.1 The Sasol-Lurgi dry bottom process

The patent for the Lurgi dry bottom process, or "coal pressure gasification", as it was originally known, "Vergasung von Braunkohle unter Druck mit Sauerstoff-Wasserdampf-Gemischen" ("Gasification of brown coal under pressure with oxygen-steam mixtures"), was granted in 1927. In 1931 Lurgi started to develop a pressurized version of existing atmospheric producer gas technology, using oxygen as blast, initially for gasification of lignite (Lurgi, 1970, 1997). The development was made in close cooperation with the Technical University in Berlin under the direction of Professor Rudolf Drawe, one of the fathers of modern gasification. The first commercial application was built in 1936 (Rudolf, 1984). In 1944, two large-scale plants were in operation in Böhlen (Saxony) and Brüx (now Most, Czech Republic) producing town gas. The position of the Lurgi dry bottom gasifier as the only pressure gasification system for many years, together with continued development, for example, in scale-up, automation and operational optimization, have all contributed to the commercial success of this technology. Further technical development and marketing has been placed in a joint venture between Lurgi and the largest operator of the technology, Sasol, and today the technology is referred to as the Sasol-Lurgi dry bottom gasifier.

Standardized reactor sizes are shown in Table 5.2.

These figures for throughput and gas production are nominal figures, which are substantially influenced by the quality of coal processed. For instance, Sasol reports achieving 30% excess throughput compared with the original rated design (Erasmus and van Nierop, 2002).

Table 5.2
Sizes and capacities of Sasol-Lurgi dry bottom gasifiers

Type	Nominal diameter (m)	Coal throughput (t/h)	Gas production (dry) (1000 Nm^3/day)
MK III	3	20	1000
MK IV	4	40	1750
MK V	5	60	2750

Source: Rudolf, 1984.

Most commercial gasifiers operate at pressures of 25–30 bar. A demonstration plant has been operated at pressures of 100 bar (see section 5.1.3).

Process description

The heart of the Lurgi process is in the reactor, in which the blast and syngas flow upwards in counter-current to the coal feedstock (Figure 5.1).

Coal is loaded from an overhead bunker into a lock-hopper that is isolated from the reactor during loading, then closed, pressurized with syngas, and opened to the reactor. The reactor is thus fed on a cyclic basis.

The reactor vessel itself is a double-walled pressure vessel in which the annular space between the two walls is filled with boiling water. This provides intensive cooling of the wall of the reaction space while simultaneously generating steam from the heat lost through the reactor wall. The steam is generated at a pressure similar to the gasification pressure, thus allowing a thin inner wall, which enhances the cooling effect.

The coal from the lock-hopper is distributed over the area of the reactor by a mechanical distribution device, and then moves slowly down through the bed, undergoing the processes of drying, devolatilization, gasification and combustion. The ash from the combustion of ungasified char is removed from the reactor chamber via a rotating grate, and is discharged into an ash lock-hopper. In the grate zone, the ash is precooled by the incoming blast (oxygen and steam) to about 300–400°C.

The blast enters the reactor at the bottom and is distributed across the bed by the grate. Flowing upward, it is preheated by the ash before reaching the combustion zone in which oxygen reacts with the char to form CO_2. At this point in the reactor the temperatures reach their highest level (Figure 5.2). The CO_2 and steam then react with the coal in the gasification zone to form carbon monoxide, hydrogen and methane. The gas composition at the outlet of the gasification zone is governed by the three heterogeneous gasification reactions: water gas, Boudouard, and methanation (for details, see section 2.1).

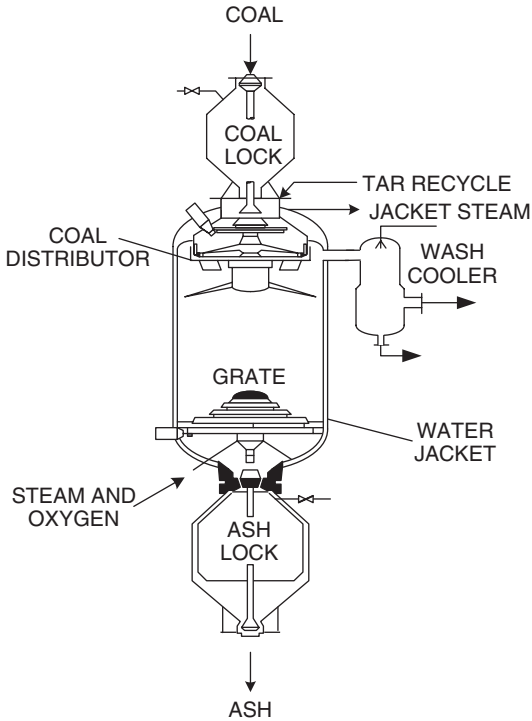

Figure 5.1 Sasol-Lurgi dry bottom gasifier (source: Lurgi, 1970).

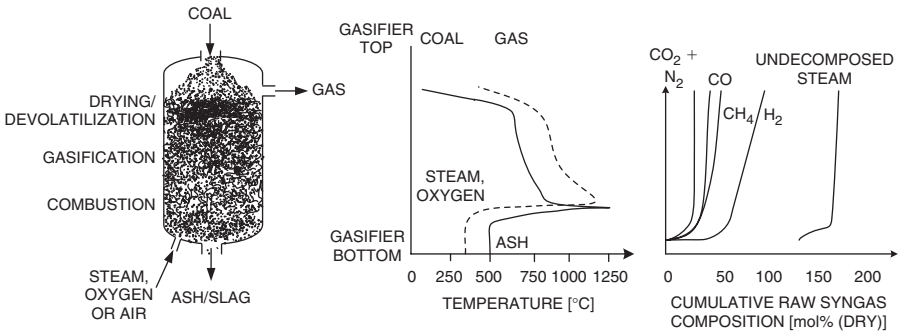

Figure 5.2 Temperature and gas composition profiles in a Sasol-Lurgi dry bottom gasifier (adapted from Rudolf, 1984; Supp, 1990).

While describing the process in the form of these four zones, it should be stressed that the transition from one zone to the next is gradual. This is especially noticeable in the transition from the combustion zone to the gasification zone. The endothermic gasification reactions already begin before all the oxygen has been consumed

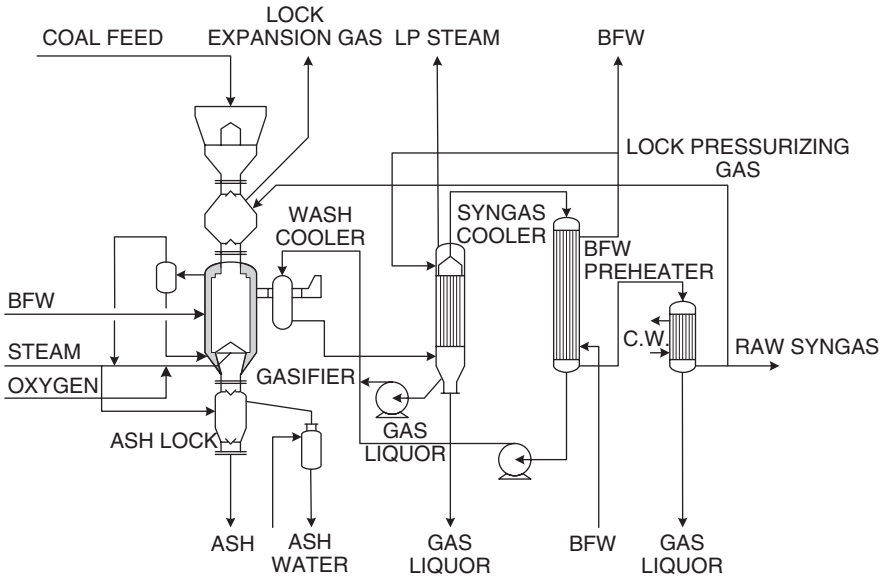

Figure 5.3 Process flowsheet of Sasol-Lurgi dry bottom gasification (source: Supp, 1990).

in combustion. Thus the actual peak temperature is lower than that calculated by assuming a pure zonal model (see Figure 5.2) (Gumz, 1950; Rudolf, 1984).

This gas leaving the gasification zone then enters the upper zones of the reactor, where the heat of the gas is used to devolatilize, preheat and dry the incoming coal. In this process the gas is cooled from about 800°C at the outlet of the gasification zone to about 550°C at the reactor outlet (Figure 5.3).

A result of the counter-current flow is the relatively high methane content of the outlet gas. On the other hand, part of the products of devolatilization are contained unreacted in the synthesis gas, particularly tars, phenols and ammonia, but also a wide spread of other hydrocarbon species. Bulk removal of this material takes place immediately at the outlet of the reactor by means of a quench cooler in which most of the high-boiling hydrocarbons and dust carried over from the reactor are condensed and/or washed out with gas liquor from the downstream condensation stage.

Gas liquor treatment

The gas liquor from the quench cooler typically contains the contaminants outlined in Table 5.3 (Supp, 1990).

Table 5.3
Gas liquor composition

Suspended matter	1000	mg/l
Sulfur	600	mg/l
Chloride	50	mg/l
NH_3' and NH_4' ions	10 000	mg/l
Cyanide	50	mg/l
Phenols	1000–5000	mg/l
COD	10 000	mg O_2/l

Source: Supp, 1990.

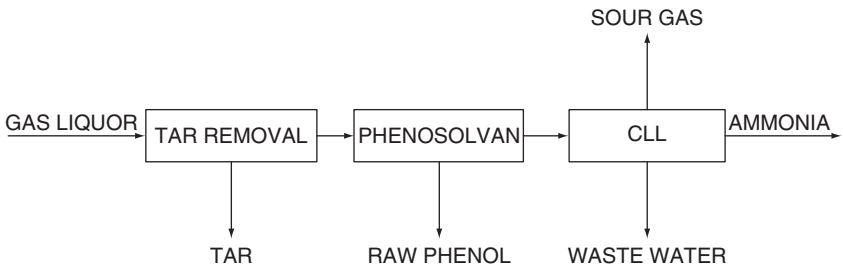

Figure 5.4 Gas liquor treatment for Sasol-Lurgi dry bottom gasification.

There are a number of alternate strategies for handling this material. Lurgi has developed two specific processes for treating it, in particular for allowing the recovery of pure ammonia.

The process sequence (see Figure 5.4) includes mechanical tar separation, followed by the Phenosolvan extraction process in which a raw phenol fraction is recovered. Sour gases and ammonia are then selectively and separately stripped from the dephenolated condensate in the CLL (Chemie Linz-Lurgi) unit. The sour gas stream is free of ammonia and thus suitable for processing in a standard Claus sulfur recovery unit (see section 8.4). The stripped condensate contains less than 50 ppm NH_3 and less than 1 ppm H_2S, and can be discharged to a biotreater. The ammonia product from the CLL unit contains less than 4% water, less than 0.1 wt% CO_2 and less than 1 ppm H_2S. Further details on these processes can be found in Supp (1990) and Stönner (1989).

Equipment issues

Both the Lurgi gasifier and the BGL gasifier described in section 5.1.2 have moving parts that are absent in other gasifiers. For caking coals, and sometimes for distribution

reasons, a stirrer is installed in the top of the reactor. The distribution function is required to ensure an even depth of the coal bed over the whole cross-section of the reactor. With caking coals, the stirrer avoids pasting-up of the coal bed due to agglomeration of the coal particles after their temperature becomes higher than the softening point. The dry bottom gasifier also has a rotating grate at the bottom for the ash outlet.

Moving-bed gasifiers require a relatively high amount of maintenance. However, in virtually all cases many gasifiers operate in parallel, and by proper scheduling the total unit will have a high availability (US Department of Energy, April 2006).

Process performance

An important feature of the Lurgi dry bottom gasifier is its low oxygen consumption and high steam demand. The exact data depend on the feedstock. Table 5.4 provides data on the basis of three different coals that cover a broad range of coalification or rank.

Moving-bed gasifiers need graded coal in the range 6–50 mm. Total mine output will always contain a large percentage of fines, with the tendency that more

Table 5.4
Typical performance data of the Sasol-Lurgi dry bottom gasifier

Type of coal		Lignite	Bituminous	Anthracite
Components (maf)				
C	wt%	69.50	77.30	92.10
H	wt%	4.87	5.90	2.60
S	wt%	0.43	4.30	3.90
N	wt%	0.75	1.40	0.30
O	wt%	24.45	11.10	1.10
Raw gas composition (dry)				
$CO_2 + H_2S$	mol%	30.4	32.4	30.8
CO	mol%	19.7	15.2	22.1
H_2	mol%	37.2	42.3	40.7
CH_4	mol%	11.8	8.6	5.6
C_nH_m	mol%	0.4	0.8	0.4
N_2	mol%	0.5	0.7	0.4
Feed components per 1000 Nm^3 $CO + H_2$				
Coal maf	kg	950	750	680
Steam	kg	1180	1930	1340
Oxygen	Nm^3	170	280	300

Source: Supp, 1990.

modern mines produce more fines, so that disposal of the fines is an issue that needs to be addressed at the project conception stage. Power production in a neighboring facility is one solution that has been adopted successfully (US Department of Energy, April 2006). Although it is in principle possible to make briquettes with these fines by binding them with the heavy tar that is co-produced in the gasifier, in practice there will be some part of the fines that cannot be processed. Reactor throughput and performance can be improved by narrowing the particle size distribution.

Heavily caking coals cannot be processed in moving-bed gasifiers. Mildly caking coals require the assistance of the stirrer in order to avoid pasting-up of the bed. Tars and other oxygenated compounds are also produced as by-products. These products form about 25% of the total hydrocarbon feed input in terms of energy. Correcting the oxygen consumption and the CGE (cold gas efficiency) for this fact increases the former and reduces the latter by about one-third. When you add this to the sensible heat in the gases that cannot be used very effectively due to the presence of the tars, the overall efficiencies of the moving-bed processes are not much higher than of fluid-bed or entrained-flow gasifiers.

Applications

The most notable commercial installation forms part of the Sasol synthetic fuels operation at two sites in South Africa, where in all 13 MK III (recently dismantled since natural gas has become available), 83 MK IV and 1 MK V reactors produce a total of 55 million Nm^3/day syngas – the largest gasification complex in the world. The synthesis gas generated produces 170 000 bbl/day of Fischer-Tropsch liquid fuels, as well as forming the basis for a substantial chemical industry (Erasmus and van Nierop, 2002). The reason that Sasol-Lurgi dry bottom gasifiers are used in the Sasol complex in South Africa is that at the time the complex was built it was the only pressurized gasifier available, and was very suitable for the high ash-melting point coals to be processed.

The Lurgi-type moving-bed dry bottom gasifier is in widespread use around the world in, as well as South Africa, the United States, Germany, the Czech Republic and China. The plants in Germany and the Czech Republic use some of the gas to fuel gas turbine combined cycle power plants. In the United States, Lurgi dry bottom gasifiers are used for the production of Substitute Natural Gas (SNG) (US Department of Energy, April 2006). In China, the Lurgi process is used for the production of town gas, ammonia and hydrogen. In the SNG, IGCC and town gas applications, the high methane content (10–15%) of the product gas is an advantage, since methane is the desired product for SNG, and for IGCC and in town gas applications methane increases the heating value of the gas. A recent (2006) contract for production of reduction gas in India is an indication of the continued application of the process for high ash coals.

5.1.2 British Gas/Lurgi (BGL) slagging gasifier

The BGL slagging gasifier is an extension of the original Lurgi pressure gasifier developed by British Gas and Lurgi with the ash discharge designed for slagging conditions (Brooks *et al.*, 1984). Initial work took place in the 1950s and 1960s, but ceased with the discoveries of natural gas in the North Sea. Work resumed in 1974 after the "oil crisis". An existing Lurgi gasifier in Westfield, Scotland, was modified for slagging operation and operated for several years, proving itself with a wide range of coals and other solid feedstocks, such as petroleum coke. The motivation for the development of a slagging version of the existing Lurgi gasifier included a desire to:

- Increase CO and H_2 yields (at the expense of CO_2 and CH_4)
- Increase specific reactor throughput
- Have a reactor suitable for coals with a low ash-melting point
- Have a reactor suitable for accepting fines
- Reduce the steam consumption and consequent gas condensate production.

The decline in interest for coal gasification generally in the 1980s prevented commercialization of the technology. In the mid-1990s the first commercial project was realized at Schwarze Pumpe in Germany, where a mixture of lignite and municipal solid waste (MSW) is gasified within a large complex and the syngas is used for methanol and power production (Hirschfelder *et al.*, 1997). A number of other projects also for MSW gasification are currently under consideration.

The technology is now owned and jointly marketed by Advantica (successors to British Gas) and Allied Syngas and Envirotherm (successors to Lurgi for the BGL technology).

Process description

The upper portion of the BGL gasifier is identical to that of the Sasol-Lurgi dry bottom gasifier, although for some applications it may be refractory lined and the distributor and stirrer omitted. The bottom is completely redesigned, as can be seen in Figure 5.5.

In contrast to the Sasol-Lurgi dry bottom gasifier, there is no grate. The grate of the Sasol-Lurgi dry bottom gasifier serves two purposes: distribution of the oxygen–steam mixture, and ash removal. In the BGL gasifier the former function is performed by a system of tuyères (water-cooled tubes) located just above the level of the molten slag bath. The tuyères are also capable of introducing other fuels into the reactor. This includes the pyrolysis products from the raw gas, as well as a degree of coal fines that cannot be introduced at the top of the reactor for fear of blockage.

The lower portion of the reactor incorporates a molten slag bath. The molten slag is drained through a slag tap into the slag quench chamber, where it is quenched with water and solidified. The solid slag is discharged though a slag lock.

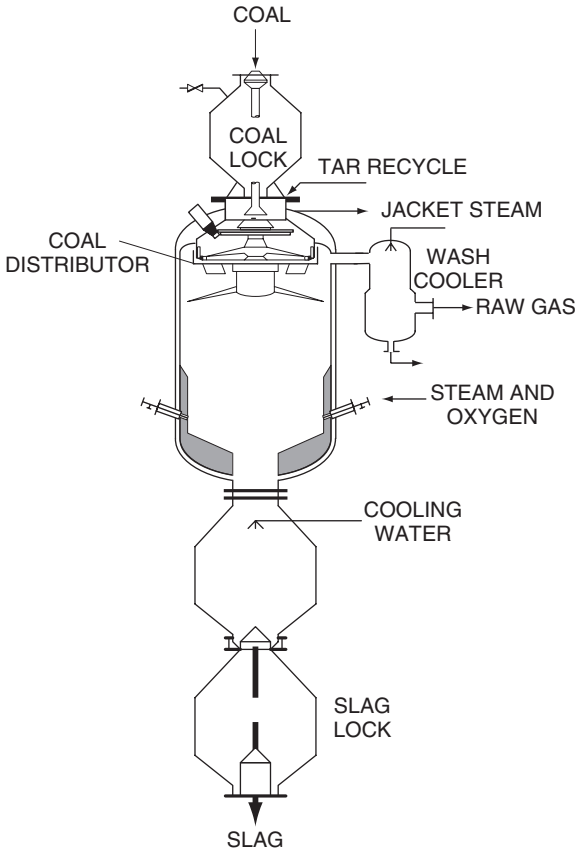

Figure 5.5 BGL gasifier (reproduced with permission of Lurgi AG).

Process performance

A comparison between the performance of the Sasol-Lurgi dry bottom gasifier and the BGL gasifiers is given in Table 5.5.

The much lower steam and somewhat lower oxygen consumption of the slagging gasifier results in a much higher syngas production per unit of coal intake and a much lower yield of pyrolysis products compared with the dry bottom unit. Further, the CO_2 content of the gas is lower and the methane content in the gas is halved.

With regard to the development intent of having a reactor that could accept fines, this can be achieved by injecting the fines – either dry or as slurry – into the bottom of the gasifier via the tuyères. For the material fed to the top of the reactor, similar limitations exist as with the Sasol-Lurgi dry bottom gasifier.

Table 5.5
Comparative performance of Lurgi dry bottom, BGL and Ruhr 100 gasifiers

Raw gas composition (dry)		**Sasol-Lurgi dry bottom gasifier**	**BGL slagging gasifier**	**Ruhr 100 90 bar carb. gas**	**Ruhr 100 90 bar clear gas**
CO_2	mol%	30.89	3.46	29.52	35.47
CO	mol%	15.18	54.96	18.15	17.20
H_2	mol%	42.15	31.54	35.11	39.13
CH_4	mol%	8.64	4.54	15.78	7.93
C_nH_m	mol%	0.79	0.48	1.02	0.04
N_2	mol%	0.68	3.35	0.35	0.19
H_2S + COS	mol%	1.31	1.31		
NH_3	mol%	0.36	0.36		
Feed components per 1000 Nm^3 $CO + H_2$					
Coal maf	kg	750	520		
Steam	kg	1930	200		
Oxygen	Nm^3	280	230		
kg pyrolysis products/1000 kg coal		81	19		

Source: Lohmann and Langhoff, 1982; Supp, 1990.

Waste gasification

As mentioned above, the BGL gasifier has found a commercial application in waste gasification at the SVZ Schwarze Pumpe plant near Dresden in Germany. A 3.6 m diameter BGL gasifier is fed with a mixed fuel of various wastes and coal. During test operation the unit has gasified a mixture of 25% hard coal, 45% refuse-derived fuel (RDF) pellets, 10% plastic waste, 10% wood and 10% tar sludge pellets.

During the performance test, the following production and consumption figures were achieved (Greil *et al.* 2002):

Mixed fuel (ar)	**30**	**t/h**
Specific oxygen consumption	<0.2	Nm^3/Nm^3 dry gas
Gasification agent ratio steam/oxygen	<1.0	kg/Nm^3 dry gas
Raw gas (dry)	31 500	Nm^3/h

Gasification pressure is 25 bar. The ash content of the feed is discharged as a glassy frit. Analytical tests have demonstrated the non-leachability of the slag, and that disposal requirements according to TA Siedlungsabfall, class 1 (German waste regulations) have been met.

5.1.3 Ruhr 100

Another development of the Lurgi dry bottom gasifier was the high-pressure Ruhr 100 gasifier which was designed for operation at 100 bar. Apart from its high-pressure capability, the reactor contained a number of other new features. It had two coal lock-hoppers, which reduces the lock gas losses by half by operating alternately. This was implemented to counter the rise in such losses that accompanies the rise in operating pressure. It had the additional effect of simplifying the drive arrangement for the stirrer, which could now be mounted centrally. Another new feature was the addition of a second gas tapping at an intermediate level between the gasification and devolatilization zones. Not all the gas volume is required to achieve devolatilization of the feed, so the excess was drawn off from the bed as "clear gas". The measured compositions of the carbonization gas containing the volatiles and the clear gas are given in Table 5.5.

A 240 t/d pilot plant was started up in 1979. By September 1981, many of the most important goals of the tests had already been confirmed. Increasing the pressure from 25 bar to 95 bar approximately doubled the throughput of the reactor. The pressure increase also increased the methane production from about 9 mol% in the product gas to 16 mol% (Lohmann and Langhoff, 1982).

5.2 FLUID-BED PROCESSES

The history and development of coal gasification and fluid-bed technology have been intimately linked since development of the Winkler process in the early 1920s. Winkler's process operated in a fluidization regime, where a clear distinction exists between the dense phase or bed and the freeboard where the solid particles disengage from the gas. This regime is the classic or stationary fluid bed. With increasing gas velocity a point is reached where all the solid particles are carried with the gas and full pneumatic transport is achieved. At intermediate gas velocities the differential velocity between gas and solids reaches a maximum, and this regime of high, so-called "slip velocity", is known as the circulating fluid bed. Over the years gasification processes have been developed using all three regimes, each process exploiting the particular characteristics of a regime to the application targeted by the process development. These differences are portrayed in Figure 5.6.

In fluid-bed gasification processes the blast has two functions: that of blast as a reactant and that of the fluidizing medium for the bed. Such solutions, where one variable has to accomplish more than one function, will tend to complicate or place

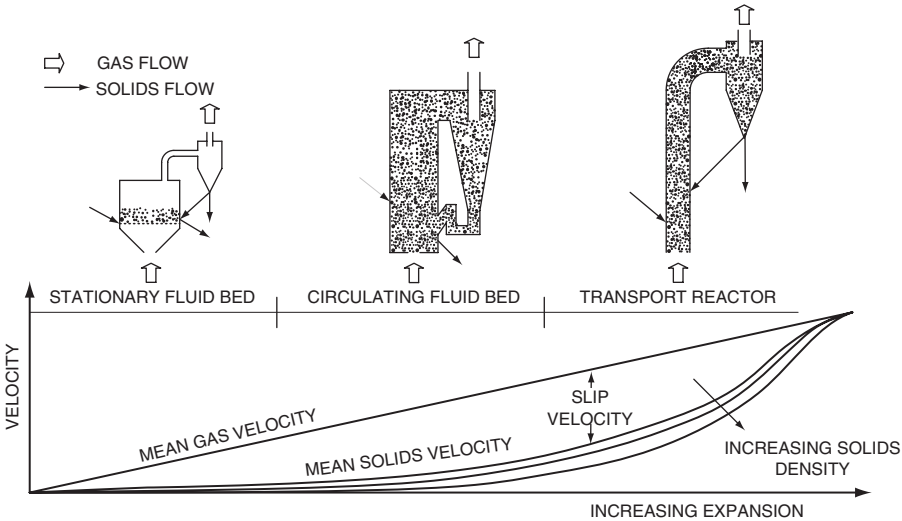

Figure 5.6 Fluid-bed regimes (Greil and Hirschfelder, 1998).

limitations on the operation of the gasifier, as in, for example, turndown ratio. These problems are especially severe during start-up and shutdown. In most modern gasification processes, oxygen/steam mixtures are used as blast. However, when the gas is to be used for power generation, gasification with air may be applied – and in the case of biomass gasification, it often is.

Some simplified reactor sketches for bubbling fluid beds, circulating fluid beds and transport reactors are given in Figures 5.9, 5.11 and 5.12. In Figure 5.7, the temperature profiles for both the coal and gas are also given. Temperature profiles for transport type gasifiers are very complex.

Commercial processes described here in section 5.2 are mainly focused on coal gasification. Additional fluid-bed process focused on biomass or waste gasification can be found in sections 5.5 and 5.6.

5.2.1 Common issues

Operating temperature

Any fluid bed depends on having the solid particles of a size which can be lifted by the upward flowing gas. A large portion (over 95%) of the solids content of the bed of a gasifier is ash or other inert material, which remains in the bed while the carbon leaves the reactor as syngas. If the ash content of the fuel, be it coal, biomass or other, should start to soften sufficiently that the individual particles begin to agglomerate, then these newly formed larger particles will fall to the bottom of the bed and their removal then poses a considerable problem. For this reason, fluid-bed

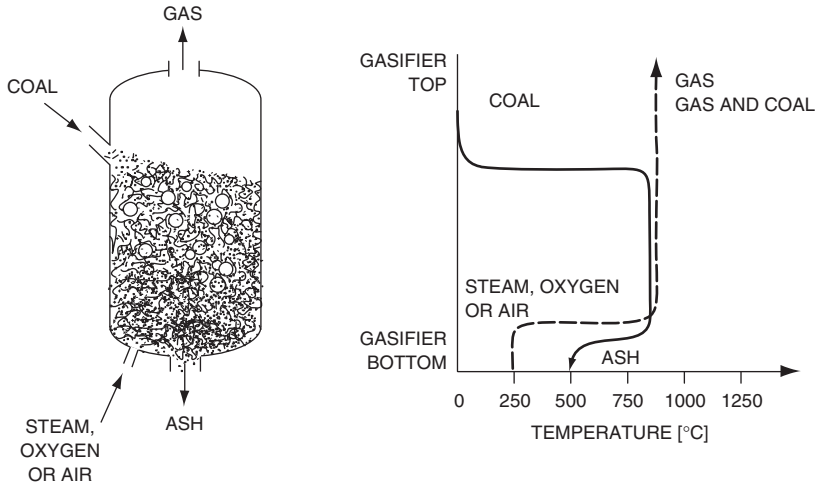

Figure 5.7 Bubbling fluid-bed gasifier (source: Simbeck *et al.*,1993).

gasifiers all operate at temperatures below the softening point of the ash, which is typically in the range 950–1100°C for coal and 800–950°C for biomass.

On the other hand, the lower the temperature of the gasifier operation, the more tar will be produced in the product synthesis gas. This is partly due to the fact that when the coal particles are heated slowly, more volatiles are produced, as discussed in Chapter 3. It is also due to the fact that at lower temperatures there is less thermal cracking of the tars produced.

The best known fluid-bed gasifiers that have no tar problem are regenerators of catalytic cracking units that often operate under reducing – that is, gasification – conditions that can be found in many refineries. In these units the carbon residue that remains after gases and volatiles have been collected is gasified in a bubbling fluid-bed. These operate at a few bar overpressure and temperatures of below 800°C. Maximum throughputs are 500 t/d carbon.

Feed quality

Historically, fluid-bed gasifiers have tended to be operated on low-rank coals such as lignite, peat or biomass, though not exclusively. This is logical, since low-rank coals have a higher reactivity, which compensates to some degree for the lower temperature. To the extent that the ash properties allow it, operation at a higher temperature improves the ability to process high-rank but less reactive bituminous coals.

Fluid-bed gasifiers need ground coal, and therefore have few limitations when it comes to coal size. Particles with a size above 10 mm should be avoided, as should coals with a too high percentage of very small particles. However, because the particles may differ in both size and shape, coal is not an easy material to fluidize.

Bubbling beds especially have to be monitored constantly, on the one hand for defluidization due to deposition of large coal particles in the bed, and on the other hand for lifting too many fine particles out of the bed. The latter problem is aggravated as coal particles reduce in size through gasification and are entrained in the hot raw gas as it leaves the reactor. Most of these char and ash particles are recovered in a cyclone and recycled to the reactor, but with too many fines these will choke the system.

Carbon conversion

The intensive mixing in a fluidized bed has its advantages in promoting excellent mass and heat transfer. In fact, a fluid bed approaches the ideal continuously stirred tank reactor. This does, however, have its disadvantages. There is wide range of residence times of the individual particles, which is distributed evenly over the whole volume of the bed. Thus removal of fully reacted particles, which consist only of ash, will inevitably be associated with removal of unreacted carbon. The best of existing fluid-bed processes only have a carbon conversion of 97%. This is in contrast to moving-bed and entrained-flow processes, where carbon conversions of 99% can be obtained. Only in pressurized biomass gasification fluid-bed processes have efficiencies of 99% been reported (Kersten, 2002).

Many attempts (e.g. Synthane or Hy-Gas) have been, and are being, made to introduce some staging effect by which the last carbon in the ash to be discharged is converted with (part of) the incoming blast, but this remains difficult, as fluid beds lend themselves poorly to staging because of the "no-go" temperature zones mentioned earlier in this chapter.

Ash

The ash of fluid-bed gasifiers is discharged in a highly leachable form. This problem is exacerbated when limestone is added in order to bind the sulfur present in the gas and to avoid the need for wet sulfur removal processes. The limestone is never completely converted into gypsum, and hence the ash will always contain unconverted lime. Similar problems are associated with fluid-bed combustion processes. Adding limestone to the fluid bed is an example of doing two things at once – it looks elegant, but you are never free to optimize both desulfurization and gasification or combustion.

Ash particles are removed from below the bed and/or from the cyclones in the top of the bed. In the former case, they are sometimes used for preheating the blast. Fluid-bed gasifiers may differ in the manner that ash is discharged (dry or agglomerated) and in design aspects that improve the carbon conversion. Some "carbon stripping" of the char containing ash to be discharged with incoming oxygen is possible. Note that with low carbon conversion, disposal of ash with a high carbon content can be a problem.

Equipment issues

Although fluid-bed gasifiers operate under non-slagging conditions and no membrane walls are required, the temperatures can run up to 1100°C, and hence insulating brick walls are preferred. These consist of an outer layer of insulating bricks to protect the outer steel shell of the reactor from high temperatures, and an inner layer of denser bricks that can better withstand the high temperatures and the erosive conditions of the gasifier. Especially in the case of circulating fluid-beds, with their complex asymmetrical forms, attention has to be paid to the proper design of the brickwork in relation to thermal expansion.

Reactor modeling

Whereas bubbling beds may be described fairly accurate as a stirred reactor, the transport-type reactors are more a combination of a stirred reactor and a plug flow reactor.

Most fluid-bed gasifiers use a mixture of oxygen and steam as blast. The oxygen consumption per unit product is higher than that of moving-bed processes and lower than for entrained-flow gasifiers. Some data for typical feedstocks calculated for 1100°C are given in Table 5.6.

5.2.2 The Winkler process

The Winkler atmospheric fluid-bed process was the first modern continuous gasification process using oxygen rather than air as blast (see Figure 5.8). The process was patented in 1922 and the first plant built in 1925. Since then some 70 reactors have been built and brought into commercial service, with a total capacity of about 20 million Nm^3/d (Bögner and Wintrup, 1984). This process is now, however, only of historic interest, since all but one of these plants has now been shut down, almost entirely for economic reasons.

The Winkler process is operable with practically any fuel. Commercial plants have operated on brown coal and coke, as well as on sub-bituminous and bituminous coals. Coal preparation requires milling to a particle size below 10 mm, but does not require drying if the moisture content is below 10%. The feed is conveyed into the gasifier or generator by a screw conveyor. The fluid bed is maintained by the blast, which enters the reactor via a conical grate area at the base. An additional amount of blast is fed in above the bed to assist gasification of small, entrained coal particles. This also raises the temperature above that of the bed itself, thus reducing the tar content of the syngas. The reactor itself is refractory lined. Operation temperature is maintained below the ash melting point – most commercial plants have operated between 950 and 1050°C. At maximum load, the gas velocity in a Winkler generator is about 5 m/s. The flow sheet incorporates a partly radiant waste heat boiler and a cyclone to remove the ash. The ash contains a considerable amount of unreacted carbon – over 20% on feed (Kunii and Levenspiel, 1991) – which can be

Table 5.6
Typical performance for fluid-bed gasifiers for different feedstocks and blasts

Type of coal		Biomass	Lignite	Bituminous	Bituminous
Blast		Air	O_2/steam	O_2/steam	Air
Temperature	°C	900	1000	1000	1000
Pressure	bar	30	30	30	30
Components (maf)					
C	wt %	50.45	66.66	81.65	81.65
H	wt %	5.62	4.87	5.68	5.68
S	wt %	0.10	0.41	1.13	1.13
N	wt %	0.10	1.14	1.71	1.71
O	wt %	43.73	26.92	9.83	9.83
Raw gas composition (dry)					
CO_2	mol%	6.7	6.2	5.3	1.9
CO	mol%	31.0	56.7	52.0	30.7
H_2	mol%	18.9	32.8	37.3	18.7
CH_4	mol%	2.1	2.6	3.5	0.9
Ar	mol%	0.5	0.6	0.6	0.6
N_2	mol%	40.8	0.9	1.0	47.0
H_2S	mol%	0.03	0.2	0.3	0.2
Feed components per 1000 Nm^3 H_2 + CO					
Fuel maf	kg	893	777	517	516
Steam	kg	0	1	213	112
Air or oxygen	Nm^3	1358	339	324	1581

burnt in an auxiliary boiler. Final solids removal is effected with a water wash (not shown in Figure 5.8).

5.2.3 The High-Temperature Winkler (HTW) process

The name "High-Temperature Winkler" for the process developed by Rheinbraun primarily for lignite gasification is to some extent a misnomer. The most important development *vis-à-vis* the original Winkler process is the increase of pressure, which has now been demonstrated at 30 bar.

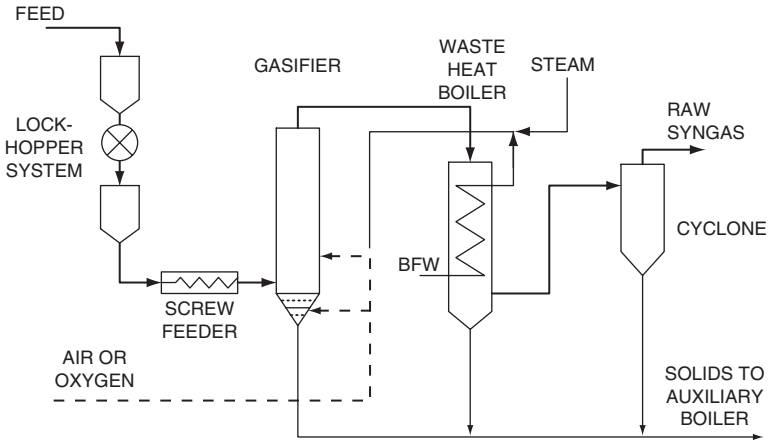

Figure 5.8 Winkler atmospheric fluid-bed gasification.

Rheinbraun, an important lignite producer in Germany, began work on the process in the 1970s. A Rheinbraun subsidiary, Union Kraftstoff, Wesseling, had operated atmospheric Winkler generators between 1956 and 1964, and Rheinbraun was able to build on the experience gained.

An important motivation for the initial development was to ensure the availability of a suitable process to utilize existing lignite reserves, should economic conditions (i.e. the price of oil) justify it. The focus was on methanol syngas and hydrogen generation for the parallel development of a hydrogenating gasifier for SNG production.

Development goals included raising the pressure so as to increase output and reduce compression energy, raising operating temperatures so as to improve gas quality and carbon conversion, and include a solids recycle from the cyclone to the fluid-bed as a further measure to increase carbon conversion (Teggers and Theis, 1980).

The feed system comprises a lock-hopper for pressurizing and a screw feeder for the transport of coal from the high-pressure charge bin into the gasifier (see Figure 5.9).

The HTW process includes heat recovery in a syngas cooler in which the raw synthesis gas is cooled from 900°C to about 300°C. Both fire tube and water tube concepts have been used in the demonstration plants, and selection is based on project specific criteria, such as desired steam pressure (Renzenbrink *et al.*, 1998).

A ceramic candle filter is used downstream of the syngas cooler for particulate removal.

The 600 t/d, 10 bar demonstration unit in Berrenrath, which was operated over 12 years and achieved an availability of 84%, was used to supply gas to a commercial methanol plant. This provided the basis for a plant of similar size, operating at 13.5 bar, gasifying mainly peat in Oulu, Finland. A further 160 t/d pilot plant was built in Wesseling to prove various aspects connected with IGCC applications, such as a higher pressure (25 bar). Typical gas analyses from these plants are shown in Table 5.7.

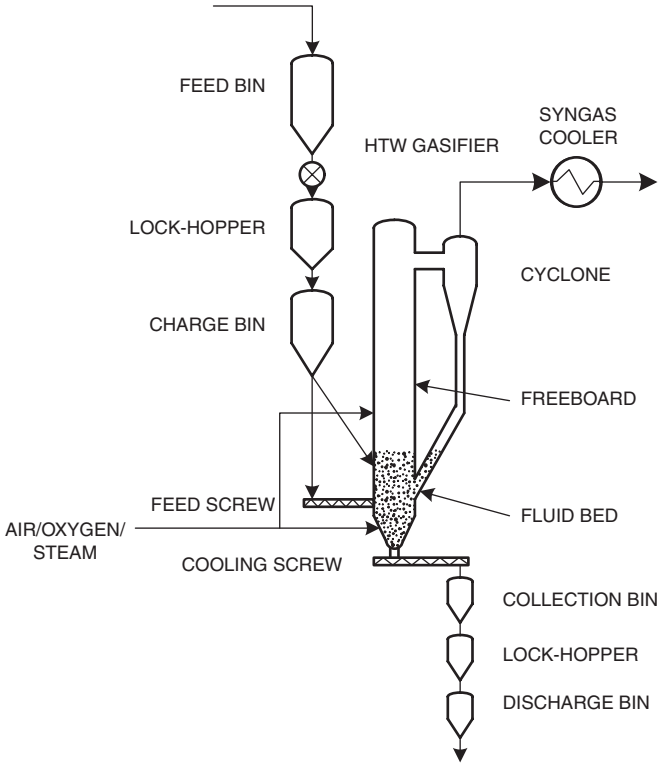

Figure 5.9 HTW gasifier.

Table 5.7
Analyses from HTW operation

Pressure		**bar**	
CO_2	mol%	17.0	17.10
CO	mol%	28.0	30.43
H_2	mol%	28.0	30.43
CH_4	mol%	5.0	5.03
N_2	mol%	5.0	4.00
H_2S	mol%	0.12	0.12
COS	mol%	0.01	0.01
NH_3	mol%	0.10	0.10
H_2O	mol%	16.8	11.7

Source: Adlhoch *et al.*, 1990, 1991.

These three plants have now been shut down. The HTW process is under consideration for an IGCC with carbon capture in Germany (Renzenbrink *et al.*, 2007).

In addition to the above, the HTW process can be applied to waste gasification (Adlhoch *et al.*, 2000). A 20 t/d atmospheric demonstration unit has been built in Japan.

5.2.4 HRL process

A fluid-bed process designed specifically for the high-moisture brown coal in Victoria, Australia, was developed initially by the State Electricity Commission of Victoria and later by HRL Limited over the period 1989–1998. The most striking feature of this process is that it uses hot syngas from an air-blown CFB gasifier in a direct contact co-current drier to dry the feed coal, which can contain 60–67% moisture. The process has been demonstrated for a total of 1200 hours using 240 t/d brown coal. The plant, located at Morewell, in Victoria's Latrobe Valley coal fields, operated at 25 bar and the syngas was used to fire a 5 MW Typhoon gas turbine. A 400 MW demonstration plant is being planned by a joint venture between HRL and Harbin Power Engineering, with commercial operation scheduled for 2009/2010. The plant is to be located at Loy Yang, a brownfield site close to Morewell (Anon, 2007).

Figure 5.10 shows the gasification and drying sections of the overall process, which is named Integrated Drying Gasification Combined Cycle (IDGCC). The incoming coal is crushed and screened to about 10 mm top size. For very high-moisture coals an entrained flow steam pre-drier can be used to balance the heat load on the main drier. The coal is pressurized in lock-hoppers to a pressure of about 25 bar and fed via a screw feeder into the hot syngas leaving the gasifier. The dried coal, which has a residual moisture content of about 5–10%, is separated in a cyclone and then fed to the air-blown gasifier. The gasification air is bled from the compressor of the gas turbine. The syngas, which now contains most of the water vapor from the coal feed, leaves the drying section at a temperature of about 200–250°C and is routed to a candle filter to remove entrained solids. The cleaned gas is subsequently fed to the combustor of the gas turbine.

In the demonstration plant the gas to the turbine had a low target heating value of 4.1 MJ/kg (wet basis), but this was achieved with only one (probably not too wet) coal. Values in the range of 3–3.5 MJ/kg were more typical of other coals. To comply with the target 4.1 MJ/kg, some water can be removed from the gas in an ammonia scrubber after the filtering step.

The process has a energy efficiency of 38–41% (HHV) when using Latrobe valley brown coal, which is high considering the moisture content.

5.2.5 BHEL gasifier

Another technology developed specifically for local coals and conditions is the pressurized fluid-bed gasifier of Bharat Heavy Electricals Limited (BHEL). With the exception of some lignite in the south, most of India's extensive coal reserves

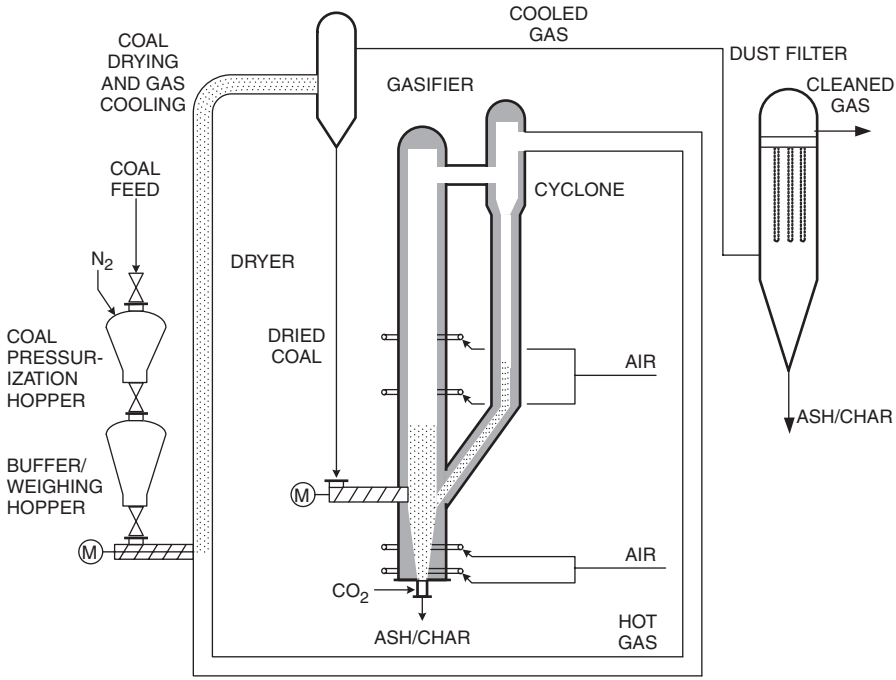

Figure 5.10 Gasification and drying section of HRL's IDGCC process (source: Johnson, 2000).

have a very high ash content – typically about 40% – so there is a significant saving in oxygen by choosing a non-slagging system. BHEL initially developed a moving-bed gasifier and built a 6.2 MW_e IGCC test facility at its Tiruchirapalli site to demonstrate combined cycle power generation with high-ash, sub-bituminous Indian coals. The plant operated for about 5500 hours, including 1100 hours in IGCC mode. After testing an 18 t/d process and equipment development unit at the site, BHEL then retrofitted a 165 t/d air-blown fluid-bed gasifier of its own design to the IGCC. Tests were conducted at pressures between 3 and 10 bar. Operating temperatures have ranged between 980 and 1050°C (Viswanathan *et al.*, 2006).

BHEL is currently developing a 125 MW_e IGCC demonstration plant at Auraiya in Uttar Pradesh.

5.2.6 Circulating fluidized-bed (CFB) processes

The characteristics of a circulating fluidized bed combine many advantages of the stationary fluidized bed and the transport reactor. The high slip velocities ensure good mixing of gas and solids, and thus promote excellent heat and mass transfer. Small particles are converted in one pass, or are entrained, separated from the gas,

and returned via an external recycle. Larger particles are consumed more slowly and are recycled internally inside the bed until they are small enough for external recycling. The CFB operates with a much higher circulation rate than a classical stationary bed, thus creating a specific advantage in the higher heating rate experienced by the incoming feed particles. This significantly reduces the tar formation during the heating up process.

More recently, the focus of new designs for fluid-bed gasifiers has shifted from the lower velocity bubbling beds to higher velocity circulating or transport-type designs, which feature higher char circulation rates with consequent improvements to the overall carbon conversion. Another advantage of the circulating fluid beds is the fact that the size and shape of the particles is less important. This is one of the reasons why this type of gasifier is eminently suitable for the gasification of biomass and wastes, of which the size, shape, and hence the fluidizing characteristics, are even more difficult to control than of coal.

There are two companies offering CFB gasification systems: Envirotherm and Foster Wheeler. The fundamental technologies supplied by these two companies are similar, although there are naturally a number of differences in detail. The Envirotherm atmospheric CFB technology was originally developed by Lurgi for alumina calcination and later, during the 1980s, it was adapted for the combustion of coal. It has since been applied to gasification of biomass.

Figure 5.11 illustrates the Lurgi circulating fluid-bed gasifier.

The CFB system comprises the reactor, an integral recycle cyclone and a seal pot. The high gas velocities (5–8 m/s) ensure that most of the larger particles are entrained and leave the reactor overhead. The solids separated from the gas in the cyclone are returned to the reactor via the seal pot. The gasifying agent, usually air, is fed as primary air through the nozzle grate and, as secondary air, at a level above the fuel supply point. For biomass applications the fuel must undergo size reduction to 25–50 mm (Greil *et al.,* 2002).

The Foster Wheeler circulating fluid-bed technology (originally Ahlstrom) was developed in the environment of the Scandinavian forestry industry, and is discussed further under biomass gasifiers in section 5.5.

5.2.7 The KBR transport gasifier

Fluid-bed gasification has also been developed in the high velocity regime. Such a gasifier is the Kellogg Brown and Root (KBR) transport gasifier (see Figure 5.12), for which a gas velocity in the riser of 11–18 m/s is reported (Smith *et al.*, 2002). The objective of this development was to demonstrate higher circulation rates, velocities and riser densities than in conventional circulating beds, resulting in higher throughput and better mixing and heat transfer rates.

The fuel and sorbent (limestone for sulfur removal) are fed to the reactor through separate lock-hoppers. They are mixed in the mixing zone with oxidant and steam, and with recirculated solids from the standpipe. The gas with entrained solids

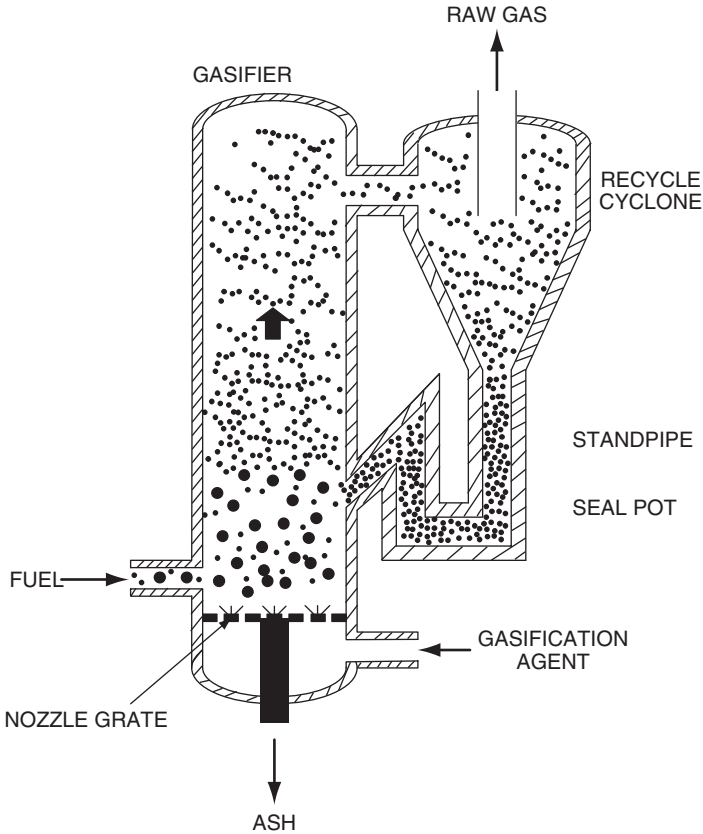

Figure 5.11 Lurgi circulating fluid-bed gasifier (source: Greil and Hirschfelder, 1998).

moves up from the mixing zone into the riser. The riser outlet makes two turns before entering the disengager, where larger particles are removed by gravity separation. Smaller particles are largely removed from the gas in the cyclone. The solids collected by the disengager and cyclone are recycled to the mixing zone via the standpipe and J-leg.

The gas is cooled in a syngas cooler prior to fine particulate removal in a candle filter. In the 2 to 3 t/d demonstration facility in Wilsonville, Alabama, both ceramic and sintered metal candles have been tested. The temperature of the test filter can be varied between 370 and 870°C by bypassing the syngas cooler.

The sorbent added to the fuel reacts with the sulfur present to form CaS. Together with a char–ash mixture, this leaves the reactor from the standpipe via a screw cooler. These solids and the fines from the candle filter are combusted in an atmospheric fluid-bed combustor.

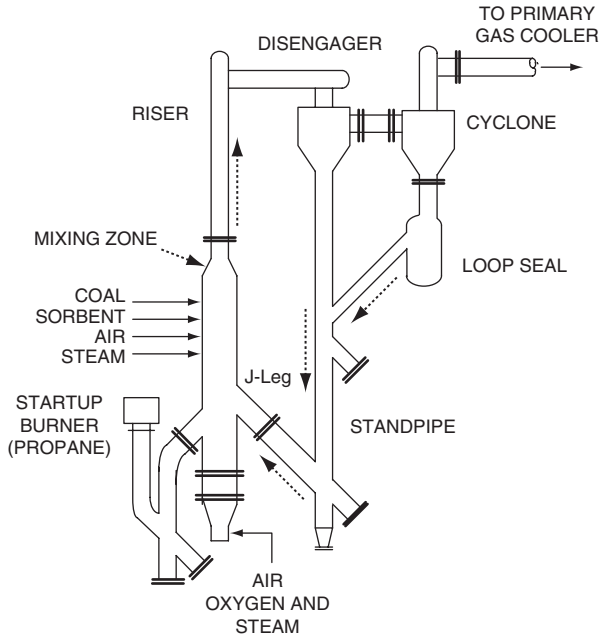

Figure 5.12 KBR transport gasifier (source: Smith *et al.*, 2002).

The transport reactor was operated in combustion mode from 1997 to 1999. Between September 1999 and 2002 the plant was operated over 3000 hours in gasification mode, most of this with air as oxidant, and has now (2007) logged a total of over 9000 hours' operation, including over 1700 hours with oxygen. The focus has been predominantly on low-rank coals, with nearly 2000 hours operation on PRB coal in 2005 (Wallace *et al.*, 2006). Average carbon conversion rates are about 95%, and values of up to 98% have been achieved. Gasification takes place at 900–1000°C and pressures between 11 and 18 bar.

Although the process can be operated either air- or oxygen-blown, the economics of IGCC applications tend to favor air (Rogers *et al.*, 2005). This is discussed in more detail in section 6.10.

A 285 MW_e demonstration plant to be built at Stanton, Florida, is in detailed engineering, with scheduled commercial operation due for mid-2010 (Pinkston, 2006).

5.2.8 Agglomerating fluid-bed processes

The idea behind agglomerating fluid-bed processes is to have a localized area of higher temperature where the ash reaches its softening point and can begin to fuse. The purpose of this concept is to allow a limited agglomeration of ash particles that, as they grow and become too heavy to remain in the bed, fall out at the bottom. This

preferential separation of low-carbon ash particles is designed to permit a higher carbon conversion than conventional fluid-bed processes.

A potential advantage for such processes over conventional fluid beds is that the problem of a leachable ash is less serious because of the ash agglomeration step incorporated near the burner(s) in the bottom of the reactor. The burner(s) in these gasifiers are in fact oxygen/air lances that have two functions: introducing the fluidizing gas, and also creating a hot region where ash agglomeration occurs. As mentioned before, such two-in-one features are nice, but always put restrictions on the operation when trying to operate in the "no-go" temperature range between the ash softening point and the ash melting point.

Two processes have been developed using this principle: the Kellogg Rust Westinghouse (KRW) process, and the U-Gas technology developed by the Institute of Gas Technology, now the Gas Technology Institute (GTI).

The 100 MW IGCC Piñon Pine plant near Reno, Nevada, uses the KRW process. This plant could not be started up successfully, primarily because of difficulties in the hot gas filtering section (US Department of Energy, December 2002).

U-Gas technology

The initial development of the U-Gas technology goes back to the 1970s, with the construction and operation of a 24 t/d pilot plant. A modified version for biomass, RENUGAS, was then taken on stream in 1985 in a 10 t/d pilot plant. Commercial plants include a 80 t/d high pressure coal-fired plant in Tampella, Finland, in 1980 by Tampella Power; a 100 t/d high pressure bagasse-fired RENUGAS demonstration unit in Hawaii in 1995; and eight 150 t/d low pressure coal-fired units in Shanghai. The process has now been licensed by Synthesis Energy Systems, which is building further plants in China (Vail, 2007). Further developments on biomass applications were made in Finland. For details, see "Carbona" in section 5.5.1.

Pre-crushed coal is fed into the gasification reactor via a lock-hopper, as shown in Figure 5.13. The gasification takes place in the fluid bed, which is maintained by the gasification medium, which can be air or oxygen and steam. The gasification medium is introduced into the bed via a sloping grid, which serves as both distributor and ash outlet. The ash is discharged through a lock-hopper, which also contains a quench bath.

The product gas discharged from the top of the gasifier still contains fine particulate matter, which is separated out in two or three cyclones for recycling to the bed.

A more detailed description of the process is contained in Reimert and Schaub (1989) or GTI (2007).

5.2.9 Development potential

Many fluid-bed gasification processes have been and are being developed, but none of them incorporate the use of a heat carrier (sand and/or ash and/or char) in which

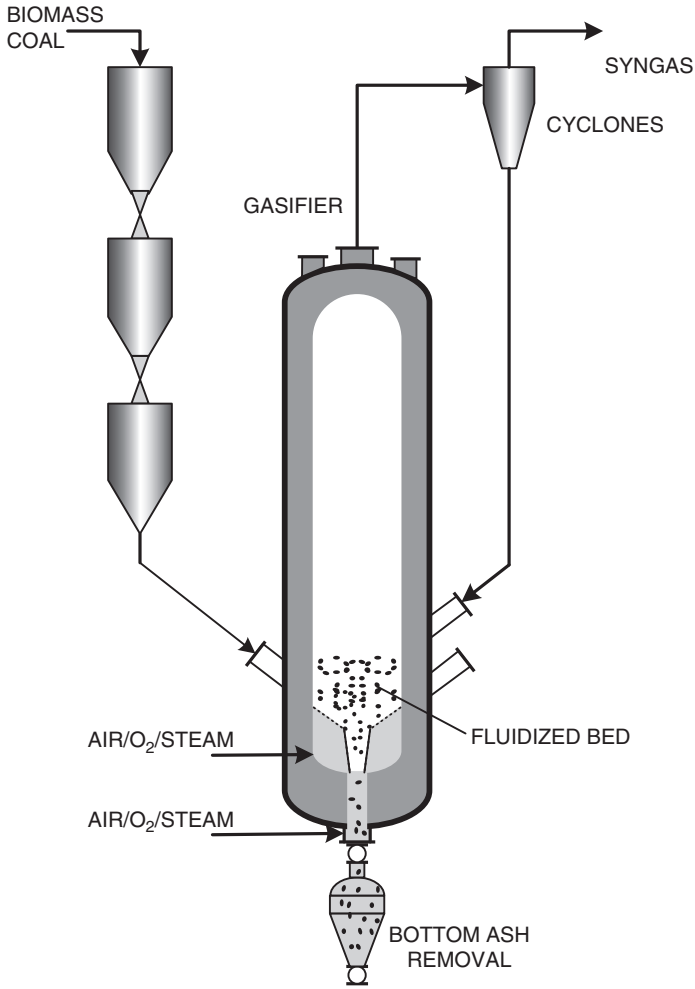

Figure 5.13 U-Gas gasifier (source: GTI, 2007).

the tars are combusted and char reacts with the gasifying agent to produce synthesis gas and/or fuel gas. Such a system can produce pure syngas without the need for an air separation unit (ASU). Moreover, the gas is free of tars and the carbon conversion virtually complete.

An example of a simplified process scheme in which the problems with tar are circumvented is shown in Figure 5.14 (Holt and van der Burgt, 1997). The feed coal is fed to a bubbling fluid-bed pyrolyser, which is fluidized with a small amount of

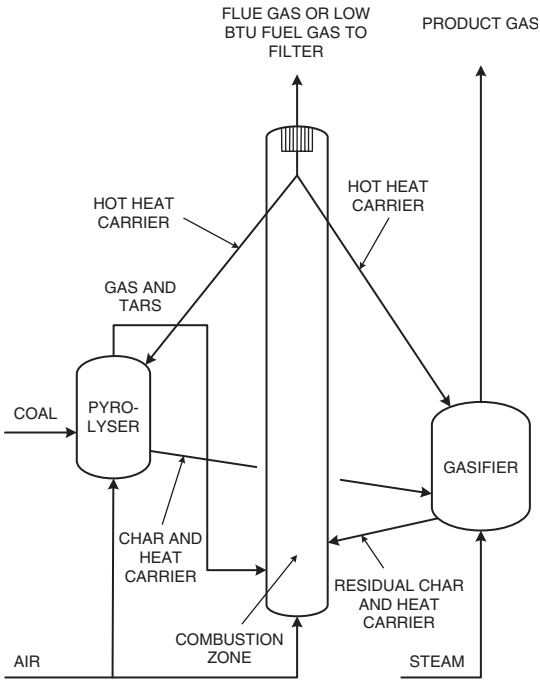

Figure 5.14 Modified twin reactor system.

air and/or steam and uses a relatively small part of the hot heat carrier from the top of the riser (entrained bed) as a heat source. The complete or partial combustion of all gases and tars from the pyrolyser takes place with air in the bottom of the riser reactor. Moreover, all residual carbon left on the heat carrier leaving the gasifier proper is (partially) combusted in the riser. The hot gases leaving the top of the riser via cyclones have the typical composition of a low Btu fuel gas or of a flue gas, depending on whether partial or complete combustion is used. Ash that is virtually free of carbon is removed from the system as a bleed from the cyclones in the top of the riser. In principle, two modes of operation are possible.

When synthesis gas is the required product, most of the hot heat carrier leaving the top of the riser is used in the endothermic gasifier section where the char leaving the pyrolyser reacts with steam according to the water gas reaction. When insufficient pyrolysis products are available for (partial) combustion in the riser, some additional coal and/or oil may be injected into the bottom of the riser, or the char slip from the gasifier to the riser may be increased. Where fuel gas is the required product, the gasifier reactor may be omitted.

5.3 ENTRAINED-FLOW PROCESSES

As discussed at the beginning of this chapter, the principal advantages of using entrained flow are the ability to handle practically any coal as feedstock, and to produce a clean, tar-free gas. Additionally, the ash is produced in the form of an inert slag or frit. This is achieved with the penalty of a high oxygen consumption, especially in the case of coal-water slurries or coals with a high moisture or ash content, as well as additional effort in coal preparation.

Nonetheless, even if entrained flow has been selected as the means of contacting the fuel and gasification agent, this still leaves a considerable variety of alternatives open in the design approach, as can be judged from Table 5.8, which outlines characteristics of some important entrained-flow processes.

The majority of the most successful coal gasification processes that have been developed after 1950 are entrained-flow, slagging gasifiers operating at pressures of 20–70 bar and at high temperatures of at least 1400°C. Entrained-flow gasifiers have become the preferred gasifier for hard coals, and have been selected for the majority of commercial-sized IGCC applications.

Table 5.8
Characteristics of important entrained-flow processes

Process	Stages	Feed	Flow	Reactor wall	Syngas cooling	Oxidant
Koppers-Totzek	1	Dry	Up	Jacket	Syngas cooler	Oxygen
Shell SCGP	1	Dry	Up	Membrane	Gas quench and syngas cooler	Oxygen
Prenflo	1	Dry	Up	Membrane	Gas quench and syngas cooler	Oxygen
Siemens	1	Dry	Down	Membrane	Water quench and/or syngas cooler	Oxygen
GE Energy	1	Slurry	Down	Refractory	Water quench or syngas cooler	Oxygen
E-Gas	2	Slurry	Up	Refractory	Two-stage gasification	Oxygen
MHI	2	Dry	Up	Membrane	Two-stage gasification	Air
Eagle	2	Dry	Up	Membrane	Two-stage gasification	Oxygen

In entrained-flow gasifiers, the fine coal particles react with the concurrently flowing steam and oxygen. All entrained-flow gasifiers are of the slagging type, which implies that the operating temperature is above the ash melting point. This ensures destruction of tars and oils and, if appropriately designed and operated, a high carbon conversion of over 99%, although some coal-water slurry-fed plants do not achieve this in a single pass and must recycle carbon to achieve it. Moreover, entrained-flow gasifiers produce the highest quality synthesis gas because of the low methane content. Entrained-flow gasifiers have relatively high oxygen requirements, and the raw gas has a high sensible heat content. The various designs of entrained-flow gasifiers differ in their feed systems (dry coal fed in a high-density fluidized state or coal-water slurries), vessel containment for the hot conditions (refractory or membrane wall), configurations for introducing the reactants and the ways in which sensible heat is recovered from the raw gas. The two best-known types of entrained-flow gasifier are the top-fired coal-water slurry-feed gasifier, as used in the GEE process, and the dry coal feed side-fired gasifier, as developed by Shell and Krupp-Koppers (Prenflo). Furthermore, there is the dry coal feed top-fired Siemens gasifier. Simple sketches of these three reactor types are given, together with temperature profiles for both the coal/char and the gas, in Figures 5.15–5.17. Some gasifiers (e.g. ConocoPhillips' E-Gas gasifier) use two stages to improve thermal efficiency, to reduce the sensible heat in the raw gas and to lower the oxygen requirements. In the present coal-water slurry-feed gasifiers, a substantial part of the reactor space is used to evaporate the water of the slurry. This is reflected in the temperature profile of this gasifier (see Figure 5.15).

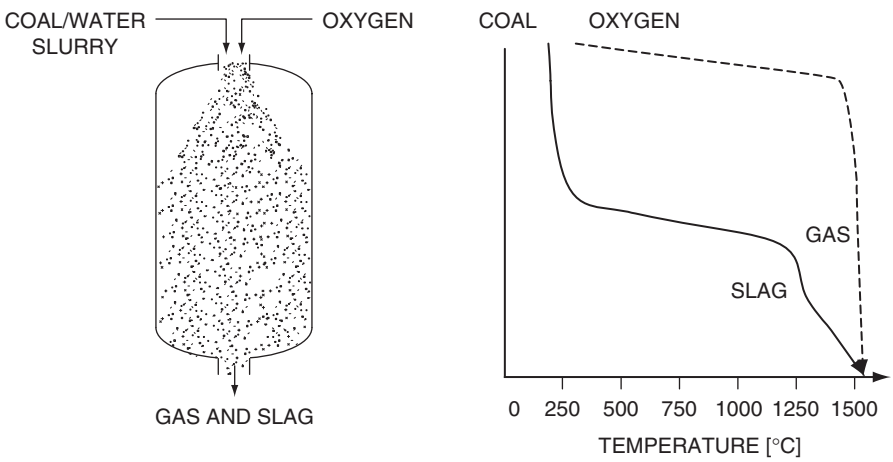

Figure 5.15 Top-fired coal-water slurry feed slagging entrained-flow gasifier.

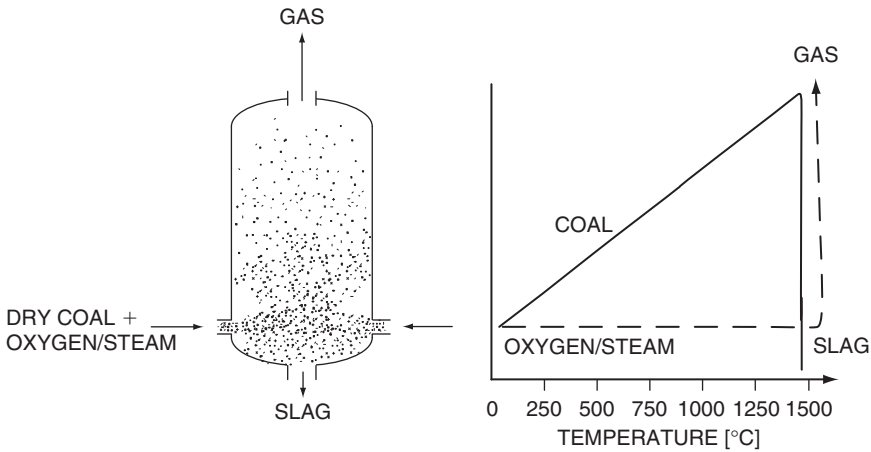

Figure 5.16 Side-fired dry coal feed slagging entrained-flow gasifier.

Bridging the gap between atmospheric and pressurized gasifiers, it should be mentioned that at the Corus blast furnaces in IJmuiden in the Netherlands pulverized coal has been injected into the raceway of the blast furnace since the early 1990s. In the largest blast furnace, 2300 tpd of coal is injected through 38 tuyère type burners using a mixture of air and oxygen as blast. The blast furnace has a pressure of 3 bar in the raceway and the temperature is about 2000°C.

In contrast to the moving-bed and fluid-bed processes, virtually all types of coals can be used in these processes, provided they are ground to the correct small size. The coals may be heavily caking, and range from sub-bituminous coals to anthracite. Brown coal and lignite can in principle be gasified, but for economic reasons this is generally not very attractive because of the ballast of inherent moisture that has to be evaporated and heated to the high temperatures required. High-ash coals are also not selected by preference, because all the ash has to be melted and that also constitutes thermal ballast to the gasifier. Coals with very high ash melting points are generally fluxed with limestone in order to lower the ash melting point and hence the operating temperature. This improves the process efficiency, reduces the oxygen consumption and enables the use of a refractory-lined reactor. A typical plot showing the loss of efficiency with increasing ash content in the feed is shown in Figure 5.18. Generally, the economic limit for slurry-feed gasifiers is about 20% ash, whereas for dry feed gasifiers it is about 40%.

Currently, most entrained-flow gasifiers are single-stage gasifiers. The fuel is introduced together with the blast via one or more burners. The blast is usually pure oxygen or a mixture of oxygen and steam, but for some applications may be a mixture of oxygen and carbon dioxide.

The ash produced in entrained-flow gasifiers is similar to that of the slagging moving-bed gasifiers, and consists of the same fine, black, inert, gritty material.

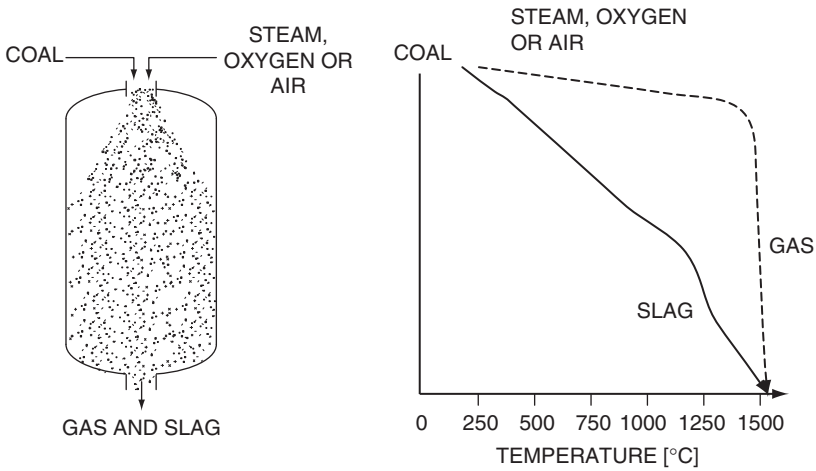

Figure 5.17 Top-fired dry coal feed slagging entrained-flow gasifier.

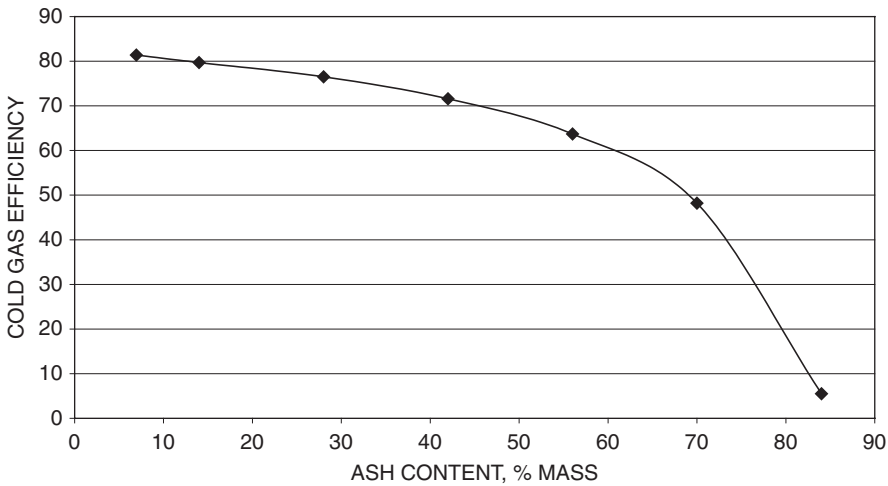

Figure 5.18 Cold gas efficiency as a function of the ash content of the coal.

Reactor modeling

The upflow reactors, as employed in the Shell Coal Gasification Process (SCGP) and Prenflo reactors, can be essentially considered as continuously stirred tank reactors (CSTRs). The reason is the very large recirculation inside the reactor caused by small temperature differences and the way the reactants are introduced. In contrast

to the fluid-bed gasifiers, the carbon conversion is almost 100%, because most of the ash leaves the reactor as slag that is very low in carbon. Moreover, measures can be taken to ensure that large carbon particles tend to remain longer in the reactor. This can be accomplished, as in the Siemens gasifier, by introducing some swirl in the top burner or by tangential firing as, for example, in the EAGLE gasifier. The largest coal particles are thus preferentially deposited on the liquid slag flowing vertically downwards along the reactor wall. The coal particles having a lower density than the slag will float like "icebergs" on the slag. The velocity of this slag layer is much lower than of the gas in the reactor, and thus the ideal situation is obtained where the larger coal particles have the longest residence time. Careful design is important, as too much swirl causes reverse flow in the center of the reactor and can lead to unwanted situations.

Modeling of the second non-slagging stage of the E-Gas reactor is also not simple because of the evaporation of water and the pyrolysis reactions. The first slagging stage with the side introduction of coal-water slurry and recycled char in the E-Gas process can again be described as a CSTR.

CFD modeling of entrained-flow reactors has been initiated, and first published results are encouraging (Bockelie *et al.*, 2002).

5.3.1 General considerations

Dry coal feed gasifiers

As discussed in Chapter 2, dry coal feed gasifiers have the advantage over coal-water slurry feed gasifiers in that they can operate with almost the minimum amount of blast. This implies in practice that they have a 20–25% lower oxygen consumption than coal-water feed gasifiers. Also, shown in section 2.4, dry coal feed entrained-flow gasifiers have in principal an additional degree of freedom that makes it possible to better optimize the synthesis gas production. Moreover, it is possible to adjust the H_2/CO ratio slightly. In practice, operation at a CO_2 content of the gas of 0.5–4 mol% and a temperature of about 1500°C is generally adhered to.

Single-stage gasifiers. In particular, the single-stage entrained-flow gasifiers yield a high gas purity with only traces of hydrocarbons and with a CH_4 content of well below 0.1 mol%. Together with the low CO_2 and high carbon conversion, this ensures that almost all carbon in the feed is converted into CO, and hence a non-selective acid gas removal can be employed, as the H_2S/CO_2 ratio is such that the combined acid gas may be routed to the Claus plant sulfur recovery without concentration. On the other hand, CO-shifting to produce hydrogen requires more sophisticated techniques than for slurry-feed gasifiers. Details of the gas treating will be discussed in Chapter 8.

Examples of single-stage dry coal feed gasifiers are the SGGP process, the Prenflo process and the Siemens process. The dry coal feed process SCGP is used in a 250 MW IGCC plant in Buggenum, the Netherlands, and the Prenflo process in a 300 MW IGCC plant in Puertollano, Spain. Siemens has a 600 t/d plant operating on a variety of solid and liquid feedstocks in Schwarze Pumpe, Germany.

Process performance. One of the most striking features of single-stage dry coal entrained-flow slagging gasifiers is that the gas composition is very insensitive to the coal quality. In the case of low-rank coals and high-ash coals, however, the gas yields suffer because of the ballast of water and ash, respectively. The performance of a variety of coals is given in Table 5.9. The coal analyses are those of Table 4.4.

Two-stage gasifiers. An improvement in the process efficiency can be obtained by adding a second non-slagging stage to the first slagging stage of an entrained-flow gasifier.

Based on the standardized, idealized conditions of Appendix E, present state-of-the-art single-stage pressurized entrained-flow gasifiers have an efficiency of 50% LHV for IGCC applications (see data in Table 5.10). The process efficiency of these gasifiers can be increased by the introduction of a second non-slagging stage, as applied in the MHI or EAGLE processes. The second stage results in a higher cold gas efficiency and lower oxygen consumption. Efficiencies are 50 and 50.9% for the one- and two-stage process based IGCC, respectively, when operating with a dry coal feed system (see Table 5.10). (The calculation basis for these data is given in Appendix E.)

This is achieved by operating the first stage under high temperature slagging conditions with only part of the reactants, and then adding the remainder in a second stage where the hot gas from the first stage drives the endothermic reactions in the second, non-slagging stage. In practice, the current processes all operate the first stage with a deficit of coal with a second-stage coal feed. In principle, however, alternative staging concepts could be used – for example, with steam addition as the second stage. Each staging concept has its advantages and disadvantages. With a coal feed second stage, there is the fact that a certain amount of tars will inevitably leave the reactor with the syngas. The extent to which this constitutes a real problem depends on the feedstock quality and the actual outlet temperature of the reactor. The alternative of supplying all the fuel to the first, slagging stage and only moderator to the second, non-slagging stage creates a situation in which the fuel to the second stage is present as unconverted char from the first stage so that the syngas would be tar free. On the other hand, in the context of a dry feed system, this requires considerably more steam than for a single-stage reactor. This increases the amount of process condensate to be handled and degrades some of the sensible heat in the gasifier exit gas to condensing temperature levels.

Irrespective of the choice of staging arrangement, there are a number of interesting aspects to be considered. The lower temperature of the second stage will require

Table 5.9
Performance of various types of coals in dry coal feed entrained-flow gasifiers

Coal			Gas analysis of dry gas, mol %						Miscellaneous		
Country	Region	Classification	CO_2	CO	H_2	N_2	Ar	H_2S	Nm^3 CO + H_2/tonne maf coal	Nm^3 O_2/Nm^3 CO + H_2	kg steam/Nm^3 CO + H_2
Germany	Rhein	Browncoal	8	61	29	1	1	0.2	965	0.33	0
USA	N. Dakota	Lignite	10	62	26	1	1	0.1	935	0.36	0
USA	Montana	Sub-bituminous	1	63	34	1	1	0.4	1950	0.26	0.06
USA	Illinois	Bituminous	1	61	35	1	1	1.5	2030	0.25	0.09
Poland	Typical	Bituminous	1	58	39	1	1	0.2	2290	0.20	0.15
S. Africa	Typical	Bituminous	1	64	33	1	1	0.3	2070	0.26	0.09
China	Datung	Bituminous	1	66	31	1	1	0.2	2060	0.27	0.09
India	Typical	Bituminous	2	62	33	1	1	0.5	1730	0.31	0
Australia	Typical	Bituminous	1	62	34	1	1	0.3	2100	0.26	0.07
Germany	Ruhr	Anthracite	1	65	31	1	1	0.2	2270	0.26	0.13

more residence time than for a single-stage gasifier, and in practice there will be the need to reckon with some carbon carry-over in the syngas. On the other hand, these lower temperatures allow the use of a refractory wall in the second stage, since it does not experience the very high temperatures and liquid slag of a single-stage design. This represents a considerable cost saving compared with the membrane wall used in some single-stage designs.

The second stage is non-slagging. The particulate matter in the syngas contains unreacted carbon and dry ash. This is removed from the gas downstream of the syngas cooler, and recycled to the first stage. In this way, almost all the ash is removed from the system as slag.

The overall effect is that a slagging gasifier is obtained in which the oxygen consumption is almost as low as for a gasifier operating at the temperature at which the gases leave the second non-slagging stage. This has the following process advantages:

- No gas quench and a lower syngas cooler duty
- A higher cold gas efficiency and a 20% lower oxygen consumption

The methane content of the gas will increase slightly compared with the single stage gasifier and so will the CO_2 content.

A drawback of incorporating a second stage to a dry feed gasifier is the added complexity and the higher steam consumption. The extra efficiency is about 1 percentage point (see Table 5.10).

Table 5.10
IGCC efficiencies for various entrained-flow gasifiers

Process	Syngas cooling	Gasifier conditions	IGCC efficiency, %LHV Feed
Slurry feed	Water quench	64 bar 1500°C	37.8
Slurry feed	Gas quench	64 bar 1500°C	43.6
Slurry feed 320ºC	Gas quench	64 bar 1500°C	48.8
Dry feed	Gas quench	32 bar 1500°C	50.0
Dry feed	Two-stage gas quench	32 bar 1500/1100°C	50.9

Note: Efficiencies are based on the standardized, idealized conditions of Appendix E.

Coal-water slurry feed gasifiers

The big advantage of coal-water slurry feed gasifiers is the more elegant method of pressurizing the coal. Lock-hoppers as used in dry coal feed gasifiers are costly

and bulky equipment with complex valve systems that have to provide a gas-tight block in a dusty atmosphere. Pumping a coal-water slurry is not a simple operation either, but is definitely less complex than lock-hoppering. In addition, the practical ultimate pressure for dry pulverized-coal lock-hoppers is about 50 bar, whereas for coal-water slurry pumps the pressure could, in principle, be as high as 200 bar.

As there is always a surplus of gasifying agent to be added to the gasifier, there is less benefit in adding a non-slagging second stage. Only when coal is added to the second stage, as is done in the E-Gas process, are some of the disadvantages of having so much water in the feed eliminated.

Single-stage gasifiers. In a single-stage coal-water slurry feed gasifier, all the water in the slurry must be evaporated and raised to the full outlet temperature of the slagging operation. This imposes a considerable penalty on the cold gas efficiency of the process to offset against the simplified feed system. This is also reflected in a higher oxygen consumption compared with a dry feed system. Furthermore, space in the reactor is required for the evaporation process.

The high water vapor content of the hot, raw syngas also influences its composition. The CO shift reaction is driven further to the right, resulting in a higher H_2/CO ratio and higher CO_2 content than the equivalent dry-feed gasifier. Whether this is important or not will depend on the application under consideration. Additionally, the methane content will be even lower, although if the potential for higher pressures is exploited, this would tend to increase the methane content. However the methane content of all single-stage entrained-flow gasifiers is so small that this is unlikely to be of consequence.

Two-stage gasifiers. The main issues surrounding the staging of coal-water slurry feed gasifiers are similar to those for dry feed gasifiers. The efficiency of a two-stage gasifier is higher than that of a single-stage process for the same reasons as for the dry feed case. The disadvantages of a higher steam consumption described for dry feed gasifiers are however not applicable, as no steam is required in coal-water slurry feed gasifiers.

5.3.2 The Koppers-Totzek atmospheric process

Just as with moving-bed and fluidized-bed processes, the first entrained-flow slagging gasification process operated at atmospheric pressure. The atmospheric pressure Koppers-Totzek (KT) process was developed in the 1940s, and commercial units were built in Finland, Greece, Turkey, India, South Africa, Zambia and elsewhere, mostly for ammonia manufacture. The South African unit has been reported as achieving a 95% availability (Krupp-Koppers, 1996). In recent years, no new units of this type have been built.

Process description

The KT reactor features side-mounted burners for the introduction of coal and oxygen, a top gas outlet, and a bottom outlet for the slag. The early units had a capacity of 5000 Nm³/h and had two diametrically opposed burners that were situated in two diametrically opposed horizontal truncated cones (see Figure 5.19). Later units operated with four burners that increased the maximum capacity to 32,000 Nm³/h. The gas leaving the top of the gasifier at about 1500ºC is quenched with water near the top of the reactor to a temperature of about 900°C to render the slag non-sticky before it enters a water tube syngas cooler for the production of steam. The reactor has a steam jacket to protect the reactor shell from high temperatures. A significant portion of the sensible heat is transformed into low-pressure steam in the jacket, which represents a considerable energy penalty for the process. The burners are of

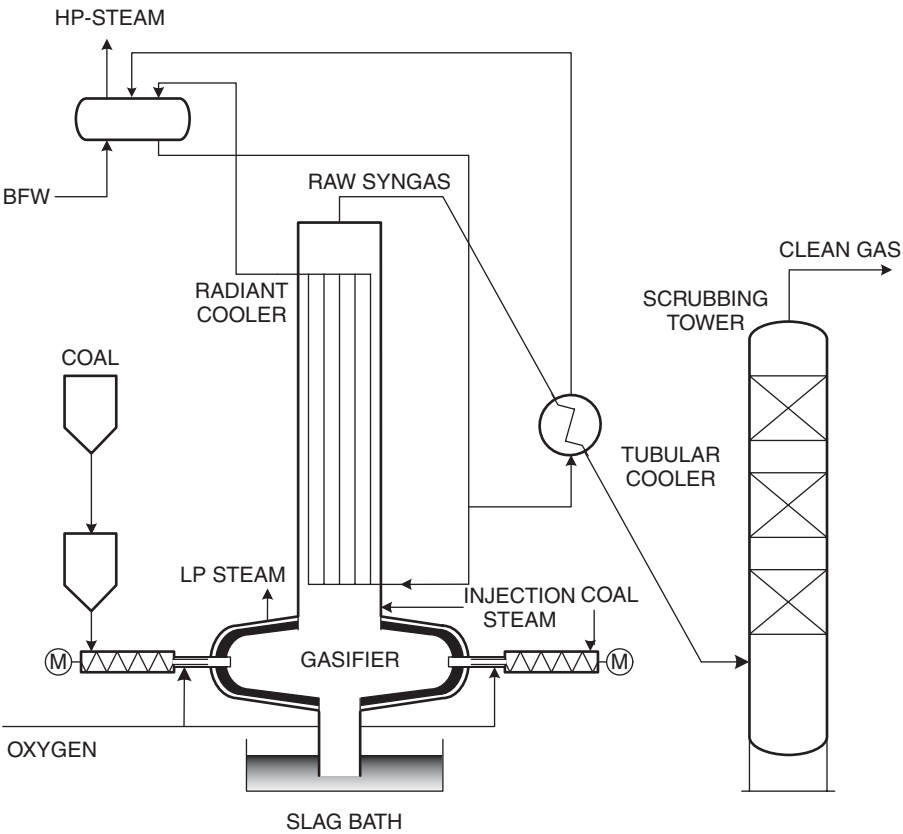

Figure 5.19 Koppers-Totzek gasifier.

the premix type, which means that the velocity in the burners must be quite high in order to avoid flash backs. For pressurized burners, pre-mixing is considered too dangerous and has therefore never been applied. The slag is quenched and granulated in a water bath underneath the reactor. The water in the slag bath also provides a water seal to avoid gas escaping via the bottom of the reactor.

5.3.3 Shell Coal Gasification Process (SCGP) and Prenflo process

The origin of both these processes goes back to the Koppers-Totzek process. Shell and Koppers jointly developed a pressurized version of the process, and in 1978 they started to operate a 150 t/d gasifier in Harburg, Germany. The main interest for Koppers was to have a better process available for the production of syngas. For Shell, the main interest at the time was the production of synthetic fuels from coal via the route of gasification and Fischer-Tropsch synthesis. After the joint Harburg unit, Koppers and Shell decided to develop the process further along separate routes. Subsequently, Shell built a 250 t/d demo unit in Houston, and Krupp-Koppers a 48 t/d demonstration Prenflo (pressurized entrained flow) unit in Fürstenhausen, Germany. Based on the work in these units, two commercial-scale plants were built as part of IGCC power stations. In 1994, a 2000 t/d Shell gasification unit was built for Demkolec in Buggenum in the Netherlands using internationally traded coal as original feedstock, and in 1997 Krupp-Koppers built a 3000 t/d Prenflo unit for Elcogas in Puertollano in Spain using a139 blend of high-ash coal and petcoke as feedstock. In the meantime, Uhde (successor to Krupp-Koppers) has entered an alliance with Shell, and the processes are jointly marketed under the Shell name. Shell has licensed 20 reactors of sizes between 900 and 4000 t/d to 15 various projects in China. At the time of writing, five of these are already in operation. Three further 2000 t/d units are currently being planned for Eemshaven for the Dutch utility Nuon, which currently owns the Buggenum plant (Van der Ploeg *et al.*, 2007).

Process description

The SCGP and Prenflo processes, which are very similar (Anon, 1990), feature an even amount (typically four, see Figure 5.20) of diametrically opposed burners in the side-wall at the bottom of the reactor through which the pulverized coal is introduced in a dense phase using an inert gas as carrier gas (van der Burgt and Naber, 1983). The small niches in which the burners are placed are a remnant of the truncated cones of the KT gasifiers. The vertical cylindrical part of the gasifier constitutes the main gasification volume. As a result, the gasifiers have become upflow units as far as the gas flow is concerned. Coal is ground in a milling and drying unit to a size of 90% below 90 μm, pressurized in lock-hoppers, transported as a dense phase in nitrogen or CO_2, and mixed near the outlet nozzle of the burner with

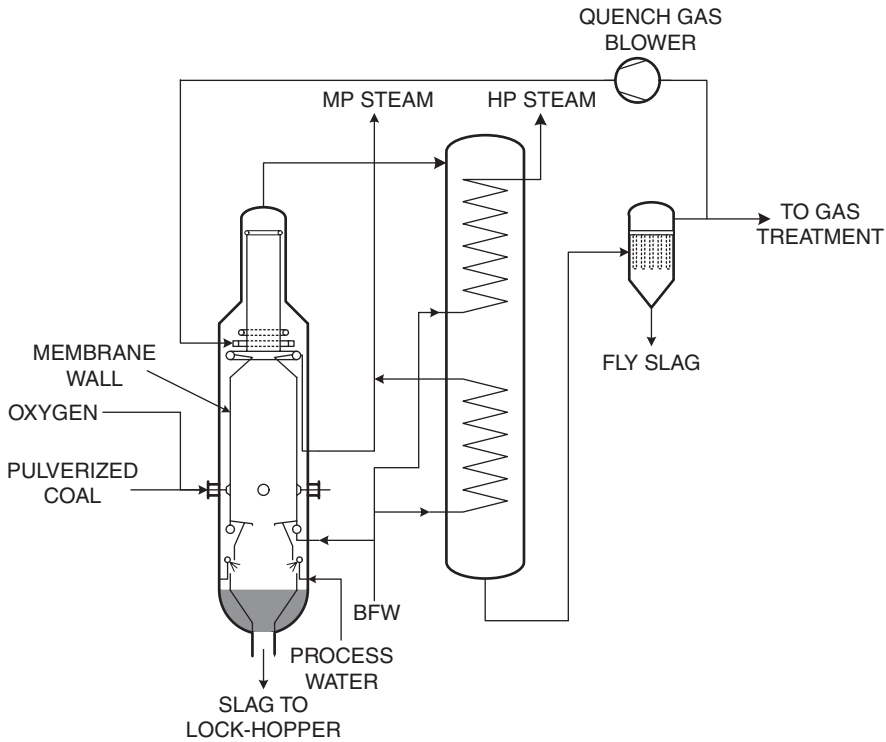

Figure 5.20 Shell Coal Gasification Process (adapted from Koopman *et al.*, 1993, reproduced with permission from Shell).

a mixture of oxygen and steam. The reactions are very fast, and after a residence time of 0.5–4 seconds the product gas leaves the reactor at the top, whereas the slag leaves through an opening in the bottom of the reactor where it is quenched in a water bath. The temperature in the gasifier is typically 1500°C and the pressure 30–40 bar. The sudden drop in temperature when entering the water bath causes the slag to solidify, and it breaks up into a fine, inert, glassy, black grit that may replace sand and aggregate in concrete. The granulated slag leaves the gasifier through a lock-hopper system where water is the continuous phase.

The reactor wall is a membrane wall construction that is studded and covered with a castible refractory mix that is rammed in to protect the metal wall from the direct radiation and the liquid slag. In the tubes, steam is generated that is used for additional power generation in the combined cycle (Anon, 1990). The heat loss through the wall is dependent on the quantity and quality of the slag and the size of the reactor, and lies generally between 2 and 4% of the heat of combustion of the coal feed. The gas produced consists roughly of two-thirds CO and one-third H_2. The hot gas leaving the slagging reactor is quenched to 900°C with cold recycle gas

of 280°C. The quench is designed in such a way that the hot gases and the slag do not come into contact with the wall before they are cooled to a temperature where the slag becomes non-sticky. After the quench, the gas enters a syngas cooler where steam is raised for use in the combined cycle. The gas leaves the syngas cooler at a temperature of about 280°C and passes a candle filter unit where the solids in the gas are removed. About half the gas is then recycled via a recycle gas compressor to be used as quench gas. The other half, being the net production, is further cooled in a water scrubbing section.

As an alternative to the syngas cooler Shell has recently introduced a water quench (Wolff, 2007). This has advantages over the syngas cooler when CO shift is planned immediately downstream of the gasifier, for example.

5.3.4 The Siemens SFG process

The Siemens SFG process was first developed by Deutsches Brennstoffinstitut, Freiberg, in 1975 for the gasification of the local brown coal and other solid fuels. It became known under the name GSP process. After the Noell Group acquired the technology in 1991 it was further developed to gasify waste materials and liquid residues. After a period under the name of Future Energy, this technology was acquired by Siemens in 2006.

The first GSP gasifier was built in 1984 at Schwarze Pumpe, Germany, with a thermal rating of 200 MW. Until German unification, the feedstock was a high-sodium lignite. Since 1990, it has operated on natural gas and waste liquids. Five 500 MW_{th} reactors are currently in fabrication for a large coal-to chemicals project in China with commissioning scheduled for 2009 (Hannemann *et al.*, 2007).

Process description

The SFG process features a top-fired reactor, where the reactants are introduced into the reactor through a single centrally mounted burner (Lorson *et al.*, 1995). This concept has a number of special advantages in addition to those generic to all dry feed systems. These include the simple axisymmetrical construction without penetrations through the cylinder wall, which reduces equipment costs. Secondly, the use of a single burner reduces the number of flows to be controlled to three (coal, oxygen and steam). Thirdly, slag and hot gas leave the gasification section of the reactor together, which reduces any potential for blockages in the slag tap, as well as allowing for both partial and total water quenches, depending on application.

Within this overall concept there are a number of different variations of reactor design for the SFG gasifier, which can be selected and optimized for different feedstocks. Figure 5.21 shows the reactor with a spirally-wound cooling screen, typically used for ash-containing conventional fuels (coal, brown coal) and liquids (residual oils, tars and sludges). The cooling screen is covered with a SiC castible and layers of solid and molten slag. A partial quench is included in the lower section of the reactor.

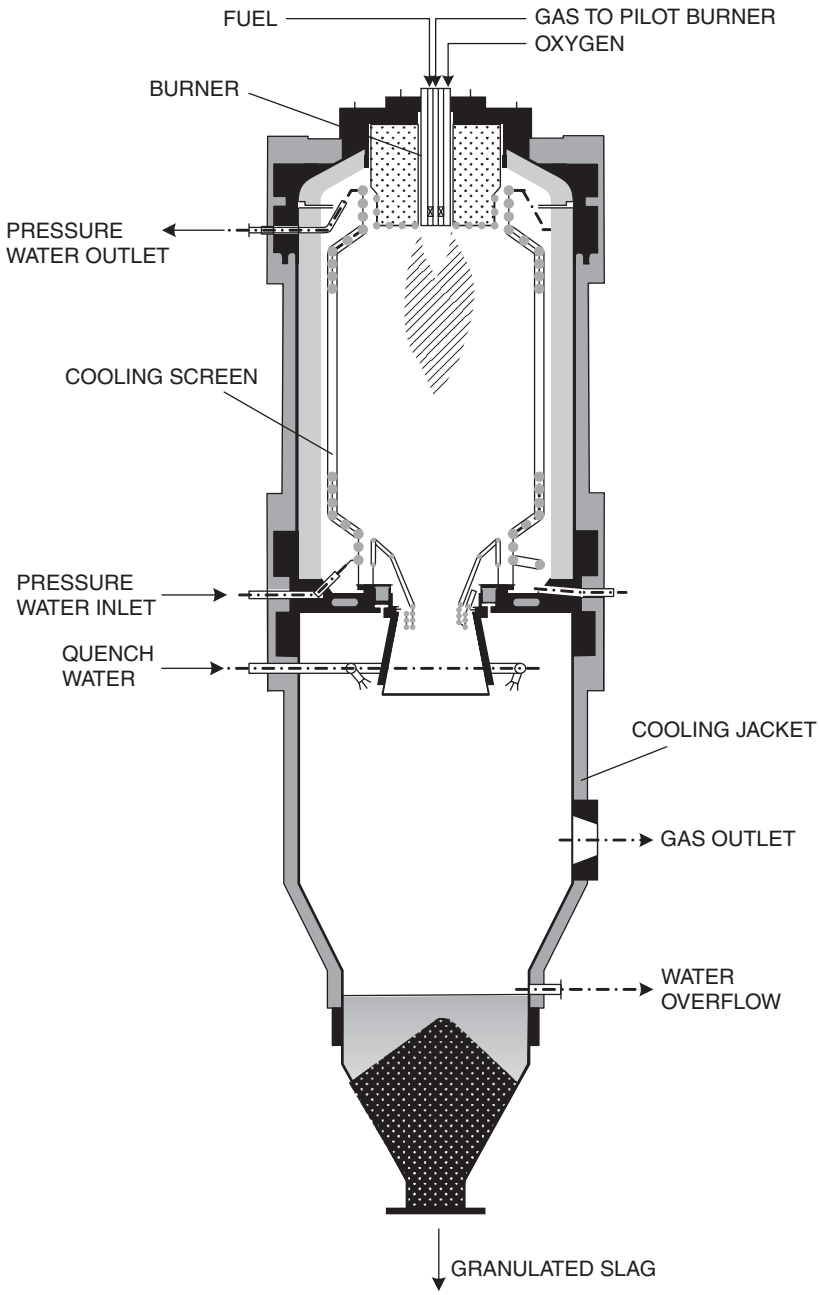

Figure 5.21 Siemens SFG gasifier with cooling screen (source: Future Energy GmbH).

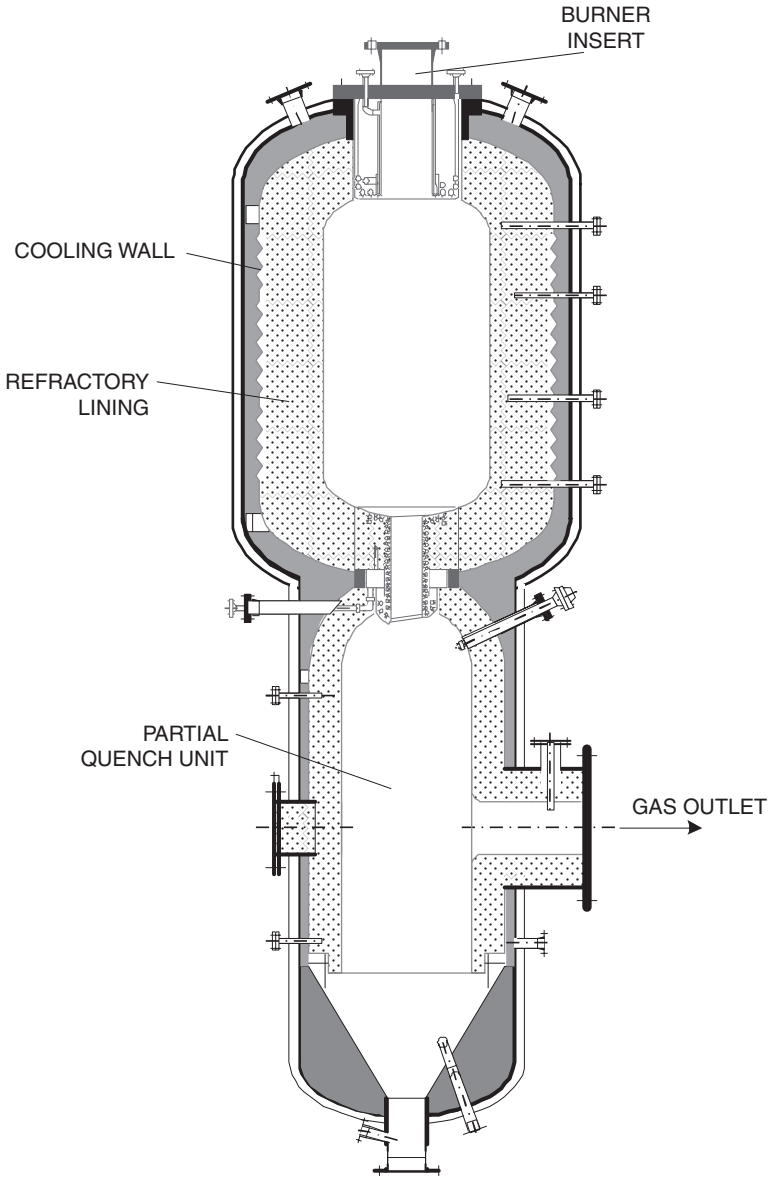

Figure 5.22 Siemens SFG gasifier with cooling wall (source: Future Energy GmbH).

A reactor with cooling wall is shown in Figure 5.22, which is used for applications with low- or zero-ash feeds such as gas or organic liquid wastes. A third type, which also uses a cooling screen but has a total quench, has been developed for black liquor applications.

5.3.5 The GE Energy process

The Texaco gasification process was developed in the late 1940s. Although the main focus at this time was on utilization of natural gas reserves, some work on coal gasification was also performed (Schlinger, 1984). The process achieved commercialization initially with gas feed (1950) and later with liquids (1956). The liquids technology is discussed in more detail in section 5.4. Against the background of a perceived medium-term oil shortage at the beginning of the 1970s, the previous work on coal gasification was taken up again. Both its background from the previous work on coal, as well as the decision to maintain many of the concepts already proven in commercial oil gasification service, allowed Texaco to develop its coal gasification technology in a relatively short space of time, despite the many differences in detail between coal and oil gasifiers.

Two demonstration-scale projects were operated in the late 1970s (RAG, Holten in Germany, and Cool Water in California), and three commercial-scale facilities were started up between 1983 and 1985 (two for Ube in Japan, and one for the Eastman plant at Kingsport, Tennessee) (Curran and Tyree 1998).

Since 1990, nine commercial plants have been brought into service – five in China and four in the United States. These have been predominantly for ammonia and electricity production, although two of the Chinese plants are for methanol and town gas production respectively. Three of the United States plants (Coffeyville, El Dorado and Delaware) use petroleum coke as feed. The fourth, Polk Power Station in Florida, is a 250 MW_e IGCC unit, which went on stream in 1996. A further eight coal-based plants of various sizes are due to be taken on stream in China during 2007 and 2008.

The process was acquired by GE Energy (GEE) from ChevronTexaco in 2004. Since that time intensive efforts at cost reduction have been made, in particular for the power market with the development of a semi-standardized "reference plant" for a 630 MW_e 60 Hz IGCC. A number of US utilities are currently (2007) going through the permitting process for new power plant on the basis of this design.

Process description

The GEE process for coal gasification uses a slurry feed downflow entrained-flow gasifier. The reactor shell is an uncooled refractory lined vessel. As with their oil and gas gasification processes, GEE maintains flexibility in syngas cooling concepts, offering a radiant boiler, a total water quench, and a combination of the two. The selection between these three alternatives is a matter of economics for the specific application. For the standardized 630 MW_e reference IGCC plant, GEE has chosen the radiant-quench configuration (Rigdon and Avidon, 2005).

The coal or petcoke feedstock is wet-milled to a particle size of about 100 μm and slurried in essentially conventional equipment. The slurry is charged to the reactor with a membrane piston pump. The reactor pressure is typically about 30 bar for

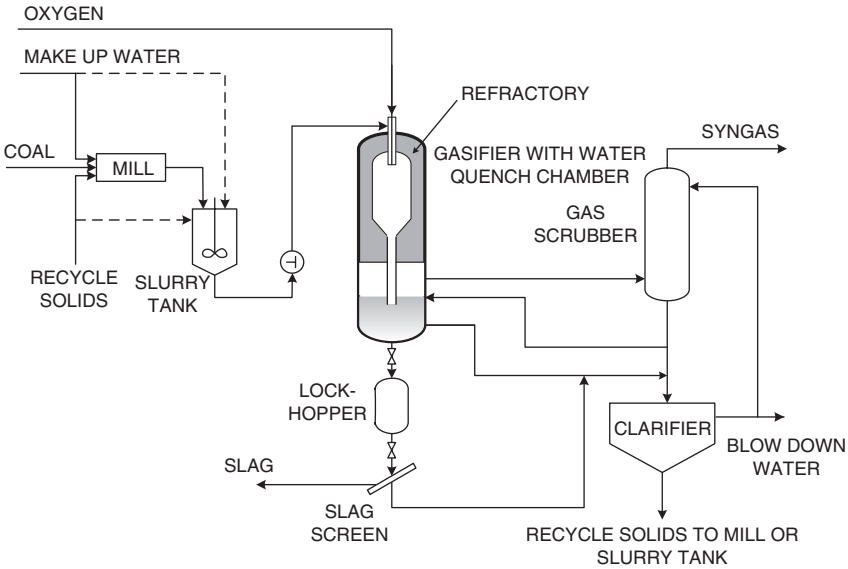

Figure 5.23 GEE Quench gasifier (reproduced with permission from ChevronTexaco).

IGCC applications, where no gas expander is included in the scheme. For chemical applications, it may be as much as 70–80 bar. The slurry feed is introduced into the reactor with the oxidant (usually oxygen) through the feed-injector (burner), which is located centrally on the top of the gasifier. The gasification takes place at slagging temperatures, typically about 1425°C depending on the ash quality of the feed (Figure 5.23).

In the quench configuration, the hot syngas leaves the reactor at the bottom together with the liquid slag and enters the quench chamber. GEE's quench system provides a total quench, so that the gas leaves the quench chamber fully water-saturated at a temperature of between 200 and 300°C. For chemical applications, such as hydrogen or ammonia manufacture, these are suitable conditions for direct CO shift conversion. Particulates and hydrogen chloride are removed from the gas in a hot scrubber before it enters the catalyst bed.

The ash solidifies to a slag in the quench vessel and leaves it via a lock-hopper. The water leaving the lock-hopper is separated from the slag and recycled for slurry preparation.

The radiant cooler configuration (Figure 5.24), which was used in the Cool Water and Polk IGCC plants, makes full use of the potential for heat recovery for maximum efficiency. The feed preparation and gasifier are identical to the quench configuration.

The hot syngas leaves the gasifier at the bottom and enters the radiant cooler where it is cooled to about 760°C. The molten slag falls to the quench bath at the bottom of the cooler, where it solidifies. As with the quench configuration, the slag

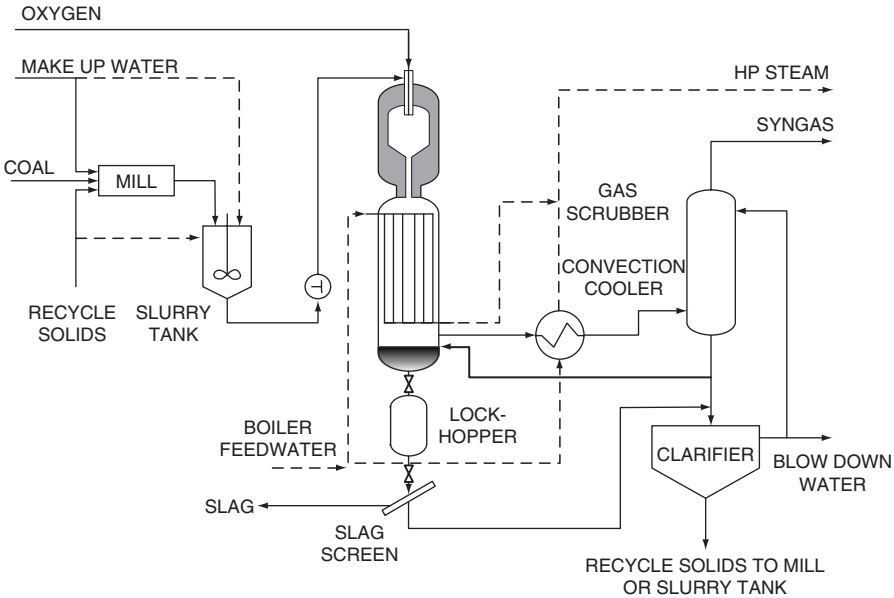

Figure 5.24 GEE radiant + convective cooler configuration (reproduced with permission from ChevronTexaco).

is removed through a lock-hopper arrangement. In the pure radiant cooling concept, the gas leaving the radiant cooler is then cooled further in a horizontal fire-tube convection cooler to a temperature of about 425°C. Both coolers are used to raise high-pressure steam. In the Polk plant, the steam pressure is 115 bar. In the radiant-quench design, the gas flows from the radiant cooler into the quench.

As in the quench configuration, there is a final hot gas scrubber to remove hydrogen chloride and particulates.

Equipment issues

The GEE quench gasifier is definitely the most inexpensive design on the market. On the other hand, it is maintenance-intensive. In particular regular refractory repairs are necessary. To achieve greater than 97% availability quoted by Eastman (Moock and Trapp, 2002), it is necessary to have an installed standby reactor, which negates the low capital expenditure to a large extent. Whether a spare is required will always be made on a project-specific basis, however.

5.3.6 The E-Gas process

The E-Gas process utilizes a two-stage gasifier with a coal-slurry feed, and is currently (early 2007) the only two-stage process with an operating commercial-scale demonstration plant.

The E-Gas process was developed by Dow, which started in 1978 with a 12 t/d pilot plant operating in Plaquemine, Louisiana. This was followed by a 550 t/d demonstration plant (in 1983) and a 1600 t/d 165 MW IGCC production facility (1987), both at the same site. Based on these results, a 2500 t/d coal (2100 t/d petcoke) commercial unit was built at the Wabash River site in Terra Haute, Indiana, as part of a repowering project. The Wabash River unit began operations in 1966. The unit is equipped with a spare gasifier, and the reactor has an insulated brick lining similar to GEE gasifiers. The overall efficiency is about 40% HHV.

The process is now owned and marketed by ConocoPhillips. Important current projects include the 630 MW_e Excelsior power plant in Minnesota, and a similar unit in Washington state.

Process description

The E-Gas gasifier is a two-stage coal-water slurry feed entrained-flow slagging gasifier. It was originally designed for the gasification of sub-bituminous coal, although more recently high-sulfur (up to 5.9 wt% on a dry basis) Midwestern bituminous coal and petroleum coke have been used. The combination of a coal-water slurry and a

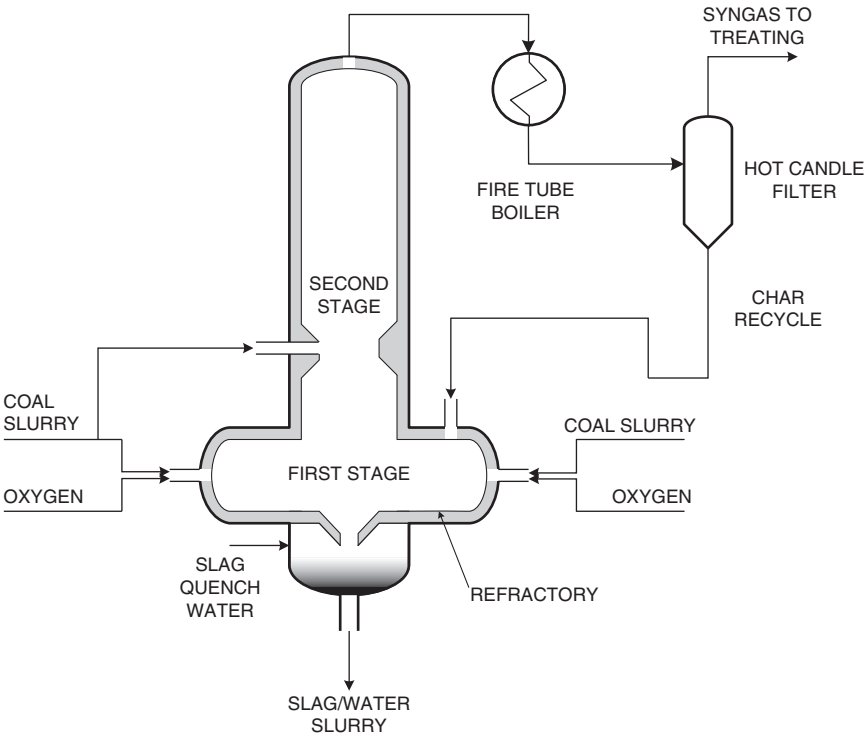

Figure 5.25 The E-Gas gasifier.

low-rank coal in a single-stage gasifier would result in low efficiency and high oxygen consumption. By adding a second non-slagging stage, this problem has been partially mitigated. In their process scheme (see Figure 5.25), the sub-bituminous coal-water slurry is injected into the hot gases leaving the first slagging stage, resulting in a much cooler exit gas, which contains some char. This mixture, with a temperature of about 1040°C, passes through a fire-tube syngas cooler, after which the char is separated from the gas in a particulate-removal unit featuring metallic candle filters. The char is then injected together with oxygen and/or steam into the first slagging stage, where the temperature is about 1400°C. The advantage of this process is that although a sub-bituminous coal is used and introduced into the gasifier as coal-water slurry, the slagging part of the gasifier sees a feed upgraded by a dry char stream that requires relatively little oxygen to be gasified. The waste heat from this stage is then used in the non-slagging stage to free the feed of all the water, as well as to supply the heat for some pyrolysis reactions.

The slag is quenched in a water bath in the bottom of the slagging reactor. It is then crushed and, via a continuous pressure let down system, brought to atmospheric pressure. The E-Gas process is the only process where no lock-hoppers are used for this purpose.

The process continues to be developed further to improve the efficiency in power applications, in particular by increasing the first stage/second stage slurry split from 90/10 in the original Partial Slurry Quench version to 75/25 in the Full Slurry Quench version (Amick, 2004).

5.3.7 The MHI gasifier

In 2001, the Japanese Central Research Institute of Electric Power Industry (CRIEPI) and a consortium of electric utilities formed the Clean Coal Power R&D Company (CCP), which announced the construction of a commercial scale 250 MW (1700 t/d) IGCC demonstration plant at Nakoso, Japan. Start-up was in September 2007 (Kaneko *et al.*, 2002; Kaneko 2006; Sakamoto, 2007). The CCP gasifier (see Figure 5.26) features a dry feed with two-stage operation, but uses air as the oxidant. The technology was initially developed by CRIEPI and Mitsubishi Heavy Industries (MHI) in a 200 t/d pilot plant, also at Nakoso.

While pressurized dry feed entrained-flow gasifiers can be considered as proven technology (e.g. Shell, Siemens) and the same can be said of two-stage feeding (E-Gas), this is the first attempt to combine these two attractive features in a single gasifier.

Operating the first "combustor" stage in a combustion mode promotes very high temperatures and simplifies separation of the liquid slag from the gas (see Figure 5.26). The oxidant, although stated as being air, is in fact enriched slightly with surplus oxygen from the nitrogen plant, which supplies inert gas for feed transport, etc.

At the second, "reductor", stage only coal is introduced, without any further oxidant. In the endothermic reaction with the gas from the first stage, the coal is devolatilized and tars are cracked sufficiently that no problems occur in the downstream convective cooler. Most of the char is also gasified. Remaining char is separated

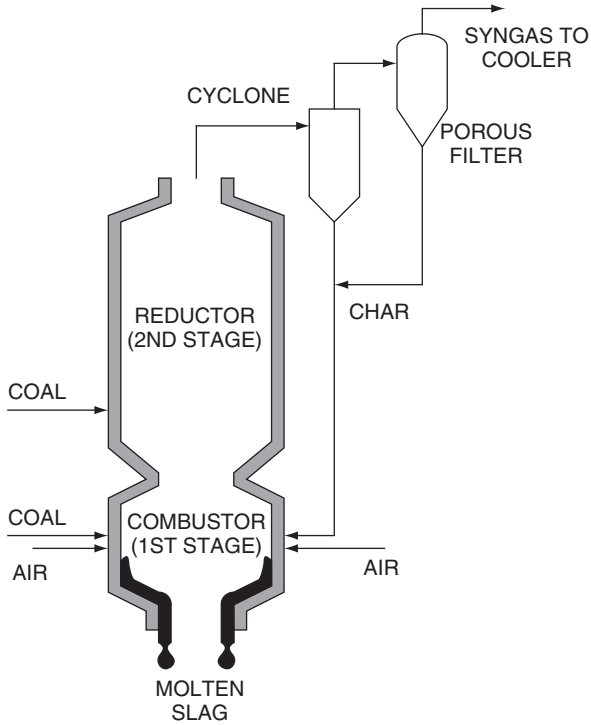

Figure 5.26 The MHI gasifier (source: Kaneko *et al.*, 2002).

from the gas in a cyclone and candle filter for recycle to the first stage. The temperature drop over the reductor stage is 700°C with a reactor outlet temperature of around 1000°C.

Carbon conversion rates of 99.8% and more have been achieved regularly with a variety of coals.

5.3.8 The EAGLE gasifier

The EAGLE gasifier (Figure 5.27) is an oxygen-blown two-stage dry feed reactor currently under development by the Electric Power Development Company in Japan. A 150 t/d pilot plant has been built, and commenced trials in March 2002 (Tajima and Tsunoda, 2002).

The first stage operates in an oxygen rich mode at temperatures of around 1600°C (see Figure 5.27). The outlet temperature from the second stage, which operates oxygen lean with coal and recycled char, is of the order of 1150°C. The reactor uses tangential firing to promote a longer residence time for the coal particles.

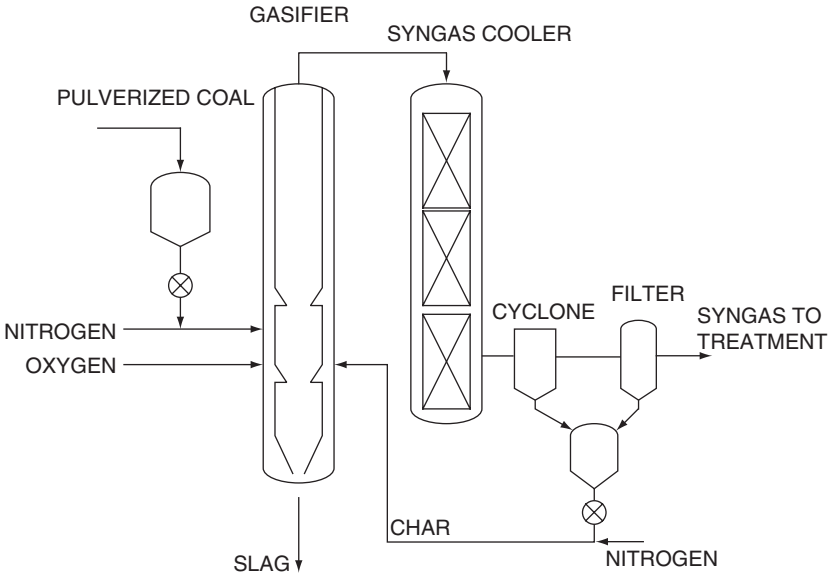

Figure 5.27 The EAGLE gasifier (adapted from Tajima and Tsunoda, 2002).

Coal is supplied in about equal quantities to the two stages, and the reactor is controlled by adjusting the oxygen rates.

5.3.9 ICCT OMB process

The Institute of Clean Coal Technology (ICCT) at the East China University of Science and Technology in Shanghai began work on developing its own gasification process in 1995. The initial designs were based on a coal-water slurry feed using opposed multiple burners (OMB) in a refractory lined vessel (Figure 5.28). A 22 t/d pilot plant was operated successfully in 2000. A first 750 t/d commercial-scale gasifier operating at 65 bar went on stream at Dezhou in late 2004. Two further units of 1150 t/d were started up in the Yankuang plant near Lunan in 2005. A carbon conversion rate of over 98% is reported for both these plants. ICCT is working on modified designs using dry feed (with N_2 and CO_2 as carrier gas), as well as a water-cooled membrane wall reactor design (Yu *et al.*, 2005; Zhou *et al.*, 2006). A further seven plants have been licensed in 2007 (Yu *et al.*, 2007).

The slurry preparation and feed is conventional, using a horizontal ball mill and membrane piston pump. The unique feature of the OMB reactor is the use of four side-mounted burners in a down-flow reactor, to which the high carbon conversion is attributed. The reactor is a quench design with special internals to reduce water carry over. The slag collects in the water bath of the quench and is discharged via a lock-hopper (see Figure 5.28). The gas leaves the quench water saturated at a temperature of about

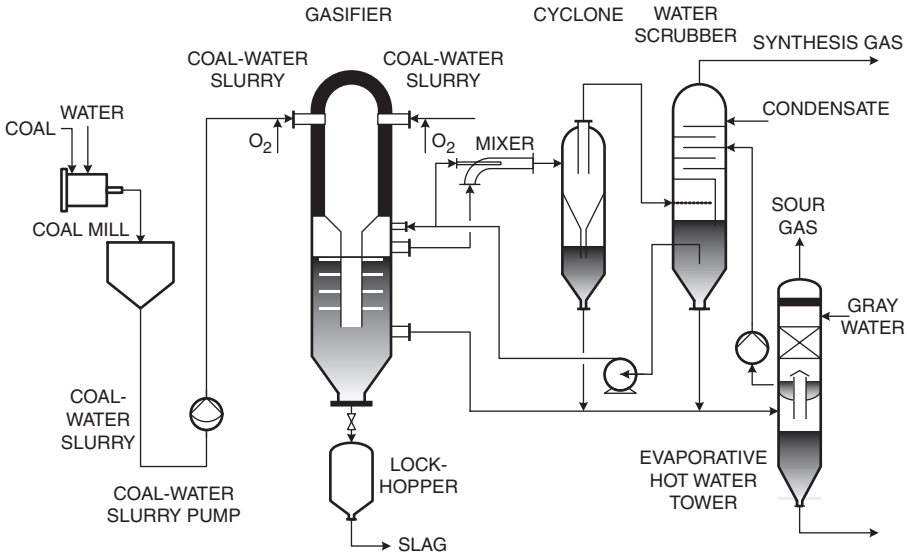

Figure 5.28 The ICCT Opposed Multiple Burner basifier (adapted from Zhou *et al.*, 2006).

220–250°C, depending on operating pressure. Final particulate removal is achieved with a jet mixer, a cyclone and a water scrubber.

5.3.10 The Pratt & Whitney Rocketdyne (PWR) gasifier

Pratt & Whitney Rocketdyne is using its experience in rocket engine design to develop a gasifier that is aimed at reducing costs and increasing availability in gasification technology. The dry feed process uses an extrusion pump to move the pulverized coal to a pressurized charge vessel. The dense phase flow of pulverized coal from the charge bin is distributed by splitters to nozzles located over the whole face of the burner (Figure 5.29). In this manner an almost ideal plug flow is obtained in a very small, narrow reactor, producing rocket-engine like flat-flame temperatures of 3200°C near the injector face for rapid kinetics. The reactor itself has a cooled wall (Hartung and Darby, 2006; Sprouse *et al.*, 2006, 2007).

The small size of the reactor is expected to improve efficiencies compared with other dry feed gasifiers, by reducing the heat loss to the cooled wall. It is also expected to contribute to a reduced mean-times-to-repair, which will improve availability. The lifetimes for the burner and cooled wall are expected to be similar to that of existing commercial dry feed gasifiers.

Component development has been in progress since 1976. A pilot plant gasifier and test facility at GTI's FlexFuel facility is scheduled to start operation in 2007 (Darby, 2005).

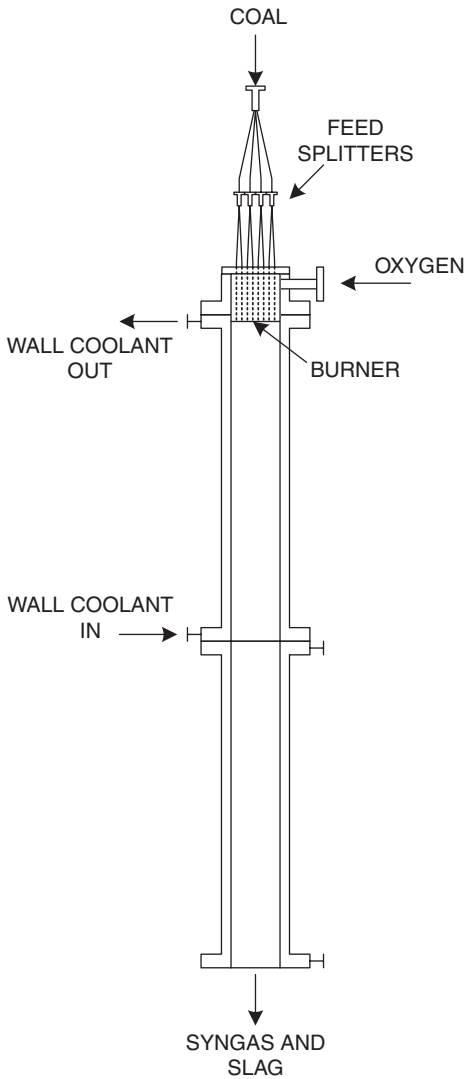

Figure 5.29 PWR compact gasifier (source: Hartung and Darby, 2006).

5.4 OIL GASIFICATION AND PARTIAL OXIDATION OF NATURAL GAS

Technologies for the gasification of liquid and gaseous feeds were developed at the end of the 1940s by Texaco, and in the early 1950s by Shell. These two technologies have dominated this segment of the market since that time. In recent years Lurgi has begun marketing a third technology, known as Multi-Purpose Gasification

(MPG), which was originally developed out of its coal gasification process, specifically to handle the tars produced there. Montecatini and GIAP also developed technologies, but neither achieved commercial success.

Certain key features of all three processes are similar. All use entrained-flow reactors. The burners are top mounted in the down-flow, refractory lined reactor vessels. Operation temperatures are similar (in the range 1250–1450°C). When operating on liquid feed, all three processes produce a small amount of residual carbon, which is necessary to sequester the ash from the reactor.

The important differences between the processes are in the details of burner design, in the method of syngas cooling, and in soot handling.

Oil gasification continues to play an important role in developing bottom-of-the-barrel strategies for oil refineries, and a number are in planning or under construction around the world. The Canadian oil sands projects are also a developing market for oil gasification. The first project (Opti Canada) will be coming on stream early in 2008. Others are in various states of planning and construction. All three of the technologies described are involved in such projects.

Partial oxidation of gaseous feeds

Processes suitable for the gasification of liquid feeds can be used with very little modification for the partial oxidation of natural gas or other gaseous feedstocks. Typical differences include the design of the feed preheat train and the burner. The main process difference is that very little carbon is formed (a few hundred ppm mass instead of values of about 0.5–1%mass) and that the carbon is free of metals, both of which simplify the soot capture and management substantially. And, of course, the gas quality is different, reflecting the C/H ratio of the feed. In the case of sulfur-free feeds, it may also be necessary to review special corrosion issues, such as metal dusting.

For this reason, no specific, detailed description of gaseous feed processes is made. Where differences to oil gasification, such as those described above, are worthy of note, these are discussed as part of the relevant oil gasification technology.

5.4.1 The GEE gasification process

The original Texaco gasification process was developed in the late 1940s. Early research efforts focused on producing syngas from natural gas to produce liquid hydrocarbons via Fischer-Tropsch technology. The first commercial-scale plant based on natural gas as a feedstock was commissioned in 1950 for the production of ammonia. The first commercial-scale use of oil feedstocks occurred in 1956, and early coal work began at about the same time. In the 1970s, research efforts were focused onto coal gasification (Weissman and Thone, 1995).

During the succeeding 50 or more years, over 100 reactors have been licensed for oil or gas service to produce nearly 100 million Nm^3/d syngas. One typical reference

plant was commissioned in a German chemical plant in the 1960s, and with two further expansions it still operates today with a modified product slate for the synthesis gas. Another has been producing 70,000 Nm³/h hydrogen for refinery purposes since the mid-1980s.

Commercial plants have been built at pressures up to 80 bar, and experience with unit reactor sizes up to 3.5 million Nm³/d synthesis gas is available from the ISAB installation in Sicily.

Process description

The oil feedstock is mixed with the moderating steam and preheated in a fired heater. The original Texaco burner (Figure 5.30) is of water-cooled design, in which steam and oil are fed together through an annular slit surrounding the central oxygen pipe. The process steam is used to atomize the oil, and mixing is ensured by imparting counter-rotating vortex motion to the two streams (Pelofsky, 1977; Brejc, 1989).

The reactor itself is an empty, refractory lined vessel. The soot make is 1–2 wt% based on feed flow (Appl, 1999).

Syngas cooling

GEE offers two different syngas cooling options, one by direct quenching with water and the other by using a syngas cooler to generate steam (see Figure 5.31).

In the quench mode, the hot, raw syngas leaves the bottom of the reactor via a dip-tube into the quench section. The quenched syngas is saturated with water, and leaves the quench section with a temperature of about 250°C. At an operating pressure of, say, 80 bar, this corresponds to a water loading in the gas of about 2 kg H_2O per Nm³ of gas. This high water loading makes the quenched gas suitable for CO

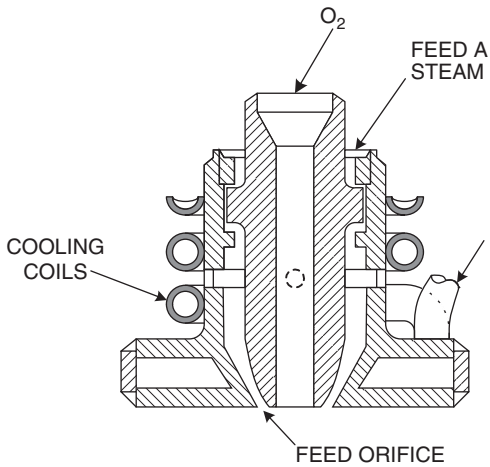

Figure 5.30 Texaco oil burner (reproduced with permission from ChevronTexaco).

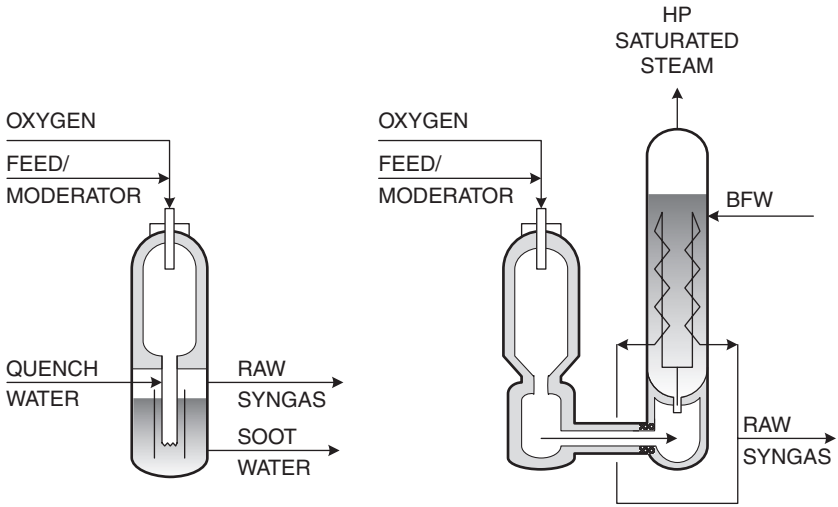

Figure 5.31 GEE reactors with quench cooling and syngas cooler (reproduced with permission from ChevronTexaco).

shift conversion without further steam addition. The quench mode of syngas cooling is, therefore, GEE's preferred mode for hydrogen and ammonia manufacture.

The quench removes the bulk of the solids in the gas, and these are extracted from the quench vessel as a soot-water slurry or "black water".

GEE usually uses the syngas cooler mode in applications where a high CO content is required (e.g. oxo synthesis gas), where the high steam loading of a quenched gas is of no advantage. For intermediate requirements in the H_2/CO ratio, such as methanol synthesis gas, a combination of quench and waste-heat boiler cooling is possible (Jungfer, 1985).

Carbon removal

Following the flowsheet in Figure 5.32, which shows the quench configuration, the gas leaves the quench vessel and is then scrubbed with water twice – first in a venturi scrubber and then in a packed column – to remove final traces of soot. The raw gas is then suitable for subsequent treatment in downstream units, such as CO shift and acid gas removal.

Carbon management

In the GEE process, soot is extracted from the carbon–water mixture with naphtha and recycled with the feedstock to the reactor, where it is gasified to extinction. The black water from the quench and the scrubbing section is cooled and contacted with the naphtha in the decanter. In this vessel the naphtha extracts the soot from the water, leaving much (but not all) of the ash present in the water phase (gray water).

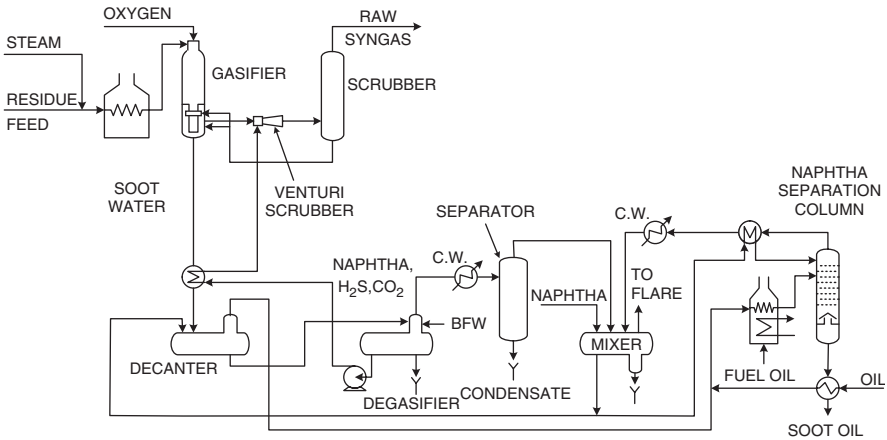

Figure 5.32 Typical GEE oil gasification flow scheme (reproduced with permission from ChevronTexaco).

The soot–naphtha mixture is drawn from the top of the decanter and mixed with fresh feed oil. The naphtha is recovered in a distillation tower and recycled to the decanter, leaving the soot–oil mixture as a bottoms product for feeding to the gasifier. Traces of naphtha remain in the tower bottoms and are gasified as well. This naphtha slip has to be made up with fresh naphtha to the system.

The gray water is degassed to recover naphtha, and recycled for use in the quench and scrubbing sections. When operating in quench mode, the overall water balance is negative because of the large amount carried out with the syngas. Nonetheless, a bleed stream of gray water is bled from the circuit to remove ash. This is necessary to limit the build-up of ash in the circuit. This is by no means trivial, and a soot oil gasifier feed metals content of about ten times that of the fresh feedstock has been reported. A device was developed that reduced this build-up factor to about 2.5 (Czytko *et al.*, 1983).

When operating in the syngas cooler mode there is little water in the raw syngas, so that the bleed stream is necessary in any case to maintain the water balance.

Many of the newer plants now use filtration on the black water and dispose of the filter cake to landfill or other destinations.

Equipment performance

The equipment for the process has proved reliable in service, and in a study on operation and maintenance aspects of the process, the data in Table 5.11 have been published.

Process performance

Typical process performance for different feedstocks is shown in Table 5.12.

Table 5.11
Maintenance intervals for GEE oil gasifier

Component	Frequency	Time required for intervention
Burner	Every 6 months	6–10 h
Quench ring	Every 2 years	156–180 h
Refractory	Every 3 years	680–760 h

Source: Bressan and Curcio, 1997.

Table 5.12
Performance data for the GEE oil gasification process

Feedstock type		Natural gas	Naphtha	Heavy fuel oil	Tar (from bituminous coal)
Feedstock composition					
C	wt%	73.4	83.8	87.2	88.1
H	wt%	22.8	16.2	9.9	5.7
O	wt%	0.8		0.8	4.4
N	wt%	3.0		0.7	0.9
S	wt%			1.4	0.8
Ash	wt%				0.1
Raw gas composition					
Product gas (25 bar, quench):					
Carbon dioxide		2.6	2.7	5.7	5.7
Carbon monoxide		35.0	45.3	47.5	54.3
Hydrogen		61.1	51.2	45.8	38.9
Methane		0.3	0.7	0.5	0.1
Nitrogen + argon		1.0	0.1	0.3	0.8
Hydrogen sulfide				0.3	0.2
Soot	kg/1000 Nm^3		1.8	10.0	6.1
Consumption figures per 1000 Nm^3 CO + H_2					
Feedstock	kg	262	297	323	356
Oxygen	Nm^3	248	239	240	243
Steam	kg		74	148	186

Reproduced with permission from ChevronTexaco.

5.4.2 The Shell Gasification Process (SGP)

The Shell Gasification Process (SGP) was developed in Shell's research center in Amsterdam during the early 1950s, primarily as a means of manufacturing synthesis gas from fuel oil. The first gasifier, using heavy fuel oil as feedstock, was brought on stream in 1956.

Some 140–150 units have been installed worldwide, with a processing capacity of some 7 million t/y of residue. One typical reference plant processes about 240,000 t/y of residues of varying quality, which are bought on the open market, for the production of ammonia. Another, which was started up in 1972, produces a mixed product slate of ammonia, methanol and hydrogen, and is fed with about 350,000 t/y residue directly out of a visbreaker. An interesting reference includes a reduction gas plant for nickel furnaces, one of the few air-blown units in commercial operation. Operating capability covers pressures up to about 65 bar and unit reactor sizes up to 1.8 million Nm^3/d/ syngas capacity.

Process description

The non-catalytic partial oxidation of hydrocarbons by the Shell gasification process (Figure 5.34) takes place in a refractory-lined reactor (Figure 5.33) that is fitted with a specially designed burner. The oxidant is preheated and mixed with steam prior to being fed to the burner. The burner and reactor geometry are so designed that this mixture of oxidant and steam is intimately mixed with the preheated feedstock. Originally a pressure atomizing burner was used, but during the mid-1980s an improved co-annular design using blast atomizing was developed. This burner is capable of handling residues of up to 300 cSt at the burner (Weigner *et al.*, 2002).

Waste heat recovery

The product of the partial oxidation reaction is a raw synthesis gas at a temperature of about 1300°C that contains particles of residual carbon and ash. The recovery of the sensible heat in this gas is an integral feature of the SGP process.

Primary heat recovery takes place in a syngas cooler generating high-pressure (up to 120 bar) steam in which the reactor effluent is cooled to about 340°C. The syngas cooler is of a Shell proprietary design, discussed in more detail in section 6.6.

Secondary heat recovery takes place in a boiler feedwater economizer immediately downstream of the waste heat exchanger.

Carbon removal

The partial oxidation reactor outlet gas contains a small amount of free carbon. The carbon particles are removed from the gas together with the ash in a two-stage water wash. The carbon formed in the partial oxidation reactor is removed from the

Figure 5.33 Shell reactor and syngas cooler (source: de Graaf *et al.*, 2000; reproduced with permission from Shell).

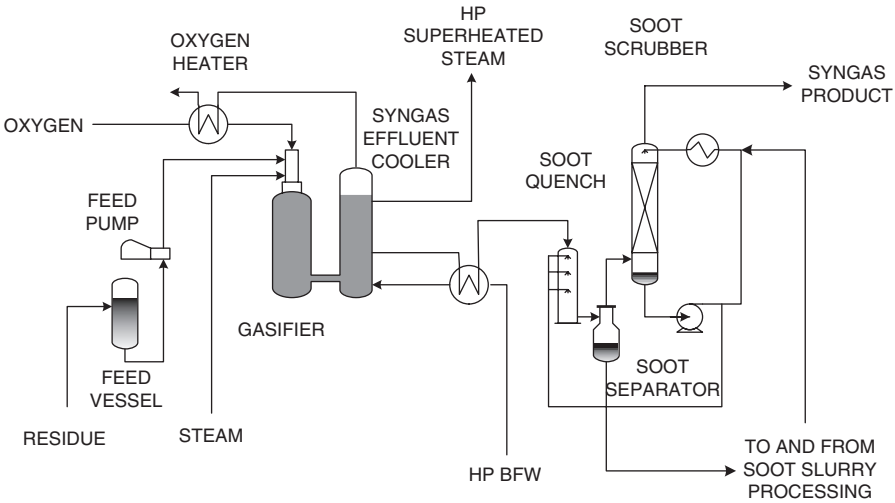

Figure 5.34 Residual oil-based SGP unit (source: de Graaf and Magri, 2002; reproduced with permission from Shell).

system as a carbon slurry, together with the ash and the process condensate. This slurry is subsequently processed in the ash-removal unit described below. The product syngas leaves the scrubber with a temperature of about 40°C and is essentially free of carbon. It is then suitable for treatment with any commercial desulfurization solvent.

Carbon management

Over the course of its development, SGP has gone through three distinct stages in its approach to management of the carbon produced in the gasification section.

The early plants were equipped with the *Shell Pelletizing System*, an extraction process using fuel oil as the extraction medium. The fuel oil was contacted with the carbon slurry in the pelletizer where carbon pellets of about 5–8 mm were formed, leaving a clear water phase. These pellets were separated from the water on a vibrating screen. The pellets could be burned directly or mixed in with fuel oil to make a liquid fuel known as carbon oil. The carbon oil could in part be used as feedstock for the gasifier, thus providing partial recycling of the carbon. This process had the advantage of being cheap and simple to operate. However, in the extraction process with fuel oil, the separation of soot from the heavy metals (vanadium and nickel) from the gasifier feedstock was poor so that any attempt at 100% carbon recycle brought an unacceptable build-up of metals in the system. Furthermore, there was some water slip with the pellets into the carbon oil, so the carbon–oil mixing

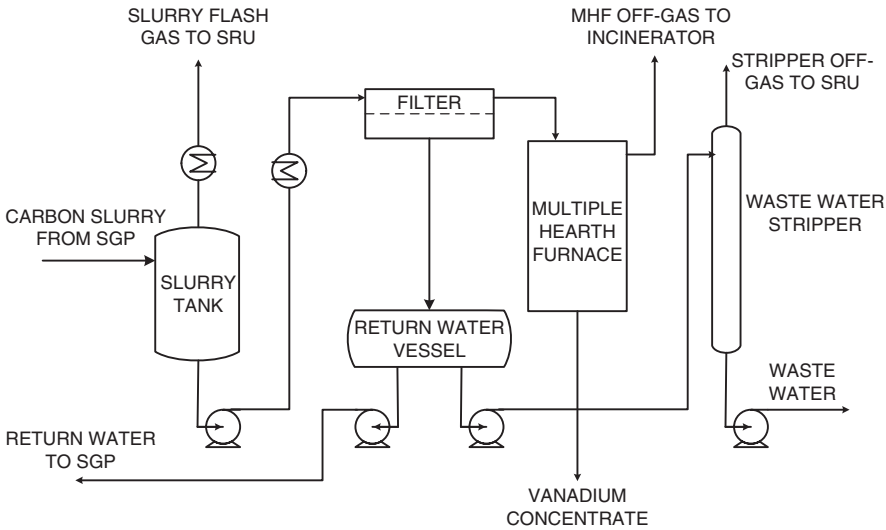

Figure 5.35 Shell soot-ash removal unit. (SARU) (source: Higman and Heurich, 1993)

process could not be operated above 100°C without causing foaming. This limitation meant that this process became unusable with the increasingly heavier feedstock appearing on the market.

The next development was therefore to substitute the fuel oil with naphtha as the extraction medium. This development was known as the *Naphtha Soot Carbon Recovery* process. The principle of extraction in a mixer to increase the size of the agglomerates as well as mechanical sieving was maintained so as to achieve a low naphtha/slurry ratio. The equipment is, however, now operated under pressure. The naphtha–soot pellets are mixed with the main feedstock at whatever temperature is required to achieve the desired viscosity. The naphtha is then distilled off from the feed and recycled to the extraction stage, leaving the soot behind in the feed (Brejc, 1989). The use of naphtha as an intermediate allows the use of heavier, more viscous feedstocks than in the case of pelletizing with fuel oil. Also, an improvement in the separation between carbon and ash allows 100% carbon recycling. Nonetheless, an ash build-up factor of about 3:1 can be observed under 100% recycle conditions. These improvements are bought, however, at a cost in investment and operating expense. Furthermore, the ash build-up still places a limit on ash content in the feedstock.

The third generation of soot management now employed by Shell is based on filtration of the carbon slurry and subsequent handling of the soot-ash filter cake, and goes under the name of *Soot-Ash Removal Unit* (SARU; Figure 5.35). The carbon slurry leaves the SGP under pressure at a temperature of some 125°C, and is

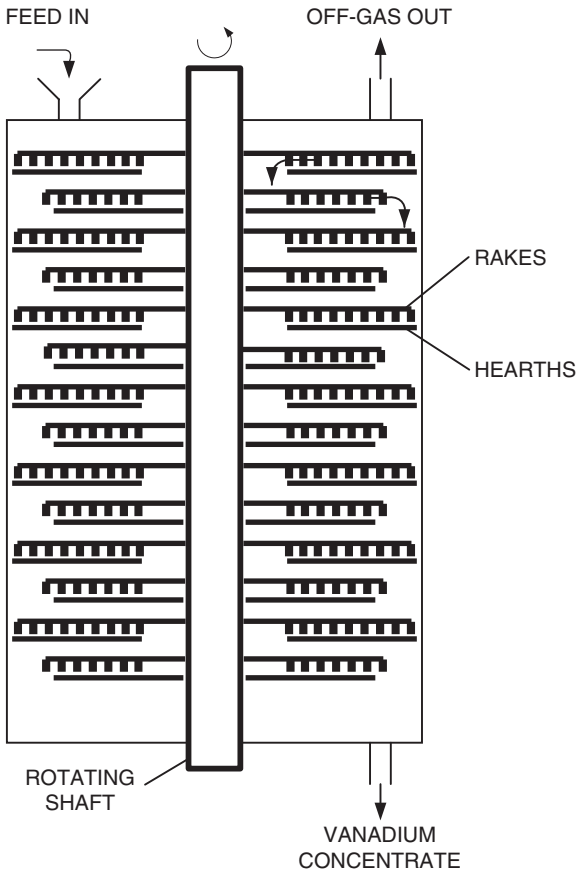

Figure 5.36 Multiple hearth furnace.

flashed into an intermediate slurry storage tank at atmospheric pressure. Then it is cooled before water and filtrate are separated in a membrane filter press. The clear filtrate is mostly recycled to the SGP scrubber as wash water. The overall water balance produces a surplus, however, which is treated in a sour water stripper to remove dissolved gases such as H_2S, HCN and ammonia before being sent to a biotreater.

The filter cake contains typically about 75–85% moisture, but nonetheless behaves for most purposes as a solid. It is then subjected to thermal treatment in a multiple hearth furnace (Figure 5.36). The carbon is burnt off under conditions that prevent the formation of liquid vanadium pentoxide, which has a melting point at about 700°C (Samant *et al*., 1991; Tils, 1994). In this type of furnace, which is used extensively in the vanadium industry, the filter cake is fed from the top of the furnace counter-current to the combustion air/flue gas. Rakes, mounted to the central

Table 5.13
Typical SGP equipment lifetimes

Burners (co-annular type)	
• Inspection intervals	~4000 h
• Repair intervals	8,000–12,000 h
Refractory	
• dome repairs	~16,000 h
• wall	20,000–40,000 h
Waste heat boiler	
• coil inlet section	~60,000 h
Thermocouples	
• replacement intervals	2500–8000 h

air-cooled shaft, rotate slowly, drawing the solid material to downcomers, which are located on alternative hearths at the center and the periphery of the furnace. In the upper hearths, the rising flue gas dries the filter cake. In the lower hearths, the filter cake is gently burnt off. The bottom product has less than 2 wt% carbon and, depending on the metals in the SGP feedstock, can contain typically 75% V_2O_5. The soot combustion is under the prevailing conditions not quite complete, so that the off-gas contains not only the water vapor from the moisture in the filter cake, but also carbon monoxide. In addition, it contains traces of H_2S contained within the filter cake. This off-gas is incinerated thermally or catalytically either as part of the SARU facility or centrally depending on the site infrastructure.

Equipment performance

SGP is a reliable process which has been proved in many applications worldwide. This reliability is based on the use of proven equipment in critical duties. Typical lifetimes are listed in Table 5.13 (Higman, 1994).

SGP employs a sophisticated automatic start-up and shutdown system. Since Butzert's description of the main characteristics (Butzert, 1976), further developments include, for example, automated reactor heat-up and a system for minimizing flaring of sulfur-containing gases during start-up.

Process performance

Table 5.14 provides some information on typical process performance with different feedstocks.

Table 5.14
SGP process performance with different feedstocks

Feedstock type		Natural gas	Heavy fuel oil	Vacuum flash cracked residue
Feedstock properties				
Specific gravity (15/4)			0.99	1.10
C/H ratio (wt)		3.17	7.90	9.50
Sulfur	wt%		3.50	4.50
Ash	wt%		0.10	0.15
Feedstock preheat	°C	400	290	290
Oxygen (99.5%, 260°C)	t	1154	1103	954
Process steam (80°C)	t	–	350	350
Naphtha	t	–	4	4
Product gas (40°C, 56 bar, dry)				
Carbon Dioxide		1.71	2.75	2.30
Carbon Monoxide		34.89	49.52	52.27
Hydrogen		61.40	46.40	43.80
Methane		1.00	0.30	0.30
Nitrogen + Argon		1.00	0.23	0.25
Hydrogen sulfide		–	0.77	1.04
Carbonyl sulfide		–	0.03	0.04
Quantity	tmol	158	134	128
H_2/CO ratio		1.76	0.95	0.84
Product steam (92 bar sat'd), (gross)	t	2182	2358	2283

Note: The above data for heavy fuel oil and vacuum flash cracked residue are based on the use of naphtha soot carbon recovery. When using SARU, minor changes will be observed. Quantities are based on 1000 t feed.

5.4.3 Lurgi's Multi-Purpose Gasification process (MPG)

Lurgi has maintained a leading position in coal gasification since the 1930s, but for partial oxidation of liquids and gases worked for many years as contractor and licensing agent for the Shell SGP process. In 1998 Lurgi announced it would now be marketing its own technology under the name of LurgiSVZ multi-purpose gasification (MPG) (Figures 5.37, 5.38). This technology had been in existence at what is today SVZ Schwarze Pumpe since 1969 (Hirschfelder *et al.*, 1997). It was developed originally out of a Lurgi moving-bed gasifier to process tars produced in the other 23 Lurgi gasifiers at the location, which produced town gas from lignite.

Recently the start-up after the revamp of an existing 60 bar 16 t/h asphalt feed reactor has been reported (Erdmann *et al.*, 2002). Another unit, to be built near Edmonton as part of an oil sands operation, is in engineering.

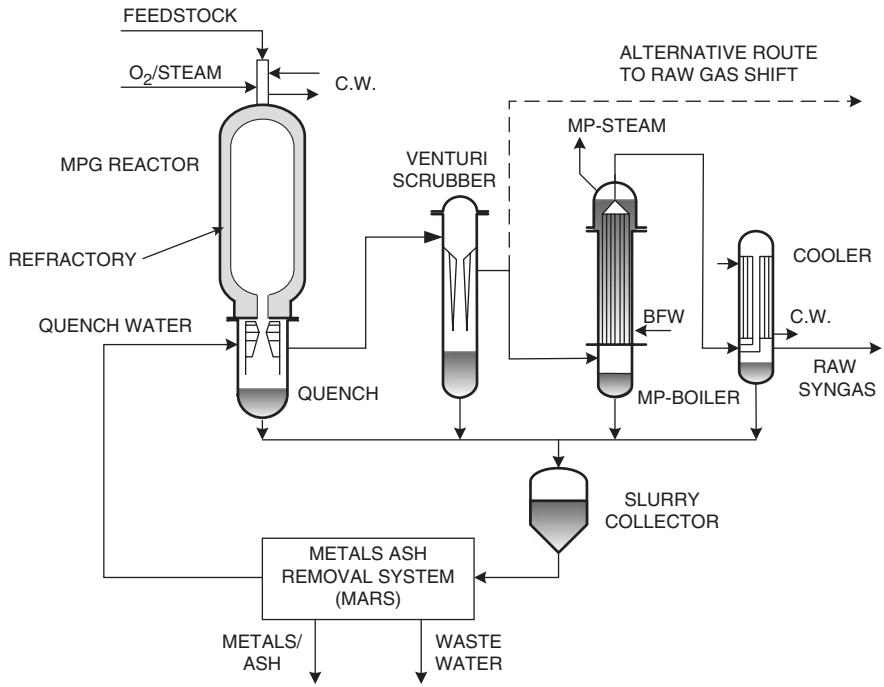

Figure 5.37 Lurgi MPG process (quench configuration) (source: Liebner, 1998).

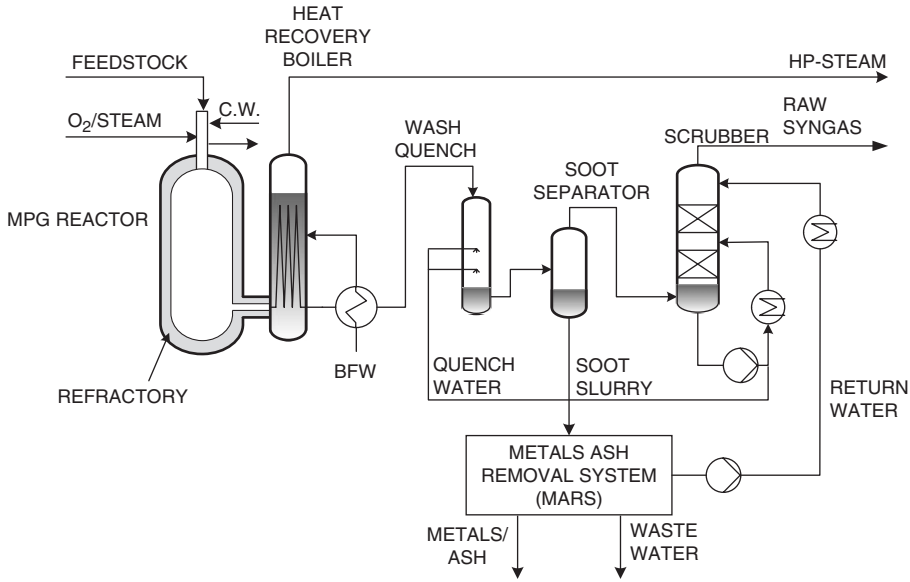

Figure 5.38 Lurgi MPG process (syngas cooler configuration) (source: Liebner, 1998).

Process description

The gasification reactor is a refractory lined vessel with top-mounted burner. The burner has a multiple-nozzle design (Appl, 1999) that allows it to accept separate feed streams of otherwise incompatible materials.

Waste heat recovery

MPG is offered with two alternative syngas cooling configurations; quench and heat recovery. The criteria for selection of the cooling configuration are listed in Table 5.15.

Carbon management

The carbon is washed out of the gas with a conventional water wash. Lurgi's carbon management process for MPG, the Metals Ash Removal System (MARS), is a filtration-multiple hearth furnace process. The flow sheet is very similar to that of Shell's SARU described in section 5.4.2. Differences are a matter of detail in equipment design and selection. Lurgi uses its own proprietary design of multiple hearth furnace, which already had a long track record in the vanadium industry before

Table 5.15
Selection criteria for quench vs heat recovery configuration

	Quench configuration	Heat recovery configuration
Feedstocks: gas, residue, wastes (sludges, coal, coke); extreme ash and/or salt contents	Highest flexibility	Limited by possible salt precipitation
Product range: Syngas (H_2 + CO, H_2, CO)	Fastest (cheapest) route to H_2	Syngas at high temperature H_2–CO equilibrium
Energy utilization	MP steam available; trade off efficiency vs cost	HP-steam, heat recovery at highest temperature; highest efficiency for IGCC possible
Investment cost	Lowest cost for gasification unit	Boiler (i.e. a high efficiency) at extra cost

Source: Liebner, 1998.

Table 5.16
MPG feedstock flexibility (liquids and slurries)

		Actual operating ranges and max. concentrations	
Component		**"Normal" feeds**	**Waste feeds**
C	wt%	65–90	90
H	wt%	9–14	14
S	wt%	6	6
Cl	wt%	2	8
LHV	MJ/kg	35–42	5–330
Toluene insolubles	wt%	6	45
Ash	wt%	3	25
Water	wt%	2	5–100
Trace components (selection only)			
Al	ppmw	600	70,000
Ag	ppmw	5	10
Ba	ppmw	500	2,000
Ca	ppmw	3,000	170,000
Cu	ppmw	200	800
Fe	ppmw	2,000	40,000
Hg	ppmw	10	25
Na	ppmw	1,200	8,000
Ni	ppmw	50	500
Pb	ppmw	200	10,000
V	ppmw	10	100
Zn	ppmw	1,200	10,000
PCBs	ppmw	200	600
PAK	ppmw	20,000	40,000

Source: Liebner, 1998.

finding application in the field of residue gasification. Lurgi also propagates the use of belt filtration. This has the advantage of being a continuous process with easier operation and maintenance. In order to achieve the same de-watering performance as a filter or membrane filter press, flocculants are required.

Process performance

A particular feature of MPG is its multi-nozzle burner, allowing a wide range of feedstocks. Table 5.16 lists operational ranges and maximum concentrations of base components and contaminants as experienced with MPG.

Typical product gas quality is shown in Table 5.17.

Table 5.17
MPG product gases (IGCC application)

		Quench mode (coal oil)	Heat recovery mode (heavy residue)	
		Raw gas	Raw gas	Clean gas after desulfurization
CO_2	mol%	4.00	3.24	3.26
CO	mol%	53.03	58.25	48.63
H_2	mol%	40.80	46.02	46.39
CH_4	mol%	0.15	0.20	0.20
N_2	mol%	0.85	0.65	0.66
Ar	mol%	1.15	0.85	0.86
H_2S	mol%	0.02	0.79	≤ 10 ppmv
Total	mol%	100.00	100.00	100.00
HHV	MJ/Nm³	11.96	12.24	12.13
LHV	MJ/Nm³	11.15	11.31	11.22

Note: Gasification with oxygen (95%v) at about 30 bar (source: Liebner, 1998).

5.4.4 New developments

Despite various improvements over the years, it is generally recognized that handling of the soot produced by partial oxidation of heavy residues places a considerable financial burden on the overall process. This has caused operating companies and others to investigate alternatives. In the 1970s, one operating company was already using a toluene extraction process to recover the soot as a saleable carbon black. A number of other companies made similar attempts, but the economics of these processes, together with the variable product quality depending on gasifier feed quality, have prevented commercialization beyond single demonstration plants. Nonetheless, two processes, both based on filtration of soot slurry and subsequent treatment of the filter cake, have been reported on in recent years and may form the basis for further development.

Norsk Hydro vanadium recovery process

Norsk Hydro developed its own process for its 65 t/h feed heavy-oil gasification plant in Brunsbüttel. This plant has been in operation now for several years, and has definitely provided operating benefits compared with the original 1975-designed pelletizing plant (Maule and Kohnke, 1999).

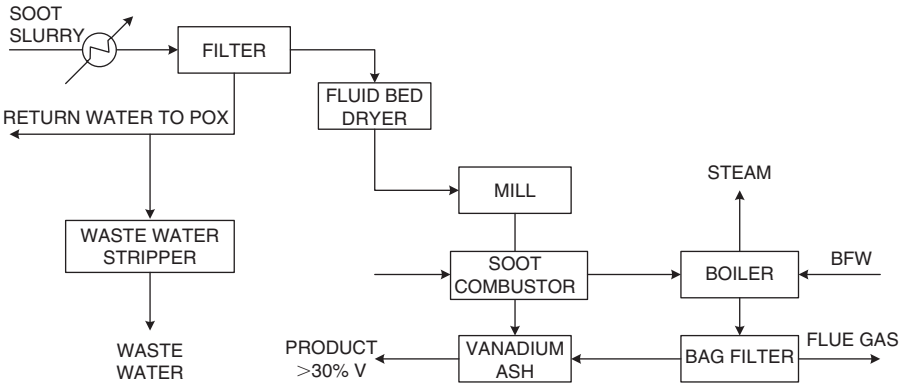

Figure 5.39 Norsk Hydro VR process.

The Norsk Hydro VR (vanadium recovery) process (see Figure 5.39) is based on filtration of soot slurry and combustion of the filter cake. In this process the filter cake is first dried and pulverized before being burned in a special cyclone combustor in which part of the vanadium is combusted to a liquid V_2O_5, which is then scraped from the combustion chamber floor. The heat of combustion is used to generate steam, which in general is sufficient to provide the necessary heat for the drying stage. Fly ash from the combustion stage, which also contains V_2O_5, is collected in a bag filter and combined with that collected from the combustion chamber.

In the published flow diagram, which is more complex than shown in Figure 5.39, there is no specific provision for sulfur recovery from the flue gas. Depending on circumstances, this may have to be included. A fuller description of the process is available in the literature.

In the meantime Texaco has acquired the rights to this process, and it remains to be seen just what further development the process will experience in the hands of a licensor (now GE Energy).

It is worth noting that Krupp Uhde reported a similar development under the name of CASH (Keller *et al.*, 1997). No commercial application is known, however.

Soot gasification

A totally new approach to handling filter cake is under development at the Engler-Bunte-Institut (EBI) of Universität Karlsruhe (Figure 5.40) (Higman, 2002). The development of the filtration-based processes was driven by the recognition that the behavior of the vanadium in the ash is crucial to the oxidizing treatment of the filter cake. In particular, the MHF concepts operate at low temperature specifically to prevent exceeding the melting temperature of the V_2O_5 formed, which is about 700°C. This low operating temperature, for all its benefits, has the disadvantage of a low reaction rate, and thus high residence times and large equipment.

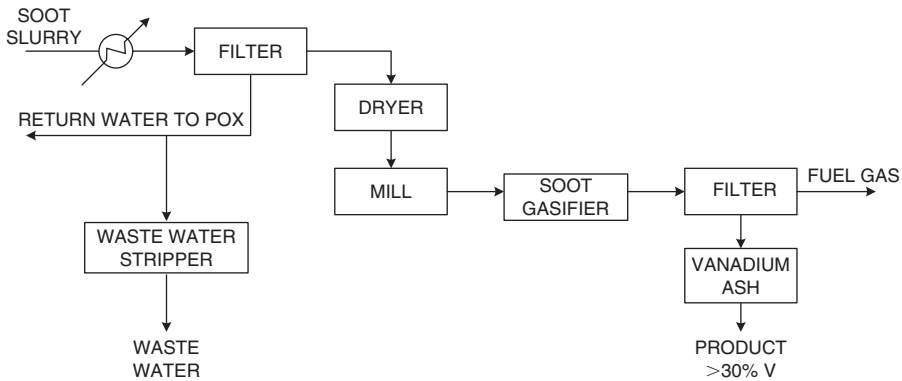

Figure 5.40 EBI soot gasification process.

Soot gasification retains the vanadium in the trioxide state and, as with the main gasifier, can operate at high temperatures without creating liquid vanadium pentoxide. The gasification is optimized to achieve maximum carbon conversion, whereby a higher level of CO_2 is tolerated than in most gasification processes. In other words, minimizing the residual carbon in the ash is more important than $H_2 + CO$ yield. The process exploits the existing gasification infrastructure by using oxygen, and can thus produce a low-pressure synthesis gas with a fuel value. This is in contrast to the large waste gas flow of a multiple hearth furnace, which contains carbon monoxide and requires incineration.

The process line-up includes a typical filtration step followed by fluid-bed drying and milling of the filter cake to <500 μm. Gasification takes place with oxygen and steam in an atmospheric entrained-flow reactor. The ash is removed from the product gas in a dry candle filter and meets the requirements of the metallurgical industry.

This process, which is still under development, has the potential to reduce the costs of carbon management significantly. Further possibilities include the development of a pressurized version that could handle soot filtered dry directly out of the main syngas stream. This would decrease equipment size further, reduce the cost of the wash water circuit, and offer an economic possibility to recycle the fuel gas into the main stream, thus increasing the syngas yield. Clearly developments in the field of oil gasification are by no means at an end.

5.4.5 Process safety

Process automation

Partial oxidation is a process that requires careful control and monitoring so as to ensure that accidental temperature runaways are avoided, especially during transient conditions such as start-up and shutdown. Process licensors have developed

sophisticated control systems, together with integrated automated start-up and shutdown procedures, which play an important role in safe operation.

Butzert described the most important features of such systems in 1976. Each licensor includes details specific to his own process and experience. The fundamentals described by Butzert are still valid today, although the radical change in instrumentation and control hardware since then has allowed the incorporation of many additional functions. For instance, de Graaf and colleagues (1998, 2000) have reported on advanced features of the system in Pernis incorporating reactor preheat, panel restart after a spurious trip, and gas transfer to the turbines controlled so that flaring of sulfur-containing gas can be eliminated. Further refinements are reported by Weigner *et al*. (2002). Plants in a predominately power production application include a load-following function to comply with the demands of the grid.

Reactor shell monitoring

Another safety aspect typical of all partial oxidation processes is the necessity of controlling and monitoring the reactor shell temperature in case of damage to the refractory lining. Early plants had to rely on a multiplicity of point thermocouples around the reactor, usually chosen to correspond with potential weak points in the refractory brickwork. This was often complemented by the use of thermosensitive paint and regular thermography. Later, special coaxial cables with a temperature-sensitive resistance between core and sheath became available. With these coils, a continuity of coverage became possible far in advance of the discrete point measurements previously used. On the other hand, location of the hot spot from these measurements was only possible with a grid of such coils and noting which two were showing the high temperature.

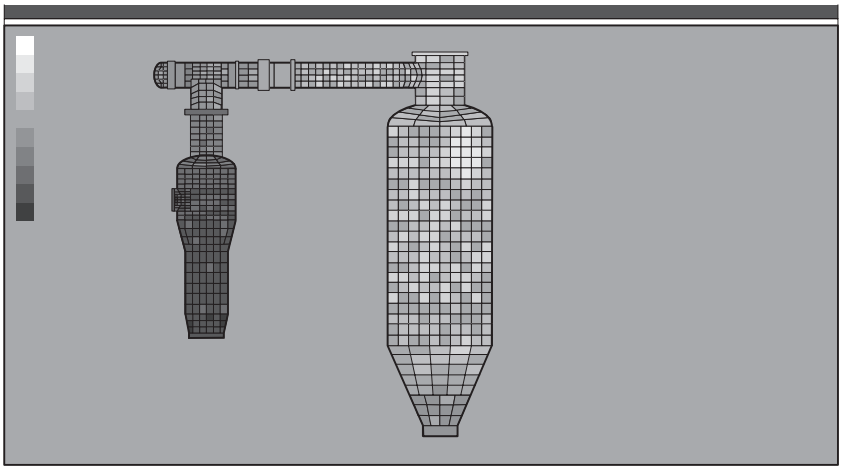

Figure 5.41 Screen shot of fiber-optic reactor shell temperature monitor (source: Nicholls, 2001).

Fiber-optic systems are now available that provide a combination of continuity and localization. With appropriate software, this can be converted into a screen visualization identifying hot spots on the control panel screen (see Figure 5.41) (Nicholls, 2001). This fiber-optic system has been used on oxygen-fired secondary reformers, and a number of GEE gasifiers have been equipped in this manner.

5.5 BIOMASS GASIFICATION

When looking at biomass conversion it is instructive to look at coal conversion, as there are many similarities. This is not so surprising, since biomass can be considered as a very young coal. For coal gasification the minimum temperature required is about 900°C, as is demonstrated in the old water-gas process in which the temperature during the steam run was allowed to drop from the maximum of 1300°C to 900°C. About the same minimum temperature of 800–900°C is required to gasify the most refractory part of almost any biomass. In other words, the temperature required for the complete thermal gasification of biomass is of the same order of magnitude as for coal. This high temperature, in combination with the impurities, whether sulfur or ash components, is why indirectly heated coal and biomass gasification processes in which external heat has to be transferred via a metal surface have not yet achieved any commercial success.

On the other hand, there are a number of significant differences between coal gasification and biomass gasification, which are directly attributable to the nature of the feedstock. First, there is the quality of the biomass ash, which has a comparatively low melting point, but in the molten state is very aggressive. Secondly, there is the generally high reactivity (see Figure 3.3) of biomass. Furthermore, particularly with vegetable biomass, there is its fibrous characteristic. Finally, there is the fact that, particularly in the lower temperature range, biomass gasification has a very high tar make (Milne *et al.*, 1998).

Although an entrained-flow process might have an apparent attraction in being able to generate a clean, tar-free gas as required for chemical applications, and the low melting point of the ash would keep the oxidant demand low, the aggressive quality of the molten slag speaks against using a refractory. Furthermore, the short residence times of entrained-flow reactors require a small particle size, to ensure full gasification of the char. No method of size reduction has yet been found that can be performed economically on fibrous biomass.

A number of moving-bed processes have been applied to lump wood, but they are limited to this material. They would not work on straw, miscanthus or other materials generally considered for large-scale biomass production unless these were previously bricketted. Furthermore, in a counter-flow gasifier, the gas would be heavily laden with tar. The alternative of co-current flow could reduce the tar problem substantially, but the necessity to maintain good control over the blast distribution in the bed restricts this solution to units of very small size.

With this background, it is probably not surprising that most processes for biomass gasification use fluid beds and aim at finding a solution to the tar problem outside

the gasifier. In co-firing applications, where the syngas is fired in an associated large-scale fossil fuel boiler, the problem can be circumvented by maintaining the gas at a temperature above the dewpoint of the tar. This has the added advantage of bringing the heating value of the tars and the sensible heat of the hot gas into the boiler.

There are many biomass processes at various stages of development. Summaries are given in, for example, Kwant (2001) and Ciferno and Marano (2002). A more recent overview is contained in Knoef (2005). The selection chosen here represents generally those that have reached some degree of commercialization.

5.5.1 Fluid-bed processes

Lurgi circulating fluid-bed process

The Lurgi CFB process is described in section 5.2. Plants operating on biomass and/or waste include that in Rüdersdorf in Germany (500 t/d waste) and Geertruidenberg in the Netherlands (400 t/d waste wood). In the latter plant, the hot gas leaving the cyclone at a temperature of about 500°C is directly co-fired in a 600 MW_e coal boiler. In Rüdersdorf, the gas is fired in a cement kiln (Greil *et al.*, 2002).

Foster Wheeler circulating fluid-bed process

The Foster Wheeler (originally Ahlstrom) CFB process was developed to process waste biomass from the pulp and paper industry. The first unit was built in 1983, and the gas used to supplement oil firing of a lime kiln for the paper industry. Three further units were built in Sweden and Portugal for similar applications. The size range is between 17 and 35 MW_{th}.

The largest unit to date has a capacity of 40–70 MW_{th} (depending on fuel), and operates co-firing the gas in an existing coal-fired boiler in Lahti in Finland (Anttikoski, 2002). The feed is primarily biomass, but various refuse-derived fuels are also used. A similar plant with wood feed is in operation in Belgium.

All these units operate at atmospheric pressure. In a different development, Foster Wheeler has also developed a pressurized version that formed the basis for the 6 MW_e biomass IGCC at Värnamo in Sweden (see Figure 5.42). The gasifier operates at 20 bar and has a capacity of 18 MW_{th}.

The gasifier feed is pressurized by lock-hoppers, and a screw feeder is used for the transport from the high-pressure charge bin. Gasification takes place at 950–1000°C. Primary ash removal is via lock-hoppers at the bottom of the gasifier. Fine particulate removal takes place in a hot gas filter with ceramic candles (later replaced by metal candles) at 350–400°C, at which temperature the gas enters the combustion chamber of the gas turbine. Tar production from the gasifier is reported to be less than 5 g/Nm³ dry gas. The demonstration program was completed in 1999 after over 8500 hours of operation. Technically, it has been a success. The economics are competitive vis-à-vis other biomass systems, but are still dependent on a general biomass-to-power subsidy (Sydkraft, 1998).

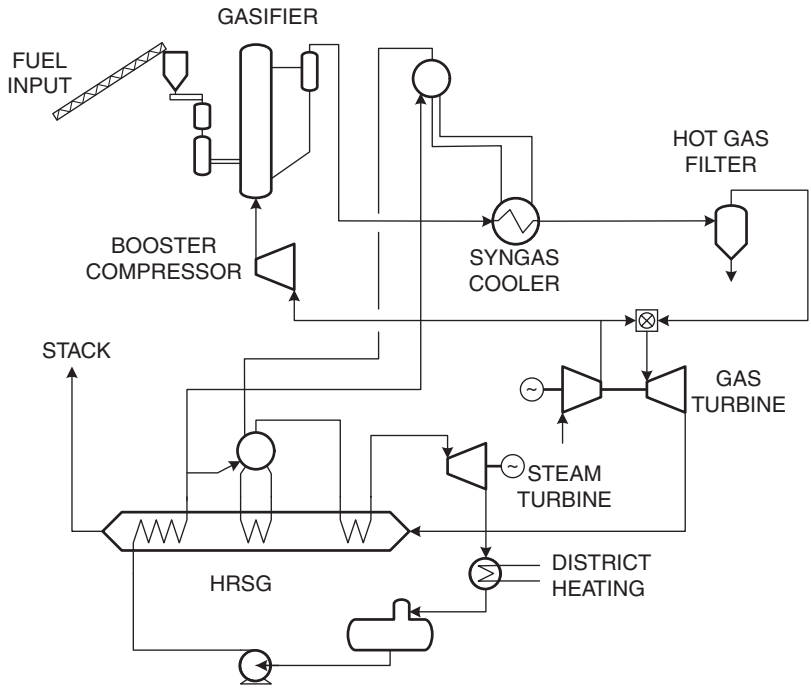

Figure 5.42 Flow diagram of Värnamo IGCC (source: Sydkraft, 1998).

As a result of the lack of commercial success without biomass subsidy, operation was stopped in 1999 and the plant mothballed. The plant is now being modified to operate on oxygen and steam to produce synthesis gas for a biomass-to-liquids demonstration (Ståhl *et al.*, 2006). Hot testing of the plant has been performed during 2007. The gas clean-up and liquids synthesis will be added later.

The TPS process

The TPS process of TPS Termiska Processer AB is an atmospheric CFB that was, like the Foster Wheeler process described above, developed in the mid-1980s to provide energy from waste biomass in the pulp and paper industry. The first commercial application was at Greve-in-Chianti in Italy, where two 15 MW_{th} units processing refuse-derived fuel went on stream in 1992 (Morris and Waldheim, 2001). The process was selected and built for the 8 MW_e ARBRE IGCC project in the UK (Morris and Waldheim, 2002). A notable feature of the TPS process is the tar cracker, which uses a dolomite catalyst in a second CFB.

Carbona process

The Carbona Company was formed in 1996 to take over the gasification assets of Tampella Power, which built a high-pressure coal-fired U-Gas plant in Tampella,

Finland, under licence to the of Gas Technology Institute (GTI). Among these assets was also a 20 MW_{th} pilot plant for testing a broad spectrum of biomass and other feedstocks at gasification pressures up to 30 bar. Operation of the pilot plant, including the associated gas clean-up systems, allowed Carbona to develop its own biomass gasification technology, which is now marketed independently of U-Gas. A commercial plant at Skive, Denmark, is being started up in 2007 (Patel, 2006). The plant is an extension of an existing biomass combustion-based district heating plant. The new plant is designed for 110 t/d biomass feed. The syngas will fuel three Jenbacher gas motors to provide 5.5 MW_e and supply 11.5 MW_{th} to the district heating network. The fuel is wood pellets with a moisture content of 9.5%. The plant includes a tar reformer developed by Carbona together with VTT, the Technical Research Center of Finland. Other projects include cooperation with GTI to develop and test a biomass oxygen-blown gasification process for suitability in connection with a Fischer-Tropsch synthesis.

After pre-handling (chipping and drying), the biomass feedstock is supplied to the gasifier through lock-hopper systems. The fuel is pressurized in the feeding system by using inert gas, and fed into the lower section of the bubbling fluidized bed by screw conveyors. The fluidized bed is separately fed inert material, which also acts as a catalyst for tar cracking. The fluidizing and gasifying medium is air and steam. The fluidizing gas is introduced into the reactor through a special gas distributor. The principle of the fluidized-bed gasifier is shown in Figure 5.43. The bulk of the fine particles (fuel ash and circulating bed material) elutriated from the gasifier is separated from the product gas in a single external cyclone. The fines are returned to the fluidized bed, maintaining an intensive external circulation.

Typical operating pressures are 20–30 bar, depending on the requirements of the downstream process. Operating temperatures are in the range 750–950°C, according to the properties of the biomass fuel. The gasifier and cyclone are both refractory lined.

Other pressurized fluid-bed processes

In addition to the processes described above and the HTW process described in section 5.2, there are some other processes operating in a pressurized fluid bed. Of note is GTI's RENUGAS process, which was applied in a 100 t/d bagasse fueled unit in Hawaii; this, however, is no longer in operation (Ciferno, 2002).

5.5.2 Twin fluid-bed steam gasification

The SilvaGas process

This two-stage atmospheric biomass gasification process was developed by Battelle, and the first commercial demonstration unit, with a feed capacity of 200 t/d, was built in Burlington, Vermont. Commercialization of the process has been taken over by Future Energy Resources (FERCO), which markets it under the name of

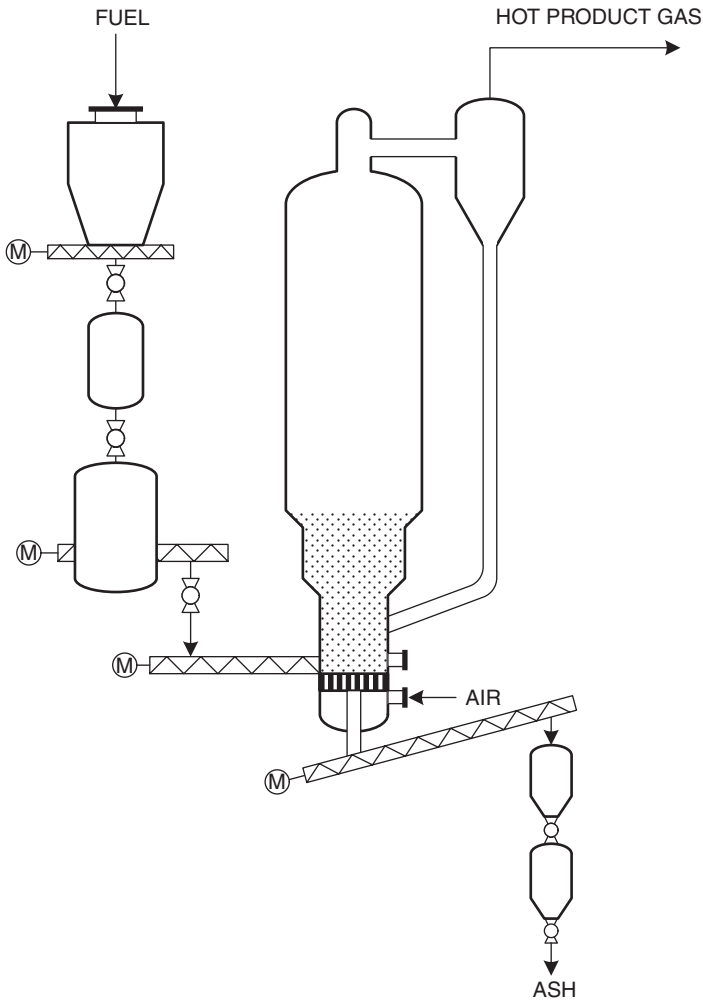

Figure 5.43 Carbona pressurized fluid-bed process (source: Patel, 2006).

SilvaGas. The medium Btu gas at the demonstration unit is fired in an existing biomass-fired boiler and is planned to be used later in a combustion turbine (Paisley and Overend, 2002).

The principle of the SilvaGas process (see Figure 5.44) is similar to that of a catalytic cracker in an oil refinery or of the Exxon Flexicoker process. In all these processes, two fluid-bed reactors are used. In one, an endothermic process takes place; in the SilvaGas process, the gasification of biomass occurs. The necessary heat for the reaction is supplied by a hot solid (sand, catalyst or coke), which is heated by an exothermic reaction in the second reactor.

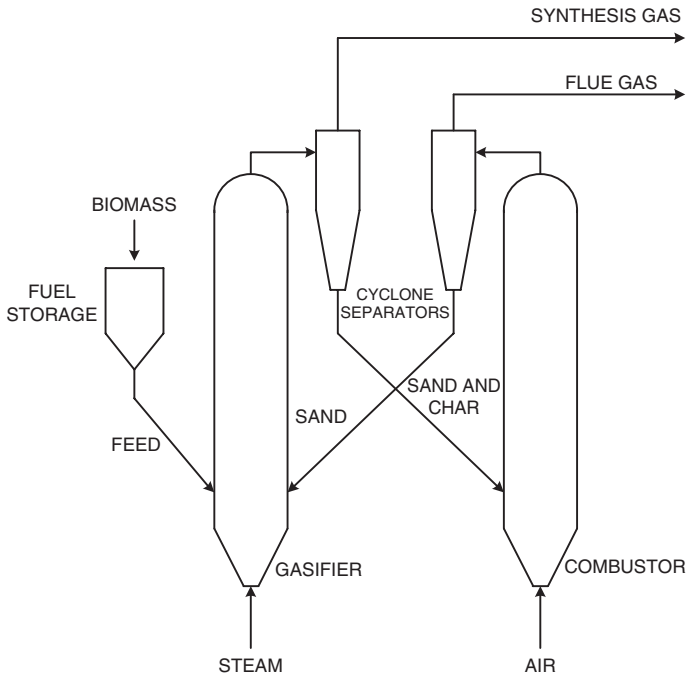

Figure 5.44 SilvaGas (Batelle) process (source: Paisly and Overend, 2002).

As in all biomass gasification processes, a feed preparation stage is necessary in which the biomass is reduced to 30 to 70 mm length chips, and oversized or foreign material such as metals are removed. The biomass is fed to the gasifier, where it is mixed with hot sand (at about 980°C) and steam. During the ensuing endothermic cracking reaction light gaseous hydrocarbons are formed, together with hydrogen and carbon monoxide. After separating the heat carrier and the gas in cyclones, the relatively cold heat carrier and residual unreacted char are discharged to the combustor or regenerator. The sand is reheated in the combustor by burning the char with air. The reheated sand is removed from the flue gas by a cyclone separator and returned to the gasifier.

The syngas from the gasifier still contains typically about 16 g/m³ tars. Depending on the application (e.g. for gas turbine fuel), these must be removed. Cracking catalysts, as used in the petroleum industry, are used to break down the heavy hydrocarbons. Work is continuing to find lower-cost disposable catalysts for this application. The syngas is cleaned up in a scrubber for alkali and particulate removal. A typical gas composition from the Burlington demonstration unit is shown in Table 5.18. Such a process has the advantage of producing a gas with a very low nitrogen content without the use of oxygen.

Table 5.18
Gas composition of SilvaGas

CO_2	mol%	12.2
CO	mol%	44.4
H_2	mol%	22.0
CH_4	mol%	15.6
C_2H_4	mol%	5.1
C_2H_6	mol%	0.7
HHV	MJ/Nm³	17.3

Source: Paisley and Overend, 2002.

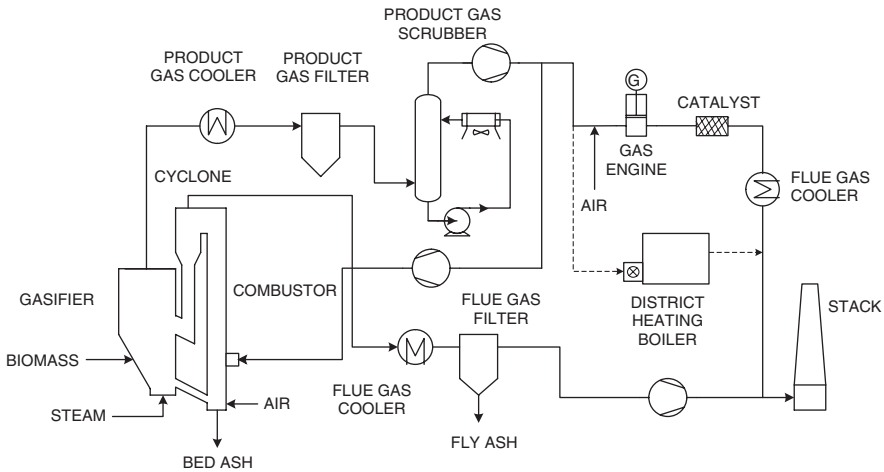

Figure 5.45 FICFB process (source: Hofbauer, 2002).

The flue gas is a valuable source of heat. Using it for pre-drying of the biomass feed helps increase the efficiency of the process, but alternative uses such as steam production may be applied if site-specific conditions favor this.

The FICFB process

The FICFB (Fast Internal Circulating Fluid-bed) process developed by the Vienna University of Technology in Austria is another process that separates steam gasification of the biomass from combustion of char as a source of heat for the former (see Figure 5.45). A 42 t/d feed commercial demonstration combined heat and power (CHP) unit has been built in the town of Güssing, where it is integrated into

Table 5.19
Gas composition of FICFB gas

CO_2	mol%	15–25
CO	mol%	20–30
H_2	mol%	30–45
CH_4	mol%	8–12
N_2	mol%	3–5
LHV	MJ/Nm³	12–14

Source: Hofbauer, 2002.

Table 5.20
Impurities in FICFB gas

		Raw gas	Clean gas
Tar	g/Nm³	0.5–1.5	<0.020
Particulates	g/Nm³	10–20	<0.010
NH_3	ppm	500–1000	<200
H_2S	ppm	20–50	

Source: Hofbauer, 2002.

the operations of the local district heating utility. The synthesis gas is fired in a gas motor generating 2 MW_e and 4.5 MW heat is supplied to domestic and industrial consumers. The plant was taken on stream in December 2001.

The gasifier operates as a stationary fluid-bed reactor with sand as the bed material. The sand and ungasified char leave the reactor at the bottom, and are transferred to the combustor where the char is burnt to heat the sand. The hot sand is separated from the flue gas in a cyclone and returned to the gasifier via a seal leg, bringing in the necessary heat for the gasification reaction, which takes place at about 850°C. The synthesis gas is cooled and cleaned for use in a gas motor. Of note is the use of an oil wash to remove tars. In the demonstration unit in Güssing, RME (rape methylester) is used as washing oil (Hofbauer, 2002). Gas compositions are given in Tables 5.19 and 5.20.

Other fluid-bed processes

There are many other fluid-bed processes in various states of development. A further example is the Blauer Turm technology, which also uses a heat carrier. It has been operated on both biomass and waste.

5.5.3 Entrained flow processes

The Choren process

Despite the general trend of using fluid-bed reactors for biomass gasification, there is at least one example of entrained-flow gasification of biomass. The Choren Company was founded in 1990 by staff of the former East German Deutsche Brennstoffinstitut with the objective of developing a commercial biomass gasification process as a basis for manufacturing transport fuels. The pilot (Alpha) plant was taken on stream in 1998. This was a 1 MW_{th} atmospheric, air-blown plant coupled to a Fischer-Tropsch unit to demonstrate biomass-to-liquids at the proof-of-concept level. During 2005, 5000 operational hours in this mode were achieved. First tests on a larger, oxygen-blown 45 MW_{th} (Beta) gasifier operating at about 5 bar were conducted in 2003. A 15,000 t/a Shell Middle Distillates Synthesis plant is under construction to use the gas from the Beta unit, and is due to come on stream early in 2008. Plans for a 160 MW_{th} unit are in development (Bienert, 2007).

Choren addresses the tar issue of biomass gasification by using a three-stage process (Figure 5.46; Choren, 2007) (Blades *et al*., 2005). In the first stage the biomass is fed via lock-hoppers into the stirred horizontal low-temperature gasifier and pyrolysed with oxygen at a temperature between 400 and 500°C. The pyrolysis gas and the char are extracted separately. The pyrolysis gas is then subjected to high-temperature gasification in the second process stage, which is the first section of the two-part Carbo-V® reactor. The high temperature (over 1400°C) in this part of the reactor effectively destroys the tars contained in the pyrolysis gas. A char/ash

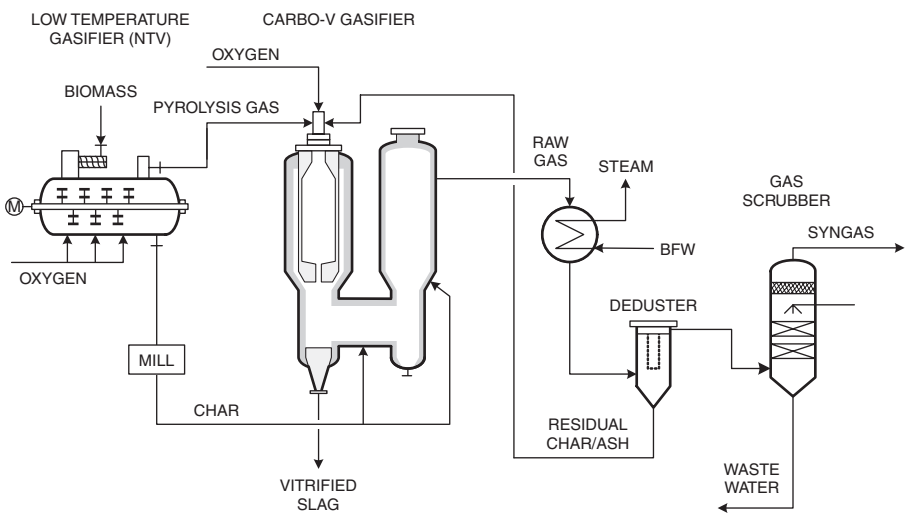

Figure 5.46 Choren process.

residue recycled from the third (chemical quench) stage is also processed in the high-temperature gasifier. Thus all the ash entering the plant sees slagging temperatures. A membrane wall covered with frozen slag is used for the high-temperature gasifier to cope with the aggressive biomass slag. The slag is quenched in a water bath at the bottom of the reactor and discharged as vitrified slag.

The char from the pyrolysis process is milled and injected into the second, chemical quench part of the Carbo-V® reactor. The hot gas leaving the high-temperature gasifier provides the heat for the endothermic gasification reaction, in which the pyrolysis char is gasified. The raw gas leaves the Carbo-V® reactor at a temperature of 800°C. The sensible heat in the raw gas is used to generate steam. Conversion of the char in the chemical quench is not complete, so that the unconverted char and ash still contained in the gas are removed in a particulate filter and recycled to the high temperature gasifier. Chlorides and ammonia in the gas are removed in a water wash. Additional gas treating (e.g. CO shift, trace sulfur removal) is required for Fischer-Tropsch quality syngas.

5.5.4 Pyrolysis processes

As discussed in section 4.3, the logistics of biomass collection will in general limit biomass gasification facilities to a maximum of 30–40 MW_{th}. In order to overcome this limitation in benefiting from the economies of scale, a combination of decentralized pyrolysis plants and a central bio-oil gasifier has been proposed (see, for example, Henrich *et al.*, 2002).

Figure 5.47 shows a generic bio-oil plant in which typically about 75% of the dry feedstock is recovered as bio-oil. Char (10–15 wt%) and gas (15–20 wt%) are

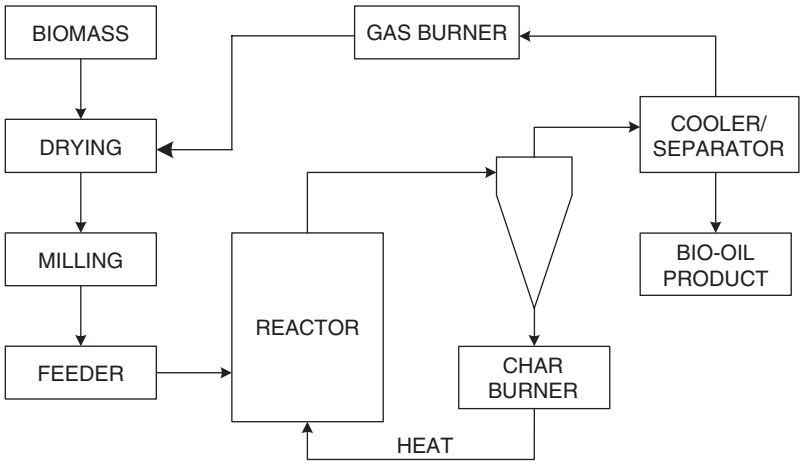

Figure 5.47 Block flow diagram for a bio-oil plant (source: Meier, 2002).

Table 5.21
Bio-oil pilot and demonstration plants

Company, country	Trade name	Plant size	Technology	Comments
Dynamotive, Canada	Biotherm™	10 t/d	Stationary fluid-bed	In planning 100 t/d UK, 200 t/d Canada
Wellman, UK		6 t/d	Stationary fluid-bed	Awaiting operation permit
ENSYN, Canada	RTP™	2*45 t/d	Circulating fluid-bed	40 t/d plant operating since 1996
ENEL, Italy			Circulating fluid-bed	
VTT, Finland		0.5 t/d	Circulating fluid-bed	
BTG, Netherlands		4 t/d	Rotating cone	In planning 10 t/d
Forschungszentrum Karlsruhe, Germany			Double screw	Lurgi LR process
Pyrovac, Canada		35 t/d	Vacuum pyrolysis	
Fortum/Vapo, Finland	Forestera™	12 t/d	Vacuum pyrolysis	Start-up May 2002 (Gust *et al.*, 2002)

recovered and combusted to supply the heat required for drying the feedstock and heating the reactor. The pyrolysis takes place at about 450–475°C with a residence time of the order of magnitude of 1 second.

Biomass pyrolysis processes are at this stage still in their infancy. There are a number of small-scale commercial and demonstration plants that have been built, the most important or representative of which are listed in Table 5.21.

The principle current use for bio-oil includes specialty chemicals, which are essential for economics at present (Freel, 2002).

Various projects are in preparation for testing equipment with bio-oil feeds. Fortum have a burner-testing program with Oilon Oy. Test programs for slow-speed marine diesel engines (e.g. Omrod) are under way, and tests are also being conducted on gas turbines. The amount of bio-oil currently available is small, however, and limits the opportunities for such testing.

Proposals for testing the gasification characteristics of bio-oil have also been made (Henrich *et al.*, 2002). Initial pilot testing has already been completed.

The European Union has a program to develop standards for bio-oil, considering end-user requirements. A guide to analysis and characterization methods specifically adapted to bio-oil products has been published (Oasmaa and Peacocke, 2002).

5.5.5 Other processes

Anaerobic digestion of biomass

One possible way to make use of a unique property of biomass is to convert it by means of biochemical reactions, but this subject, however interesting, falls beyond the scope of the present book. Suffice it to mention that anaerobic digestion is the most elegant and efficient gasification process in which (dirty) liquid water can be used as a gasifying agent and a cold gas efficiency of about 95% is obtained. Unfortunately, only the (hemi-)cellulose part of the biomass is converted in the presently available processes. The reaction for cellulose can be written as:

$$(C_6H_{10}O_5)_n + nH_2O = 3nCH_4 + 3nCO_2$$

Anaerobic digestion is only applied in small-scale units of below 5 MW to convert agricultural and liquid domestic waste (Krüger, 1995). The use of thermophilic microorganisms has made this conversion more attractive, but for a reasonable conversion of the biomass a period of 2–3 weeks is still required, which makes this process less suitable for large-scale plants. It could be that with hyper-thermophilic microorganisms this period can be reduced such that it can also be applied for larger-scale plants. Moreover, by using hyper-thermophiles, no sterilization stage is required, which is necessary where the digestion waste is to be recycled to farms and/or forests. Finally, hyper-thermophiles may eventually be found that also convert lignin. The gas produced is essentially a mixture of methane and CO_2, and can only be advantageously used for heating purposes and in combined heat and power (CHP) schemes using a gas motor or small gas turbine for the power generation.

5.6 GASIFICATION OF WASTES

Because of its varied nature, there are many different approaches to the gasification of waste. Some processes have already been described; in particular (but not only) fluid-bed processes have the possibility to be adapted to waste gasification. Others have been purpose developed for waste gasification. At present there are a large number of processes in various stages of development or demonstration. Schwager and Whiting (2002) report "some 71 novel thermal treatment plants that are already operating for waste applications including many that use gasification as their main conversion method"; they go on to list 26 of these that are considered commercially available. It is noticeable that very few have more than one or two reference plants,

and it must be expected that over the course of time the market will show which of these are the most effective concepts.

The two most important aspects specific to the gasification of municipal solid wastes are, first, the highly heterogeneous nature of the feed, and secondly, the extensive and stringent regulations on emissions.

5.6.1 Coal gasifiers in waste service

One example of a process that was originally developed for coal feeds but which has been successfully adapted for municipal solid waste (MSW) or refuse-derived fuel (RDF) service is the BGL moving-bed slagging gasifier described in section 5.1. A 650 t/d unit is in service for waste gasification at the Schwarze Pumpe facility in Germany, where it is part of a larger complex producing electric power and methanol. The plant operates with a 75% waste/25% coal feedstock (Greil *et al.*, 2002). Two other projects using this technology are in planning in the USA (Lockwood and Royer, 2001).

A second technology with many references in the coal combustion service that was later adapted for waste gasification is the circulating fluid-bed (see section 5.2.3). Examples are a plant in Rüdersdorf near Berlin, which produces some 50 000 Nm^3/h low Btu gas for a cement kiln from a wide variety of wastes (Greil *et al.*, 2002), and one at Geertruidenberg in The Netherlands, where waste wood is gasified to syngas that is fired in a 600 MW coal-fired power unit.

A third example is the HTW process (section 5.2.4), for which a 20 t/d pilot MSW gasifier has been built by Sumitomo in Japan. Although the HTW process operates in a non-slagging mode, it is possible to add a separate slagging unit into the process, should this be appropriate (Adlhoch *et al.*, 2000).

A final example is the liquid waste gasification of organic nitrogen compounds at Seal Sands using the Siemens gasifier (Schingnitz *et al.*, 2000).

Waste addition to coal gasifier feed

A number of other processes have demonstrated that they can accept small quantities of waste in the feed (Ricketts *et al.*, 2002). For example, in the Shell Coal Gasification unit in Buggenum, 30% waste biomass has already been added to the fuel, and plans are in progress to increase this amount (Hannemann *et al.*, 2002).

5.6.2 Purpose-developed processes

Pyrolysis processes

One feature of many processes specific to waste gasification is the use of a separate pyrolysis stage prior to partial oxidation. (In discussing waste gasification it

is important to keep a clear distinction, since the word gasification is often used indiscriminately for both.) Pyrolysis is sometimes used as a preliminary to partial oxidation of the tars and char in a separate reactor, as in, for example, the Thermoselect, Compact Power, Brightstar, PKA and Alcyon processes. Others do not include a partial oxidation stage, but have a more or less close-coupled combustion of the pyrolysis products, such as von Roll and Takuma. Also, where partial oxidation follows the pyrolysis, there are different approaches. Thermoselect, for example, claims to operate the pyrolysis at 300°C, then gasify with oxygen and quench the syngas prior to cleaning, thus having the option to use the syngas for power or chemicals production (Calaminus and Stahlberg, 1998). Compact Power, by contrast, operates with pyrolysis at 800°C, gasifies with air, and burns the syngas directly in a close-coupled combustor (Cooper, 2002).

Finally, there are some processes that only include pyrolysis, such as that of Thide, where the gas from the pyrolysis stage is used in a separate, not necessarily close-coupled, thermal value-recovery stage.

The issue of close-coupling a combustion stage can be an important one, even if not only in the technical sense. Where a distinction is made in regulations between gasification (as a process which makes a synthesis gas) and incineration, then the close-coupled combustor can be considered integral to the gasification stage and the whole unit is then classified as an incinerator. In some jurisdictions this can lead to unfortunate results, such as totally inappropriate personnel training requirements (Lockwood and Royer, 2001).

Fluid-bed gasification

There are a number of processes that use fluid-bed gasification without a separate pyrolysis stage – the coal-derived HTW and CFB processes mentioned above are examples. Others have been developed primarily for waste feeds, such as automotive shredder residues. Such a process is that of Ebara, which in one variant close-couples an air-blown fluid-bed gasifier with a cyclonic combustion chamber. The latter operates at about 1400°C and produces a molten slag. The Ebara process, which in fact originated as an air-blown incineration process, has been developed via atmospheric gasification to include pressurized gasification with a chemicals quality synthesis gas. The TwinRec variant of the Ebara process consists of a first stage fluid-bed air-blown gasifier operating under pyrolysis conditions at about 580°C, followed by a close-coupled downflow cyclonic combustion unit (Fujimura *et al.*, 2001). The latter operates at 1350–1450°C, and the slag is tapped at the bottom of this section. Six units were operational by 2003 and a further fourteen were at that time in various stages of design and construction.

A pressurized version of the fluid-bed pyrolysis unit, known as the Ebara-Ube process, has been developed in a 30 t/d pilot plant operating at about 10 bar and 600–800°C (see Figure 5.48). This is close-coupled to a high-temperature gasifier

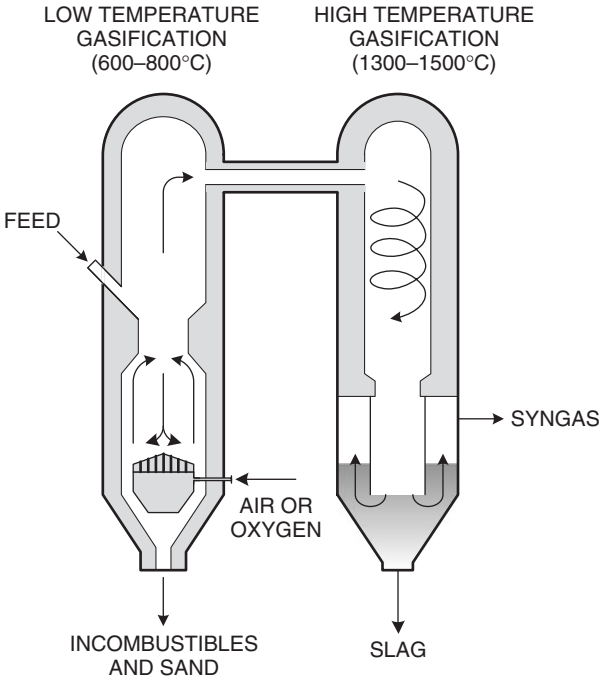

Figure 5.48 Ebara-Ube process (source: Steiner *et al.*, 2002).

operating at 1300–1500°C. The latter incorporates a water quench. An additional plant for 65 t/d is under construction at the same location, and the syngas produced will, after water scrubbing, be processed in a CO shift and PSA unit to provide hydrogen for an existing ammonia synthesis plant (Steiner *et al.*, 2002).

Another process using fluid-bed gasification is that of Enerkem. The product syngas can be made available for separate use for, for example, powering a gas engine.

Other processes

Finally, there are a number of approaches that cannot be included in the above summary classification. One such process is the Sauerstoff-Schmelz-Vergasung (2sv), which is one of the few current examples of a co-current moving-bed gasifier. The advantage of the concept lies in the much lower tar content in the gas compared with a counter-current moving-bed (Scheidig, 2002).

Another co-current moving-bed process is the Emery gasifier (Phillips, 2003). The technology was developed in a 25 tpd pilot plant in which scrap tires and wood have been gasified. An 8 bar, 2 tpd unit has also been built to test third-party feedstocks.

5.7 BLACK LIQUOR GASIFICATION

Black liquor gasification is a specialized field (see also section 4.3.2). Particular difficulties are the high inorganic load, particularly of sodium, and the requirement to recover this for recycling. In addition, the sodium poses problems for conventional refractory solutions. Add to this concern about the potential for tar formation from the lignin content, and it is understandable why only a few companies have attempted to realize this technology.

In comparison with conventional combustion technology (Tomlinson Boilers), pressurized black liquor gasification can increase the energy recovery in the pulping process from 65% using the most modern combustion equipment to about 75%. Compared with much of the existing installed equipment, of which the majority is 30 years of age or older, electric energy generation can increase by a factor of two to three. The quality of green liquor from a gasifier can provide process advantages, since sodium and sulfur are recovered separately for recycling to the digester, offering the opportunity for increased pulp yield and quality. The causticizing load does increase, however, which is a disadvantage.

In addition, the risk of a smelt-water explosion involved in conventional boiler technology is absent when gasifying black liquor, due to the small smelt inventory in the process.

5.7.1 The Chemrec process

Chemrec has built a number of small demonstration plants including a 75 tDS/d (tonnes dry solids per day), as well as one commercial unit of 300 tDS/d (Chemrec, 2002). These are all based on quench technology, and most use air as oxidant. One of the pilot plants was converted to oxygen gasification, and a second 30 bar oxygen-blown 20 tDS/d unit is now operating at the Energy Technology Centre (ETC) at Piteå, Sweden, close to the Kappa Kraftliner pulp and paper mill (Landlälv, 2006).

The Chemrec reactor is a refractory lined entrained-flow quench reactor operating at a temperature of 950–1000°C (see Figure 5.49). The organic material is gasified in the reaction zone. The inorganic material is decomposed into smelt droplets consisting of sodium and sulfur compounds. Carbon conversion is greater than 99.9%; tar formation is low.

The smelt droplets are separated from the gas phase in the quench zone, after which they are dissolved in the quench liquid to form a green liquor solution. The synthesis gas leaving the quench zone is scrubbed to remove particulate matter, primarily entrained alkaline particles, in a counter-current condensing tower.

The key to this process has been the successful development of a refractory lining that can withstand the aggressive liquid smelt environment. The lifetime of the current lining is over a year.

In the booster configuration, in which the gasifier is installed in parallel to an existing black liquor boiler as a de-bottlenecking measure, air is used as oxidant.

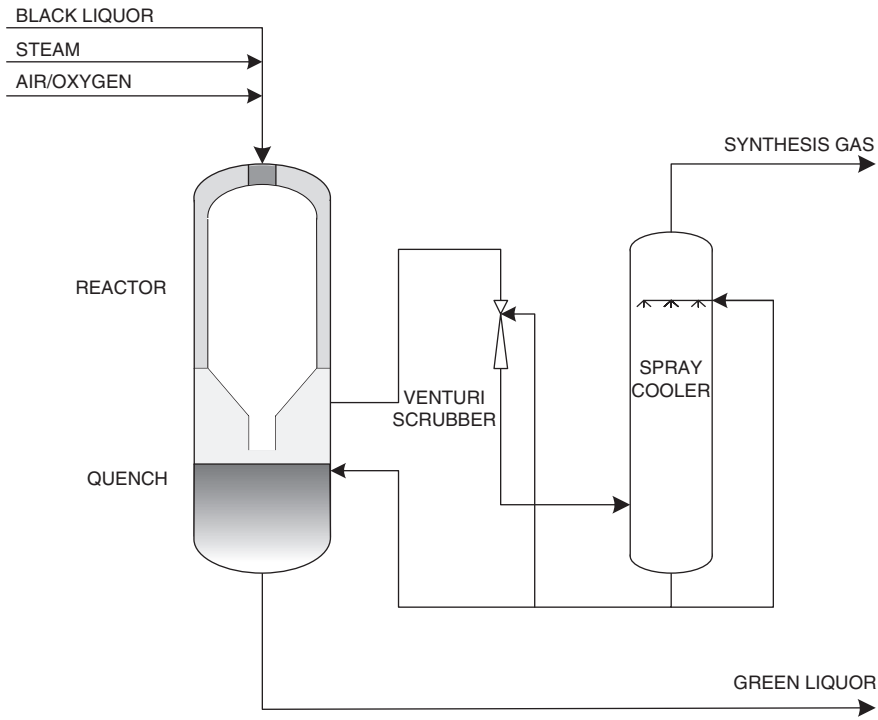

Figure 5.49 Chemrec black liquor gasification process (booster configuration) (source: adapted from Chemrec website).

The syngas is burnt untreated in a boiler to raise steam. Sulfur removal is effected by scrubbing the flue gas with oxidized white liquor.

Alternatively, a black liquor gasification combined cycle (BLGCC) can be used to replace the conventional black liquor boiler. In this configuration, the gasifier is oxygen blown at about 30 bar. A syngas cooler is installed for maximum heat recovery. Sulfur removal is then from the synthesis gas, using conventional acid gas removal technologies (see Chapter 8). A full BLGCC configuration can double the electric power production per tonne of black liquor, compared with a new recovery boiler. It can also provide the basis for a biorefinery attached to the pulp mill (Larson *et al*., 2006).

The first commercial-sized (330 tDS/d) booster unit was built for the Weyerhaeuser Company at New Bern (NC) in 1996. Initial problems, particularly in respect of the refractory lining, were overcome, and in 1999 the plant achieved an availability of 85%. This unit contributes about 15% to the total production of the mill.

The oxygen-blown pressurized pilot unit in Piteå has operated over 3000 hours, producing high quality, solids-free green liquor. Current developments include a reduction in CO_2 content of the green liquor and scale-up to a commercial size.

The use of a BLGCC can bring the same environmental advantages to pulp processing as other IGCC systems, as described in Chapter 9. Alternative use for

the syngas can be fuels production, and Chemrec has plans to add a DME unit to its existing pilot operation in Piteå (Landlälv, 2006).

5.7.2 MTCI PulseEnhanced™ steam reformer

The MTCI process is based on steam gasification at about 600°C using an indirect heat supply to the process via a heat exchanger built into the fluid-bed reactor. This has the advantage of operating at temperatures below the melting point of the smelt, but against this weighs the problem of tar production. The first 180 tDS/d demonstration plant is being built at Big Island, Virginia, due to start up in 2004. A number of conceptual issues, such as sulfur removal, still have to be resolved during the detailed execution of the project (DeCarrera, 2001). Should the demonstration plant show this technology to be successful, it will share a number of the principle advantages of gasification over combustion of black liquor, such as elimination of the smelt-water explosion risk, superior thermal efficiency, and lower emissions to the environment.

5.8 MISCELLANEOUS GASIFICATION PROCESSES

There are a number of gasification processes that, for various reasons, fall outside the categories that have been discussed here. These are *in situ* gasification of coal, also known as underground gasification, gasification in a molten metal or slag bath, plasma gasification and hydrogasification.

5.8.1 *In situ* gasification

Gasification of coal *in situ* has a number of obvious attractions. Such a process has the potential to tap resources not otherwise readily or economically accessible. It would also eliminate the safety hazards and costs associated with underground mining. The ash would be left underground.

The first recorded proposal for underground coal gasification (UCG) was by Siemens in 1868, followed by Mendeleyev 20 years later. Initial experiments in the United Kingdom were broken off by the advent of World War I. No further work was done until the 1930s, when an experimental station was started in the Donetsk coalfield in the then Soviet Union, to be followed by commercial installations in 1940 (Weil and Lane, 1949). Underground gasification continued at a number of locations in the Soviet Union until the late 1970s, with production of some 25,000 million Nm^3 of gas from around 6.6 million tons of coal (Ökten, 1994). This production came from seams of 50 to 300 m in depth.

In the 1980s, a number of small experimental units were operated in the United States. In Europe, tests have been conducted in Belgium (1986–1987), and then in Spain. The Spanish trial was aimed at demonstrating the feasibility of UCG using modern directional drilling techniques at a depth of 600 m. The trial operation

lasted for a period of 300 hours, during which 290 tonnes of coal were gasified (Green and Armitage, 2000).

The basic concept of UCG is to drill one or more wells into the coal seam where the blast is injected and others from which the fuel gas can be collected. There are a number of different methods that have been used to link injection and gas wells, some of which are depicted by Ökten (1994). Simple although the basic idea may be, there are many practical difficulties still to be overcome, and it is already clear that the technology can only be applied to certain types of coal seam. The hydrogeology of the seam is important, since excessive ingress of water would render the process uneconomic, and leakage of gas into underground water supplies could represent an environmental hazard. Both air and oxygen gasification have been tried. With air a very low Btu gas is produced, whereas with oxygen the cost of the blast and the losses make the process very costly. For these and other reasons, no commercial development has yet emerged.

There is currently one active project in Australia (Walker *et al.*, 2001). Operations using air injection commenced in December 1999 and by October 2002 32,000 tonnes of coal had been gasified. The peak gas production capacity is 80,000 Nm^3/h. Gas with a heating value of about 5 MJ/m^3 is produced at a pressure of 10 bar and a temperature of 300°C. During this demonstration phase the gas was flared. The operation has been shut down pending the proposed installation of a gas turbine or other user for the gas.

The South African utility Eskom has implemented a 6 MW_{th} pilot project at its Majuba site and flaring began early in 2007. The pilot project is designed to test the feasibility of co-firing UCG gas in the 600 MW_e power plant at costs lower than conventional mining technologies (Eskom Holdings Ltd, 2007).

5.8.2 Molten bath processes

A number of process developments were started using technology from the steel industry, typically the Klöckner molten iron process (Reimert and Schaub, 1989), in which use is made of a molten metal. Coal is introduced through tuyères and blown on top of a bath with molten iron that acts as a promoter for heat and mass transfer. The development of the process as a gasification technology has stopped, although further development has resulted in the HIsmelt steel-making process.

The Rummel gasifier and its pressurized development, the Saarberg-Otto gasifier, used a rotating bath of molten slag to provide a stable high-temperature environment in which the gasification took place. The coal particles and the gasification agent were blown tangentially onto the slag, which imparted the rotation. Two atmospheric plants each producing 16,000 Nm^3/h were closed down in 1964. The pressurized development was abandoned in the 1980s.

The most recent development in this class of gasifier is the HydroMax gasifier, which works over an iron bath using a cyclic process, and which produces separate streams of hydrogen and carbon monoxide in different parts of the cycle. This process is still in the research and development phase (Kindig, 2006). A biomass-fuelled demonstration plant is planned at a Californian paper mill for 2010.

5.8.3 Plasma gasification

A number of processes have been (or are being) developed that use plasma technology to input heat into the gasification process. One such technology is the Westinghouse (now Altenergy) plasma gasification process. A demonstration waste-to-energy plant has been operated in Japan, and a first commercial-scale 200 t/d plant has been completed, also in Japan (Dighe and Lazzara, 2002). Quapp *et al.* (2002) describe another plasma gasification process.

These processes are in an early stage of development. They share some of the typical characteristics of other high-temperature processes, namely production of an inert vitrified slag and a tar-free synthesis gas. Efforts appear to be concentrated particularly on the gasification of medical wastes, where sterility requirements demand high-temperature processing and the nature of the material makes the size reduction required for an entrained-flow process difficult.

5.8.4 Hydrogasification

During the 1970s and 1980s there was considerable interest in developing a direct process to produce synthetic natural gas by direct hydrogenation of coal to methane. The principle reaction involved is that of methanation, seen in Chapter 2 as equation (2.6):

$$C + 2H_2 \leftrightarrows CH_4 \qquad -75\ \text{MJ/kmol}$$

The thermodynamics of this reaction demand that it be operated at high pressure. Although the reaction is exothermic, the reactants must first be brought to a high temperature for the reaction to proceed at an economically acceptable rate. Furthermore, any development to exploit this reaction has to consider how to integrate the production of hydrogen into the process.

In many ways, the HKV (Hydrierende Kohlevergasung) process developed by Rheinbraun for the direct hydrogenation of brown coal to methane is typical of this class of gasification process (Speich, 1981). The process development unit had a throughput of 0.4 t/d raw brown coal. A pilot plant was then built for 24 t/d and went into operation in 1983. The process operates in a fluid-bed at temperatures between 850 and 930°C and pressures between 60 and 95 bar. Pressures of up to 120 bar were foreseen. Carbon conversion rates of 50–70% were achieved. The residual char is then gasified in a High Temperature Winkler gasifier (HTW, see section 5.2.3) for hydrogen manufacture.

Although the pilot plant achieved the goals that had been set for it, the increasing availability of natural gas rendered the whole direction of the development superfluous, and all such developments were stopped long before 1990.

REFERENCES

Adlhoch, W., Keller, J. and Herbert, P.K. (1990). "Kombikraftwerk mit dem HTW-Verfahren". Paper presented at VGB Conference "Wirbelschichtsysteme 1990", Essen, November.

Adlhoch, W., Keller, J. and Herbert, P.K. (1991). "Das Rheinbraun HTW-Kohlevergasungsverfahren". Paper presented at VGB Conference "Kohlevergasung 1991", Dortmund, May.

Adlhoch, W., Sato, H., Wolff, J. and Radtke, K. (2000). "High Temperature Winkler gasification of municipal solid waste". Paper presented at Gasification Technologies Conference, San Francisco.

Amick, P. (2004). "E-Gas technology for gasification". Paper presented at Gasification Technologies Conference, Washington.

Anderson, B., Huynh, D., Johnson, T. and Pleasance, G. (1990). "Development of integrated drying and gasification of brown coal for power generation". Paper presented at IChemE Conference "Gasification: The Gateway to a Cleaner Future". Dresden.

Anon (2007). Australian Government funds major demonstration projects. *Modern Power Systems*, 27(5): 44–45

Anttikoski, T. (2002). "Circulating fluidized bed gasifier offers possibility for biomass and waste utilization and for substitution of natural gas by syngas from coal gasification". Paper presented at IChemE Conference "Gasification: The Clean Choice for Carbon Management", Noordwijk, The Netherlands.

Appl, M. (1999). *Ammonia: Principles and Industrial Practice*. Weinheim: Wiley-VCH.

Becker, J. (1969). Examples for the design of heat exchangers in chemical plants. *Verfahrenstechnik*, 3(8): 335–340.

Beránek, J., Rose, K. and Winterstein, G. (1975). *Grundlagen der Wirbelschicht-Technik*. Leipzig: Krausskopf.

Bienert, K. (2007). "CHOREN world scale BTL facilities: technology and site evaluation". Paper presented at the Freiberg IGCC and XtL Conference, Freiberg, May.

Blades T., Rudloff M. and Schulze O. (2005). "Sustainable SunFuel from CHOREN's Carbo-V® process". Paper presented at the ISAF XV, San Diego, September.

Bockelie, M.J., Denison, M.K., Chen, Z., Linjewile, T., Senior, C.L., Sarofim, A.F. and Holt, N.A. (2002). "CFD modelling for entrained-flow factors". Paper presented at Gasification Technologies Conference, San Francisco, October 27–30.

Bögner, F., Wintrup, K. (1984). The fluidized-bed coal gasification process (Winkler type). In: R.A. Meyers, (ed.), *Handbook of Synfuels Technology*. New York: McGraw-Hill, pp. 3–111 to 3–125.

Brejc, M. (1989). "Gas production". In: *Ullmann's Encyclopedia of Industrial Chemistry*, 5th edn, vol. A12. Weinheim: VCH Verlagsgesellschaft, pp. 206–213.

Bressan, L. and Curcio, S. (1997). "A key aspect of integrated gasification combined cycle plants availability". Paper presented at IChemE Conference "Gasification Technology in Practice", Milan.

Brooks, C.T., Stroud, H.J.F. and Tart, K.R. (1984). British Gas/Lurgi slagging gasifier". In: R.A. Meyers (ed.), *Handbook of Synfuels Technology*. New York: McGraw-Hill, pp. 3–63 to 3–86.

Butzert, H.E. (1976). Ammonia/methanol plant startup. *Chemical Engineering Progress*, 72: 78–81.

Calaminus, B. and Stahlberg, R. (1998). Continuous in-line gasification/vitrification process for thermal waste treatment: process technology and current status of projects. *Waste Management*, 18.

Chemrec (2002). www.chemrec.se.

Choren GmbH (2007). www.choren.com (available 31 May 2007).

Ciferno, J.P. and Marano, J.J. (2002). *Benchmarking Biomass Gasification Technologies for Fuels, Chemicals and Hydrogen Production*. Washington, DC: US Department of Energy/ National Energy Technology Laboratory (NETL) Report, June.

Cooper, N. (2002). "Compact power puts pyrolysis at the heart of sustainable developments optimizing value recovery". Paper presented at Pyrolysis and Gasification of Biomass and Waste Expert Meeting, Strasbourg, September.

Curran, P. and Tyree, R.F. (1988). "Feedstock versatility for Texaco gasification". Paper presented at IChemE Conference "Gasification: The Gateway to a Cleaner Future", Dresden.

Czytko, M.P., Gaupp, K. and Müller, R. (1983). Syngas from heavier residues. *Hydrocarbon Processing*, 62(9): 115–119.

Darby, A. (2005). "Status of the Pratt & Whitney Rocketdyne/DOE advanced single stage gasifier development program". Paper presented at Gasification Technologies Conference, San Francisco.

DeCarrera, R. (2001). "Demonstration of black liquor gasification at Georgia-Pacific's Mill in Big Island, Virginia". Paper presented at Maine Energy and Technology Expo.

de Graaf, J. D. and Magri, A. (2002). "The Shell Gasification Process at the Agip Refinery in Sannazzaro". Paper presented at IChemE Conference "Gasification: The Clean Choice for Carbon Management", Noordwijk.

de Graaf, J.D., Zuiderveld, P.L., Posthuma, S.A. and van Dongen, F.G. (1998). "Initial operation of the Shell Pernis residue gasification project". Paper presented at IChemE Conference "Gasification: the Gateway to a Cleaner Future", Dresden.

de Graaf, J.D., Zuiderveld, P.L., van Dongen, F.G. and Hölscher, H. (2000). "Shell Pernis Netherlands Refinery residue gasification project". Paper presented at IChemE Conference "Gasification 4 the Future", Noordwijk.

Dighe, S.V. and Lazzara, D. (2002). "Westinghouse plasma gasification technology for application to coal gasification and co-fired coal/biomass gasification". Paper presented at 19th International Pittsburgh Coal Conference, Pittsburgh.

Erasmus, H.B. and van Nierop, P. (2002). "Sasol: fifty years of growth". Paper presented at IChemE Conference "Gasification: The Clean Choice for Carbon Management", Noordwijk.

Erdmann, C., Liebner, W. and Schlichting, H. (2002). "MPG Lurgi Multipurpose Gasification: initial operating experience at a VR-based ammonia plant". Paper presented at IChemE Conference "Gasification: The Clean Choice for Carbon Management", Noordwijk.

Eskom Holdings Ltd (2007). Press Release, 25 January.

Fujimura, H., Oshita, T. and Naruse, K. (2001). "Fluidized-bed gasification and slagging combustion system". Paper presented at IT3 Conference, Philadelphia, May.

Freel. B. (2002). Ensyn Announces Commisioning of New Biomass Facility. *Pyne Newsletter* 14 (September). Aston, UK.

Green, M. and Armitage, M. (2000). "Underground coal gasification: what next after the European trial?" Paper presented at IChemE Conference "Gasification 4 the Future", Noordwijk.

Greil, C. and Hirschfelder, H. (1998). "Biomass integrated CFB gasification combined cycle plants". Paper presented at IChemE Conference "Gasification: Gateway to a Cleaner Future", Dresden.

Greil, C., Hirschfelder, H., Turna O. and Obermeier, T. (2002). "Operational results from gasification of waste material and biomass in fixed bed and circulating fluidized bed gasifiers". Paper presented at IChemE Conference "Gasification: The Clean Choice for Carbon Management", Noordwijk.

GTI (2007). The GTI Gasification Process. Company leaflet. Des Plaines: Gas Technology Institute.

Gumz, W. (1950). *Gas Producers and Blast Furnaces*. New York: John Wiley & Sons.

Gust, S., Nieminen, J-P. and Nyrönen, T. (2002). "Forestera™ – liquefied wood fuel pilot plant". Paper presented at Pyrolysis and Gasification of Biomass and Waste Expert Meeting, Strasbourg.

Hannemann, F., Kanaar, M., Karg, J. and Schiffers, U. (2002). "Buggenum experience and improved concepts for syngas application". Paper presented at Gasification Technologies Conference, San Francisco.

Hannemann, F., Schingnitz, M. and Zimmermann, G. (2007). "Siemens IGGC and gasification technology: today's solution and developments". Paper presented at 2nd Freiberg International Conference on IGCC and XtL Technologies, Freiberg.

Hartung, J. and Darby, A. (2006). "Pratt & Whitney compact gasification system: leveraging 50 years of rocket engine technology to reduce cost and increase availability". Paper presented at Gasification Technologies Conference, Washington.

Henrich, E., Dinjus, E. and Meier, D. (2002). "Flugstromvergasung von flüssigen Pyrolyseprodukten bei hohem Druck: Ein neues Konzept zur Biomassevergasung". Paper presented at DGMK Conference "Energetische Nutzung von Biomassen", Velen.

Higman, C.A.A., and Heurich, H. (1993). "Partial oxidation in the refinery hydrogen management scheme". Paper presented at AIChE Spring Meeting, Houston.

Higman, C.A.A. (1994). "Perspectives and experience with partial oxidation of heavy residues". Paper presented at AFTP Conference "L'Hydrogène, Maillon Essentiel du Raffinage de Demain", Paris.

Higman, C.A.A. (2002). "New developments in soot management". Paper presented at IChemE Conference "Gasification: The Clean Choice for Carbon Management", Noordwijk.

Hirschfelder, H., Buttker, B., and Steiner, G. (1997). "Concept and realisation of the Schwarze Pumpe 'Waste to Energy and Chemicals Centre'". Paper presented at IChemE Conference "Gasification Technology in Practice", Milan.

Hofbauer, H. (2002). "Biomass CHP-Plant Güssing: a success story". Paper presented at Pyrolysis and Gasification of Biomass and Waste Expert Meeting, Strasbourg.

Holt, N.A. and van der Burgt, M.J. (1997). "Biomass conversion: prospects and context". Paper presented at 16th EPRI Gasification Technology Conference, San Francisco.

IPG (1990). *Coal Gasification, Clean Coal Technology*. Doncaster, International Power Generation. May 1990.

Johnson, T. (2001). "A competitive gasification technology for brown coal". Paper presented at EPRI/VGB Conference on Lignites and Low-Rank Coal, Wiesbaden.

Jungfer, H. (1985). Synthesis gas from refinery residues. *Linde Reports on Science and Technology*, 40.

Kaneko, S, Ishibashi, Y. and Wada, J. (2002). "Project status of 250 MW air-blown IGCC demonstration plant". Paper presented at Gasification Technologies Conference, San Francisco.

Kaneko, S. (2006). "Status of 250 MW air-blown IGCC". Paper presented at Gasification Technologies Conference, Washington.

Keller, H. J., Brandl, A., Buxel, M. and Klos, W. (1997). "Efficient and reliable oil-based IGCC plant concept combining proven technological concepts: advanced burner technology, waste heat recovery, soot processing". Paper presented at IChemE Conference "Gasification Technology in Practice", Milan.

Kersten, S.R.A. (2002). *Biomass Gasification in Circulating Fluidized Beds*. Enschede: Twente University Press.

Kindig, J.K. (2006). "The HydroMax process". Paper presented at Gasification Technologies Conference, Washington.

Knoef, H. (ed.) (2005). *Handbook of Biomass Gasification*. Enschede: BTG Biomass Technology Group.

Koopman, E,. Regenbogen, R.W. and Zuideveld, P.L. (1993). "Experience with the Shell Coal Gasification process". Paper presented at VGB Conference "Buggenum IGCC Demonstration Plant".

Krüger, A.S. (1995). *Hashøj Biogas Plant: Combined Heat and Power for Two Urban Districts*. Denmark: Rosenberg Bogtryk.

Krupp-Koppers (1996). *Prenflo: Clean Power Generation from Coal*. Essen: Krupp-Koppers.

Kunii, D. and Levenspiel, O. (1991). *Fluidization Engineering*. (2nd edn.). New York: John Wiley & Sons.

Kwant, K.W. (2001). *Status of Gasification in Countries Participating in the IEA Bioenergy Gasification Activity*. International Energy Agency Report, April 2001.

Landlälv, I. (2006). "Production of biomass-based DME and methanol via black liquor gasification". Paper presented at Gasification Technologies Conference, San Francisco, October.

Larson, E.D., Consonni, S., Katofsky, R.E., Iisa, K., and Frederik, W.J. (2006). *A Cost-Benefit Assessment of Gasification-Based Biorefining in the Kraft Pulp and Paper Industry*, US Department of Energy Report DE-FC26-04NT42260. Washington, DC: US Department of Energy.

Leonard, R., Rogers, L., Vimalchand, P., Liu, G., Smith, P.V. and Longanbach, J. (2001). "Development status of the transport gasifier at the PSDF". Paper presented at Gasification Technologies Conference, San Francisco.

Liebner, W. (1998). "MPG – Lurgi/SVZ Multi-purpose gasification: a new and proven technology." Paper presented at Refinery Technology Meet, Mumbai.

Lockwood, D.N., and Royer, P.R. (2001). "Permitting and regulatory issues associated with development of an IGCC project". Paper presented at Gasification Technologies Conference, San Francisco.

Lohmann, C., and Langhoff, J. (1982). "The development project 'Ruhr 100' – an advanced Lurgi gasifier". Paper presented at 15th World Gas Conference, Lausanne.

Lorson, H., Schingnitz, M. and Leipnitz, Y. (1995). "The thermal treatment of wastes and sludges with the Noell entrained-flow gasifier". Paper presented at IChemE Conference "Gasification: An Alternative to Natural Gas", London.

Lurgi (1970). *Lurgi Handbuch*. Frankfurt: Lurgi Gesellschaften.

Lurgi (1992). *Lurgi Gas Production Technology: The Shell Gasification Process*, Lurgi Brochure 189e/6.92/2.20. Frankfurt: Lurgi Gesellschaften.

Lurgi (1997). *Lurgi, der Technologie-orientierte Anlagenbauer, 1897–1997*. Frankfurt: Lurgi Gesellschaften.

Marklund, M. (2001). *Black Liquor Recovery: How Does It Work?* Available at www.etcpitea.se/blg/document/PBLG_or_RB.pdf (accessed December 2001).

Maule, K. and Kohnke, S. (1999). "Technical, economic and environmental improvements at Hydro Agri Brunsbüttel: the solution to the soot problem in an HVR gasification plant". Paper presented at Gasification Technologies Conference, San Francisco.

Meier, D. (2002). "Flash-Pyrolyse zur Verflüssigung von Biomasse – Stand der Technik". Paper presented at DGMK Conference "Energetische Nutzung von Biomassen", Velen.

Milne, T.A., Evans, R.J. and Abatzoglou, N. (1998). *Biomass Gasification 'Tars': Their nature, Formation and Conversion*. Golden, CO: NREL Report NREL/TP-570-25357.

Moock, N. and Trapp, W. (2002). "Gasification plant design and operation considerations from an operator's perspective". Paper presented at Gasification Technologies Conference, San Francisco.

Morris, M. and Waldheim, L. (2001). "Efficient power generation from wood gasification". Paper presented at IChemE Conference "Gasification 4 the Future", Noordwijk, The Netherlands.

Morris, M. and Waldheim, L. (2002). "Update on Project ARBRE, UK". Paper presented at IChemE Conference "Gasification: The Clean Choice for Carbon Management", Noordwijk, The Netherlands.

Nicholls, P. (2001). Monitoring for hot spots and leaks using fiber-optic technology. *Hydrocarbon Processing*, 80(11): 101–107.

Oasmaa, A. and Peacocke, C. (2002). *A Guide to Physical Property Characterization of Biomass-Derived Fast Pyrolysis Liquids*. Espoo: VTT Publications.

Ökten, G. (1994). Underground gasification of coal. In: O. Kural (ed.), *Coal*. Istanbul: Istanbul Technical University, pp. 371–378.

Patel, J. (2006). "Skive BGGE/CHP plant project". Paper presented at IEA Bioenergy Workshop, Chicago.

Paisley, M.A. and Overend, R.P. (2002). "Verification of the performance of Future Energy Resources SilvaGas biomass gasifier: operating experience in the Vermont gasifier". Paper presented at 19th International Pittsburgh Coal Conference, Pittsburgh.

Pelofsky, A.H. (1977). *Heavy Oil Gasification*. New York: Marcel Dekker.

Perry, R.H. and Chilton, C.H. (1973). *Chemical Engineer's Handbook*. (5th edn). Tokyo: McGraw-Hill Kogakusha.

Phillips, B. (2003). "Technical and economic evaluation of a 70 MW_e biomass IGCC using Emery Energy's gasification technology". Paper presented at Gasification Technologies Conference, San Francisco.

Pinkston, T. (2006). "Orlando gasification project: demonstration of a 285 MW_e coal-based transport gasifier". Paper presented at Gasification Technologies Conference, Washington.

Quapp, W.J., Cohn, D.R., McDonald, T., Surma, J.E. and Lamar, D.E. (2002). "Steam reforming gasification of coal, wastes and other renewable feedstocks to produce hydrogen and power using the plasma enhanced melter". Paper presented at 19th International Pittsburgh Coal Conference, Pittsburgh.

Reimert, R., and Schaub, G. (1989). Gas production. In: *Ullmann's Encyclopedia of Industrial Chemistry*, 5th edn, vol. A12. Weinheim: VCH Verlagsgesellschaft.

Renzenbrink, W., Wischnewski, R., Engelhard, J. and and Mittelstädt, A. (1998). "High Temperature Winkler coal gasification: a fully developed process for methanol and electricity production". Paper presented at Gasification Technologies Conference, San Francisco.

Renzenbrink, W., Wolf, K.J., and Ewers, J. (2007). "RWE Power's zero-CO_2 IGCC power plant: first steps towards commercial implementation". Paper presented at 2nd International Freiberg Conference on IGCC and XtL Technologies, Freiberg.

Ricketts, B., Hotchkiss, R., Livingston, B. and Hall, M. (2002). Technology status review of waste/biomass co-gasification with coal. Paper presented at IChemE Conference "Gasification: The Clean Choice for Carbon Management", Noordwijk.

Rigdon, R. and Avidon, A. (2005). "GE Energy and Bechtel's IGCC reference plant offering". Paper presented at Gasification Technologies Conference.

Rogers, L.H., Bonsu, A.K., Eiland, J.D., Gardner, B.F., Powell, C.A., Booras, G.S., Breault, R.W. and Salazar, N. (2005). "Power from PRB – four conceptual IGCC plant designs using the transport gasifier". Paper presented at the 22nd Annual International Pittsburgh Coal Conference, Pittsburgh.

Rudolf, P. (1984). Lurgi coal gasification (moving-bed gasifier). In: R.A. Meyers (ed.), *Handbook of Synfuels Technology*. New York: McGraw-Hill.

Sakamoto, K. (2007). "Deployment of air-blown IGCC technology with carbon capture". Paper presented at Gasification Technologies Conference, San Francisco.

Samant, G., Higman, C.A.A., Krishnan, K., Sturm, P., Heidsieck, K. and Kowallik, W. (1991). Verfahren zur thermischen Behandlung von Vanadium enthaltenden Rückständen. European patent EP 0 542 322 B1.

Scheidig, K. (2002). In 3. Generation. *UmweltMagazin*, May: 80–83.

Schingnitz, M. (2003). Gasification: an opportunity to design environmentally compatible processes in the chemical and pulp and paper industry. *Chemical Engineering and Technology*, 26: 9.

Schingnitz, M., Gaudig, U., McVey, I. and Wood, K. (2000). "Gasifier to convert nitrogen waste organics at Seal Sands, UK". Paper presented at IChemE Conference "Gasification 4 the Future", Noordwijk.

Schlinger, W.G. (1984). The Texaco coal gasification process. In: R.A. Meyers (ed.), *Handbook of Synfuels Technology*. New York: McGraw-Hill: 3–5 to 3–25.

Schwager, J. and Whiting, K.J. (2002). "European waste gasification: technical and public policy trends and developments". Paper presented at Gasification Technologies Conference, San Francisco.

Simbeck, D.R., Korens, D.R. and Biasca, F.E., Vejtasa, S. and Dickenson, R.L. (1993). *Coal Gasification Guidebook: Status, Applications and Technologies*. Palo Alto: Electric Power Research Institute (EPRI).

Smith, P.V., Davis, B.M., Vimalchand, P., Liu, G. and Longarbach, J. (2002). "Operation of the PDSF transport gasifier". Paper presented at Gasification Technologies Conference, San Francisco.

Speich, P. (1981). Braunkohle auf dem Weg zur großtechnischen Veredlung. *VIK-Mitteilungen*, 3/4.

Sprouse, K.M., Matthews, D.R. and Weber, G.F. (2006). "The PWR/DOE high-pressure ultra-dense phase feed system and rapid-mix multi-element injector for gasification". Paper 49.3 presented at the 23rd International Pittsburgh Coal Conference, Pittsburgh.

Sprouse, K.M., Matthews, D.R. and Weber, G.F. (2007). "PWR compact dry feed system development". Paper presented at 2nd International Freiberg Conference on IGCC and XtL Technologies, Freiberg.

Ståhl, K., Waldheim, L., Morris, M. and Bengtsson, S. (2006). "CHRISGAS Project – clean hydrogen-rich gas through biomass gasification and hot gas upgrading". Paper presented at 7th European Gasification Conference, Barcelona.

Steiner, C., Kameda, O., Oshita, T. and Sato, T. (2002). "EBARA's fluidized bed gasification: atmospheric 2 × 225 t/d for shredding residues recycling and two-stage pressurized 30 t/d for ammonia synthesis from plastic wastes". Paper presented at the 2nd International Symposium on Recycling of Plastics, Oostende.

Stönner, H.-M. (1989). Gas production. In: *Ullmann's Encyclopedia of Industrial Chemistry*, 5th edn, vol. A12. Weinheim: VCH Verlagsgesellschaft.

Supp, E. (1990). *How to Produce Methanol from Coal*. Berlin: Springer.

Sydkraft. (1998). *Värnamo Demonstration Project: Construction and Commissioning*. Malmö: Sydkraft AB.

Tajima, M. and Tsunoda, J. (2002). Development status of the EAGLE gasification pilot plant". Paper presented at Gasification Technologies Conference, San Francisco.

Teggers, H. and Theis, K.A. (1980). "The Rheinbraun High-Temperature Winkler and hydrogasification processes". Paper presented at First International Gas Research Conference, Chicago.

Tils, H.M.G.C. (1994). Carbon Burn-off Process. European Patent EP 0606957.

Trapp, W. (2001). "Eastman and gasification: the next step, building on past success". Paper presented at Gasification Technologies Conference, San Francisco.

US Department of Energy (DoE) (2000). *The Wabash River Coal Gasification Repowering Project, Final Technical Report*, August. Washington, DC: US Department of Energy.

US Department of Energy (DoE) (2000). *The Wabash River Coal Gasification Repowering Project*, Topical Report No. 20, September. Washington, DC: US Department of Energy.

US Department of Energy (DoE) (2002). *The Wabash River Coal Gasification Repowering Project: A DOE Assessment*, DOE/NETL Report 2002/1164, January. Washington, DC: US Department of Energy.

US Department of Energy (DoE) (2002). *Tampa Electric Polk Power Station Integrated Gasification Combined Cycle Project, Final Technical Report*, August. Washington, DC: US Department of Energy.

US Department of Energy (DoE) (2002). *Piñon Pine IGCC Power Project: A DOE Assessment*, DOE/NETL Report 2003/1183, December. Washington, DC: US Department of Energy.

US Department of Energy (DoE) (2006). *Practical Experience Gained During the First Twenty Years of Operation of the Great Plains Gasification Plant and Implications for Future Projects*, April. Washington, DC: US Department of Energy.

US Department of Energy (DoE) (2006). *Comparison of Pratt and Whitney Rocketdyne IGCC and Commercial IGCC Performance*, DOE/NETL Report 401/062006, June. Washington, DC: US Department of Energy.

Vail, T. (2007). "SES deployment & commercialization of U-Gas gasification technology". Paper presented at Gasification Technologies Conference, San Francisco.

van der Burgt, M.J. and Naber J.E. (1983). "Development of the Shell Coal Gasification process (SCGP)". Paper presented at Advanced Gasification Symposium, Shanghai.

van der Burgt, M.J., Hope, T., Malchavek, R.V. and Perry, R.T. (1988)."Integrated gasification and combined cycle power generation". Paper presented at 6th Advanced Coal Gasification Symposium, Hangzhou, China.

Van der Ploeg, R., Grootveld, G., Fleys, M. *et al.* (2007). "Nuon Magnum power initiative 1200-MW_e multi-feed IGCC". Paper presented at 2nd Freiberg International Conference for IGCC and XtL technologies, Freiberg.

Viswanathan, G., Rajasekaran, A. and Periyakaruppan, V. (2006). "Experience in a 6.2 MW_e pressurized fluidized bed gasifier with high-ash Indian coals". Paper presented at 7th European Gasification Conference, Barcelona.

Walker, L.K., Blinderman, M.S. and Brun, K. (2001). "An IGCC project at Chinchilla, Australia based on underground gasification". Paper presented at Gasification Technologies Conference, San Francisco.

Wallace, F., Guan, X.F., Leonard, R. *et al.* (2006). "Operation of the Transport Gasifier at the PSDF". Paper presented at 31st International Technical Conference on Coal Utilization and Fuel Systems, Clearwater.

Weil, B.H. and Lane, J.C. (1949). *The Technology of the Fischer-Tropsch Process*. London: Constable.

Weissman, R., and Thone, P. (1995). "Gasification of solid, liquid and gaseous feedstocks: commercial portfolio of Texaco technology". Paper presented at IChemE Conference, "Gasification: An Alternative to Natural Gas", London.

Wellman (undated). *Gasification*. Company brochure, Oldbury: Wellman Process Engineering.

Wiegner, P., Martens, F., Uhlenberg, J. and Wolff, J. (2002). "Increased flexibility of Shell gasification plant". Paper presented at IChemE Conference "Gasification: The Clean Choice for Carbon Management", Noordwijk.

Wolff, J. (2007). "Shell water quench gasifier: SCGP for IGCC with CCS". Paper presented at IChemE Conference "Gasification: Effective Carbon Control", Antwerp.

Yu, Z., Zhou, Z. and Yu, G. (2007). "Opposed multi-burner gasification technology: seven new projects in China". Paper presented at Gasification Technologies Conference, San Francisco.

Zhou, Z., Yu, Z., Wang, F. and Gong, X. (2006). "Commercial applications of the opposed-multi burner gasification technology". Paper presented at Gasification Technologies Conference, Washington.

This page intentionally left blank

Chapter 6

Practical Issues

6.1 EFFECT OF PRESSURE

The effect of gasification pressure and temperature on gas composition, yield and cold gas efficiency was discussed in section 2.3.1. There are other aspects to consider, however, when deciding on the values of these parameters in a process, and these are discussed here.

Pressure

The pressure in a gasifier is generally based on the requirements of processes downstream of the gasifier. This requirement is easily met when the downstream process is a combined cycle (CC) that typically requires a pressure in the gasifier of 20–40 bar. Other processes, such as methanol or ammonia synthesis, require much higher pressures of 50–200 bar, and thus compression of the synthesis gas.

In principle, it looks more attractive to pressurize the feed to a gasifier than to pressurize the syngas. However, it should be realized that most of the advantages in terms of equipment compactness and lower compression energy are already obtained when gasifying at a pressure of 15–25 bar. Moreover, where the feedstock is a solid, such as coal or biomass, pressurizing becomes more and more complicated at higher pressures. With air-blown gasification, there is in principle less reason to prefer pressurization of the blast, since the savings on syngas compression are much less due to the large percentage of inerts in both the blast and the product gas.

For high-temperature entrained-flow gasifiers, this theoretical argument of pressurizing the blast components remains valid for quite high pressures of 100–150 bar because of the low methane content in the gas. For fluid-bed gasifiers that operate at much lower temperatures, the methane content in the gas at such high pressures would be unfavorable for non-fuel gas applications. In moving-bed gasifiers, the methane content is already high owing to the pyrolysis reactions. High pressures raise the methane

content further, to the extent of almost doubling it – as was demonstrated in the Ruhr 100 plant (see section 5.1.3). This may not be desirable for syngas applications, but for SNG production it reduces the load on the downstream plant considerably.

There are also a number of practical aspects to be reviewed when considering gasification at very high pressures, which also sometimes reduce the attractiveness of such a solution.

Compression of reactants

Large oxygen compressors are available for pressures up to 70 bar. Above this pressure oxygen is mostly pressurized by pumping liquid oxygen. This facilitates the pressurizing and reduces the energy for syngas compression. However, in the ASU more energy is required for compression, as the cold from the evaporation of the liquid oxygen now becomes available at a somewhat higher temperature. Overall, there may still be an advantage to gasifying at a pressure of, say, 100 bar.

Raising the pressure of heavy oil residues for gasification at 80 bar with plunger pumps is normal commercial practice in GE Energy plants, and pilot plants have operated at 100 bar. Coal-water slurries are also relatively easy to pump, although more difficult than a pure liquid. Gravity feed of lump coal through lock-hoppers to a moving-bed gasifier has been demonstrated at 100 bar (Lohmann and Langhoff, 1982). The situation is different for dry-coal feed systems relying on pneumatic conveying, as in entrained-flow systems or screw conveyors. For such systems, the maximum practical pressure is about 50 bar (see also section 6.2.1).

Compression of the moderator, which in virtually all cases is steam, is not a problem, as pumping water requires relatively little energy.

Equipment

All gasification reactors require some form of protection between the high-temperature reaction space and the outer pressure shell, which must be maintained at moderate temperatures of 200°C to 300°C. This protection either takes the form of a thick (50–70 cm) insulating refractory wall, or a membrane wall that in current designs is at least as "thick" because of the space required between the membrane wall and the pressure vessel wall. One of the potential advantages of gasifying at higher pressures is that the reactor volume and thus cost required for a given throughput decreases, particularly in fluid-bed and entrained-flow reactors, where the volume is determined by the gas phase. Since the volume taken up by the pressure shell protection system is virtually independent of the pressure, the economics of designs much above 30–40 bar tends to be confronted with diminishing returns in IGCC applications using coal as a feedstock. When the downstream application of the gas requires very high pressures, as has been the case in most heavy oil gasifiers where the gas is mostly used for ammonia or methanol synthesis, the combination of the savings in compression cost and the fact that oil is easy to pressurize outweighs the disadvantages of a somewhat higher cost reactor.

Side reactions

When looking at the possibilities of high-pressure gasification, it is important not to forget the effect of pressure on side reactions. When the feedstock contains iron or nickel (the latter being typical for refinery residues), the formation of carbonyls is favored by higher pressures and becomes significant at pressures over about 30 bar (see section 6.9.8). Although this is not an argument against higher pressure *per se*, it will cause additional expense in the gas clean-up.

Similarly, formation of formic acid in the liquid phase is favored by higher partial pressures of carbon monoxide. This will tend to lower the pH in water washes or process condensate, and at high pressures will need to be considered in the material selection.

6.2 PRESSURIZATION OF COAL

Pressurizing a solid material such as coal is a bit of a misnomer. It is in fact the transport of a solid from one environment to another environment with a higher pressure. Feeding coal or any other solid material into a space with a pressure of more than 5–10 bar is not an easy matter. Reimert (1981, 1986) has presented systematic reviews of systems that are available or under development. This has been identified as an area requiring additional research and development (Holt, 2001a; Clayton *et al.*, 2002). To date, two different approaches have been followed for pressurizing pulverized coal in coal gasification:

1. Lock-hoppering, or a sluicing system and using an inert gas as the continuous phase.
2. Pumping as a slurry with a piston pump with water as the continuous phase.

6.2.1 Dry-coal feeding with lock-hoppers

Lock-hoppers have been used for over a century in water gas reactors and in blast furnaces for sluicing lump coal, coke and iron ore into vessels that operated under a slight overpressure. They were developed further in the 1930s for operation at 25–30 bar in connection with the Lurgi pressurized moving-bed gasifier. In the Ruhr 100 pilot plant, they have been demonstrated at 100 bar (Reimert, 1986).

In general, a lock-hopper system consists of three vessels that are situated vertically above one other and separated from each other by valves (see Figure 6.1).

The top hopper is at atmospheric pressure, and the middle one is the actual lock-hopper. The bottom hopper can be a storage vessel that is at an elevated pressure, but can also be the gasifier itself, as is the case with moving-bed gasifiers. The principle is that of any sluicing system. During loading, the valve between the atmospheric hopper and the lock-hopper is open and the valve between the lock-hopper and the bottom hopper is closed. After the lock-hopper has been filled, the first

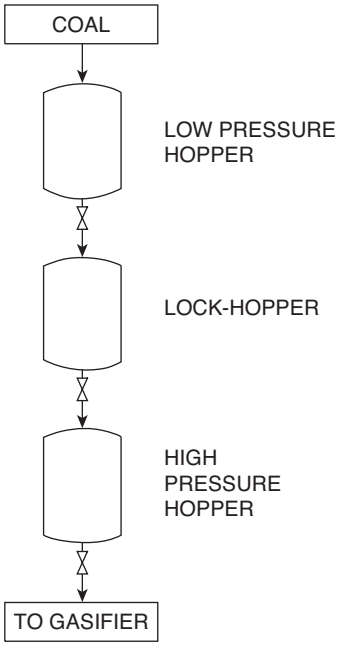

Figure 6.1 Lock hopper for dry feed.

valve is closed and the second opened, after which the pressure in the lock-hopper increases from atmospheric to the elevated pressure, and the solid material will drop into the bottom hopper. The valve between the lock-hopper and the bottom hopper is then closed, the gas in the lock-hopper depressurized, and the valve between the top hopper and the lock-hopper opened, after which the cycle can be repeated.

Adopting the lock-hopper system for pressurizing pulverized materials such as coal requires major modifications to the lock-hopper system. The solids, for example, must be kept fluidized during transport and in the hoppers. This requires providing the hoppers with spargers or other means for the introduction of the fluidizing gas. The dusty gases leaving the hoppers on depressurizing have to be cleaned and sometimes re-pressurized, which further complicates the lock-hopper system and makes it a costly piece of equipment. Finally, there is the drawback that lock-hoppers are discontinuous. This is not a problem for processes that have long residence times, such as a blast furnace or a moving-bed coal gasifier, but it is more problematic for entrained-flow gasifiers, which have residence times in the order of seconds. In the latter case, the pressurized hopper must be sized such that it is filled during the whole lock-hopper cycle so as to ensure a continuous flow of solids to the downstream equipment.

The use of lock-hoppers for coal pressurization presents a problem for dry-coal feed entrained-flow slagging gasifiers when pressures higher than 30–40 bar are

required. The problem is not limited to more complex equipment such as valves, fluidizing systems, and the compression of fluidizing gases. More important is that the gas consumption for fluidizing the pulverized coal in the pressurized hoppers becomes greater at higher pressures. Furthermore, the amount of gas required for the transport of the coal to the burners increases, creating a burden for the gasifier, as this gas has to be heated to the high gasification temperature.

Transport gases

Nitrogen. Using nitrogen as transport gas has the drawback that the product gas becomes contaminated, which is particularly relevant when the gas is to be used for chemical synthesis or for the production of hydrogen. The only chemical application where the presence of nitrogen does not pose a problem is ammonia synthesis. In IGCC power stations, the presence of nitrogen means that less nitrogen is available for syngas dilution, for example. However, in IGCC applications the presence of some inert material in the gas has hardly any effect on the overall process efficiency.

In IGCC applications, nitrogen is therefore the gas that is most commonly used in lock-hoppers and for the subsequent dense phase transport to the burners. The nitrogen is available from the air separation unit (ASU), which supplies the oxygen required for the gasification. It should be possible to get a loading during dense phase transport of 400 kg/actual m^3. In practice the loading is about 300 kg/actual m^3, as then the coal flows more smoothly. This implies that, when operating at a pressure of 30 bar and a temperature of about 90°C, for every kg of coal 0.09 kg nitrogen is required for transport. At a pressure of 70 bar, the latter figure would increase to 0.21 kg. The nitrogen (plus argon) percentages in the product gas correspond to 2.7 and 5.1 mol% for pressures of 30 and 70 bar respectively (see Table 6.1). The same percentage of 5 mol% nitrogen is obtained at 30 bar when the oxygen purity is reduced from 99 to 95 mol%. Although in IGCC applications the higher nitrogen content in the gas has only a marginal effect on the overall process efficiency, it does slightly increase the duty of the syngas cooler and of the gas treating.

For chemical applications, the higher inert content of the gas will cause a subsequent synthesis to run under less favorable conditions. In such a situation, if nitrogen is to be used as transport gas it is often more attractive to run the gasifier at a lower pressure and to increase the duty of the syngas or hydrogen compressor, which is in any case required in most such applications. Examples where this applies are methanol synthesis and hydrocrackers.

Carbon dioxide. The use of CO_2 as transport gas is only a serious option where it is available at no additional cost – that is, where a CO shift and subsequent CO_2 removal is anyway part of the downstream gas processing. For many chemical applications, such as hydrogen or methanol production, this is the case, and there are examples of such plants where using CO_2 as transport gas is practiced. If CO_2 capture and sequestration becomes a requirement for power production, it would

Table 6.1
Influence of the coal transport medium, pressure and oxygen purity on the syngas purity

Process	Single-stage slurry feed	Single-stage dry feed						
Temp. (°C)	**1500**	**1500**		**1500**		**1500**		
Press (bar)	70	30	70	30	70	30	70	30
Coal transport medium	Water	CO_2	CO_2	Syngas	Syngas	N_2	N_2	N_2
CGE (%)	65	82	82	82	82	82	82	82
IGCC efficiency (%)	38	50	50	50	50	50	50	50
O_2 (mol%)	99	99	99	99	99	99	99	95
Wet raw product gas (mol%)								
CO_2	6.0	2.0	4.7	1.0	1.0	1.0	1.0	1.0
CO	37.4	64.5	62.9	63.2	63.5	61.9	60.6	60.8
H_2	15.4	31.9	30.3	32.8	32.4	32.2	31.0	31.3
CH_4	0.0	0.2	0.5	0.0	0.1	0.0	0.1	0.0
N_2 + Ar	0.7	0.9	0.9	0.8	0.8	2.7	5.1	4.7
H_2S	0.2	0.3	0.3	0.3	0.3	0.3	0.3	0.3
H_2O	40.3	0.2	0.4	1.9	1.9	1.9	1.9	1.9
Dry raw product gas (mol%)								
CO_2	10.1	2.0	4.7	1.0	1.0	1.0	1.0	1.0
CO	62.6	64.6	63.2	64.4	64.8	63.2	61.9	62.1
H_2	25.8	32.0	30.4	33.5	33.0	32.8	31.6	31.9
CH_4	0.0	0.2	0.5	0.0	0.1	0.0	0.1	0.0
N_2 + Ar	1.2	0.9	0.9	0.8	0.8	2.7	5.1	4.7
H_2S	0.3	0.3	0.3	0.3	0.3	0.3	0.3	0.3
H_2/CO molar ratio	0.41	0.50	0.48	0.52	0.51	0.52	0.51	0.51
CO_2/H_2S molar ratio	34	7	16	3.3	3.3	3.3	3.3	3.3

Note: The IGCC efficiencies are calculated on the basis of the standardized, idealized conditions of Appendix E.

also be the case for IGCC applications. The effect of CO_2 on process efficiency and the syngas cooler duty is only marginally different from that of nitrogen, provided the pressures and temperatures are the same (see Table 6.1). The H_2/CO ratio of the syngas may decrease slightly, but this would generally have little influence on subsequent gas processing. The effect of the H_2S/CO_2 ratio on the acid gas removal system will be discussed in Chapter 8.

The major advantage of CO_2 over nitrogen as transport gas is that it does not dilute the gas with additional inerts. It has the advantage over syngas as a transport gas in that it is not toxic and it slightly reduces the process steam requirements.

Syngas. Using syngas for the dense phase transport of pulverized coal to the gasifier instead of nitrogen largely reduces the problem of nitrogen contamination. Where a gas quench is used, as is currently the case in the SCGP gasifier, the syngas can best be taken from the discharge of the recycle gas compressor. Nevertheless, the use of syngas for transport of coal is in most cases not an attractive solution, although the nitrogen contamination of the gas is typically reduced from 3–5 mol% to less than 1 mol% (see Table 6.1). The problem with syngas as a transport gas is that, in the lock-hoppers, the gas also has the function of providing a barrier between the oxidizing atmosphere of the atmospheric pressure coal and the reducing atmosphere of the gasifier, a function that syngas cannot fulfill. The obvious choice for the barrier function is nitrogen. It is inevitable, therefore, that the transport syngas will always be contaminated with some nitrogen. All in all, syngas is not an attractive option, and in practice the only practical alternatives are nitrogen and CO_2.

The effect of syngas on process efficiency and the syngas cooler duty is the same as for nitrogen, provided the pressures and temperatures are similar (see Table 6.1).

Depressurizing

Although the most complex lock-hoppers are required for pulverized coal, they are often also used for the discharge of fly slag that is separated in cyclones and or filters downstream of the gasifier. Lock-hoppers in which the continuous phase is a liquid are used in some gasifiers for sluicing the slag out of the gasifier (see also section 6.2.3).

6.2.2 Pumping coal as a coal-water slurry

Pumping coal as a slurry is, in principle and in practice, a more elegant route to coal pressurization than lock-hoppering. In water, coal concentrations of 60–70 wt% can be used. The most important benefit of slurry-feeding is the ability to operate the gasifier at higher pressures than would be the case with a dry-feed operation. Commercial operations in ammonia plant service are known at 65 bar.

A drawback is that only a small part of the water is required for the gasification, and the majority just constitutes a burden, as it has to be vaporized and heated to 1500°C. This in turn implies that the oxygen consumption is much higher than for dry-coal feed systems and that the CGE is substantially lower. For IGCC applications, this inevitably results in a lower station efficiency (50% and 38%; see Table 6.1).

This disadvantage makes itself felt particularly strongly when working with low-rank coals. A sub-bituminous coal with, say, 30% moisture still requires 30–40% liquid water to make the slurry, since the inherent moisture in the coal does not make any contribution to the transport properties of the slurry. The result is that the actual feed to the gasifier is nearly 50% water. With lignites, the figures are even more extreme. While feeding a mixture containing 50% or more H_2O to the gasifier may be technically feasible, the loss of efficiency is such that it is generally economically unattractive. Where the gasifier has a second stage to boost the efficiency, this situation is not quite so bad – as exemplified by the E-Gas unit at Plaquemine, which operated on Powder River Basin sub-bituminous coal for several years.

Extreme slurry preheat

In order to compensate for virtually all drawbacks of using water as a slurry medium, the merits of substantially preheating the slurry have been investigated.

Preheating has the following advantages:

- The water has to be heated less in the reactor, and the heat of evaporation becomes lower at higher temperatures (see Figure 6.2(b)).
- Atomization becomes better with hotter liquid containing feedstocks, increasing the accessibility of the coal for gaseous reactants, especially when the feedstock slurry is preheated such that the carrier flashes upon introduction into the gasification reactor. Also, the reduction in surface tension of the carrier liquid at higher temperatures enhances the atomization. The risk of rogue water droplets passing practically through the reactor completely is minimized (Bockelie *et al.*, 2002).
- More reactor space becomes available for the gasification *per se*, which will increase the carbon conversion.
- The oxygen consumption will decrease and the cold gas efficiency will increase.
- The water will expand (see Figure 6.2(a)), resulting in a lower water requirement to maintain good slurry conditions. To exploit this phenomenon to the fullest, use can be made of a circulating hot coal slurry at high pressure, in which the relatively cold slurry leaving the slurry pump is blended.

If the water is preheated to close to its critical point (see Figure 6.2(b)), the above effects will be most pronounced and the heat of evaporation is then minimized. Furthermore, not only the water but also the coal is preheated to above 300°C – a feature that is not possible with gasifiers using dry-coal feeding, because there the coal particles will become sticky, which will interfere with the fluidization (Holt, 2001b).

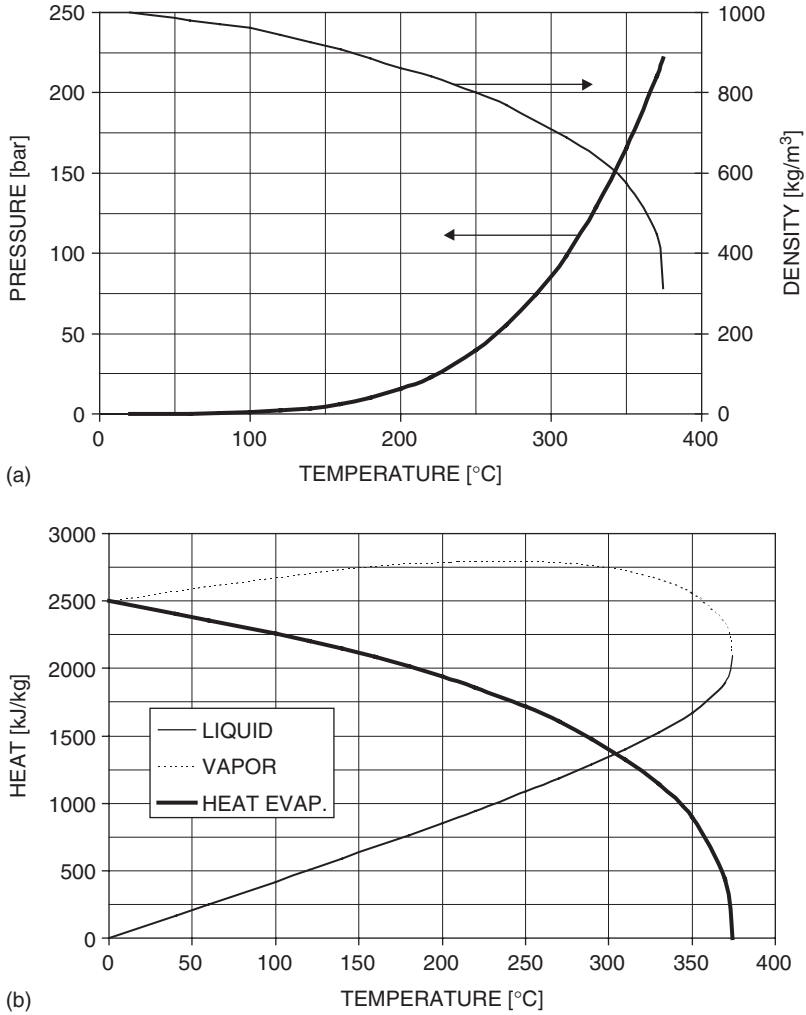

Figure 6.2 (a) and (b) Properties of water for extreme preheat.

Where higher preheat temperatures can be accomplished in practice, the IGCC efficiency of a slurry feed process is almost equal to that of a dry-coal feed gasifier (49 and 50% respectively; see Table 5.10).

As shown in Table 5.10, extreme coal-water slurry preheat is far more effective to increase the IGCC efficiency of a gasifier than adding a second stage to a dry-feed gasifier. The reason is that the efficiency of the state-of-the-art single-stage slurry-feed gasifier is lower to start with than a dry-feed gasifier (38 and 50% respectively; see Table 5.10), and it is much easier to improve the efficiency from a low level of 38% than from a level of 50%. Adding a second stage to a dry-feed

gasifier increases the efficiency by only 1–2%. The main reason for this low increase is that, for thermodynamic reasons, only part of the steam injected into the second stage is converted; the remainder just adds burden to the gasifier. Moreover, the syngas cooler duty is decreased as the outlet of the gasifier drops from 1500 to 1100°C. These disadvantages in large part outweigh the advantage of the lower oxygen consumption. By combining the ability of a slurry-feed process to operate at higher pressures of, say, 70–100 bar with high-temperature slurry preheating, additional efficiency gains can be made by using a fuel gas expander in the solids-free gas.

Supercritical CO_2 slurries

A further proposal for reducing the efficiency disadvantages of slurry-feed systems is the use of supercritical CO_2 as transport medium (Holt, 2001b).

6.2.3 Solids pumping

Various other types of equipment have been developed for pressurizing pulverized coal, of which examples include piston pump paste systems and the Stamet "solids pump" (Chambert, 1993; O'Keefe, 1994). Development of the latter is now sufficiently advanced that it could find its way into commercial service in the foreseeable future.

The Stamet pump operates with a single rotating element, which provides for both movement and sealing between the low-pressure and high-pressure environments. The rotating "spool" comprises two discs mounted on a shaft, which rotates within a housing. Material entering the pump becomes locked or bridged between the discs and is carried round by their rotation. An "abutment" forces material from between the discs out of the pump into the high-pressure space through the discharge nozzle (Saunders *et al.*, 2006).

There is extensive commercial experience with this machine as a low-pressure feeder, with both pulverized coal and other materials at feed rates between 10 and 700 tonnes per hour. Development work has been focused on adapting the existing technology to be able to feed against current gasifier pressures. Successful pilot plant operation, with a range of coals from bituminous to lignite and including a coal/biomass mixture, has been achieved at 34 bar. Work is continuing to take this to 70 bar.

Economic studies have shown that significant savings can be achieved with such a machine, which include a reduction in vertical height of the feed system as well as in make-up gas for lock-hoppers. The Stamet company has recently been acquired by GE Energy.

A similar "dry solids extrusion pump" is under development as part of the Pratt & Whitney Rocketdyne technology (Sprouse *et al.*, 2007).

6.2.4 Wet lock-hoppers

Slag discharge

The only place where wet lock-hoppering is currently practiced is in the discharge of the slag-water slurry from the gasifier in some gasifiers. In this situation a number of other issues have to be addressed, in particular that the water entering the lock-hopper with the slag from the gasifier is hot and contains dissolved gases such as H_2S. Flushing the lock-hopper with clean, cold water before opening to atmosphere must be incorporated into the cycle to prevent steam flashing and gas release.

Another feature which could be incorporated in all slagging processes, but is not practiced commercially, is a boiling-water slag bath where the steam generated can be used, for example, as process steam or as a quench medium. Under these circumstances this could reduce the amount of dissolved gases in the slag discharge water.

Coal feeding

In principle, it is possible to pressurize coal slurries making use of lock-hoppers. It offers certain advantages over piston pumps for pressurizing coal-water slurries. Valves for this service that are required in both lock-hoppers and piston pumps are much less of a problem. Moreover, thicker slurries can be transported in lock-hoppers. Before reaching the burners, this thick slurry (paste) will become more dilute due to the expansion of the water.

The slurry is fed to the lock-hopper with an open top valve and closed bottom valve (see Figure 6.3). Subsequently, the top valve is closed and the lock-hopper is pressurized by opening a valve in a gas line between the high-pressure space and the top of the lock-hopper. The bottom valve of the lock-hopper is then opened and the slurry leaves the lock-hopper, flowing into the high-pressure system. The bottom valve of the lock-hopper is then closed and a second valve in the bottom of the lock-hopper is opened, through which water is admitted that pushes the gas in the lock-hopper back into the high-pressure space. All valves are closed, and the top valve of the lock-hopper is then opened, thereby depressurizing the lock-hopper. The water is drained from the lock-hopper through a valve in the bottom of the hopper, after which the cycle is repeated.

In principle it is possible to pressurize the slurry to 200 bar, which enables subsequent preheating to about 350°C without steam formation. This requires a high-pressure lock-hopper, but the temperatures in this hopper are below 100°C, so low alloy steels can be used.

Almost the same system can be used for pressurizing dry lump coal. After the lock-hopper has been filled with water to push out the syngas in the hopper, all valves are closed and the valve in the water drain is opened, thereby depressurizing the lock-hopper. After draining the water, the valve in the drain is closed and the cycle is repeated.

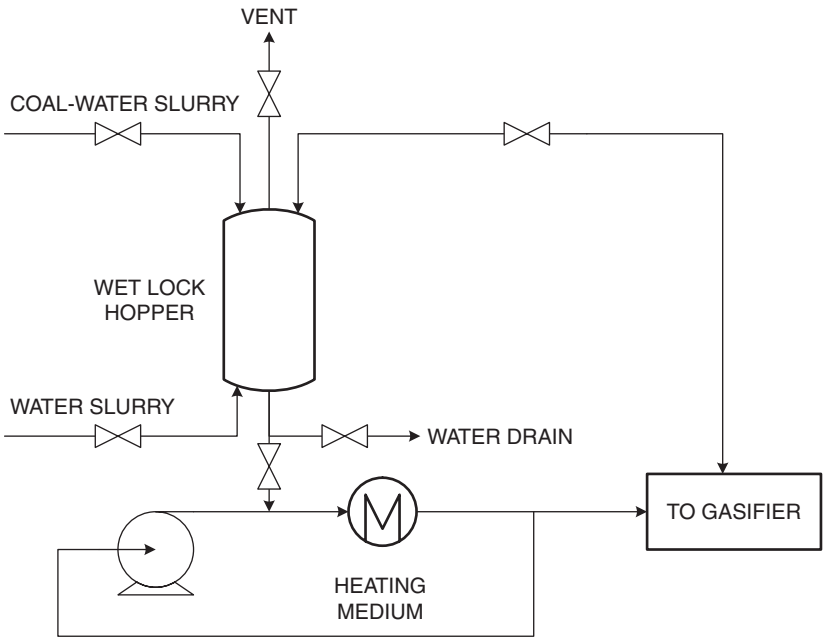

Figure 6.3 Wet lock-hopper system with heating circuit.

6.2.5 Tall hoppers for pressurizing

Another option is to feed the coal via so-called dynamic hoppers (see Figure 6.4) (Visconty, 1956). Pulverized coal is fed to the top of a tall hopper and flows down through the hopper to a vessel that is pressurized (see Figure 6.4). The height of the coal column in the hopper should be such that the pressure in the vessel is less than or equal to the static height of the column. Moreover, the downward velocity of the coal should be higher than or equal to the velocity of the gas from the pressurized vessel that would tend to migrate through the interstices between the coal particles to the lower pressure space at the top of the column. Otherwise the gas has a chance to expand and the coal column would be blown out of the hopper. The relevant formulae are:

$$\Delta p < \rho \cdot g \cdot h$$

and

$$v_{coal} \geq \overline{v} = \frac{\Delta p \cdot \varepsilon^2}{5 \cdot h \cdot \eta \cdot S^2}$$

where Δp is the pressure required to overcome the difference between, for example, the pressure in the gasifier and the atmospheric pressure. The bulk density of the

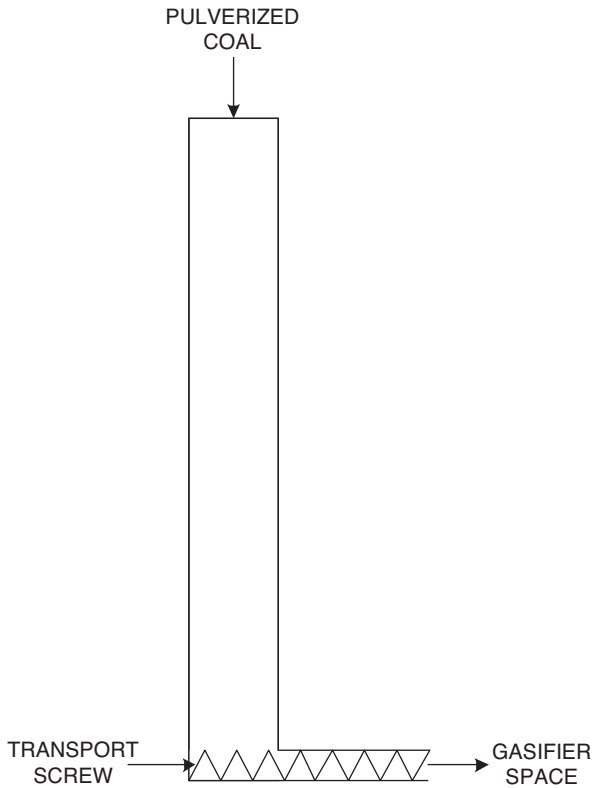

Figure 6.4 Tall hopper feeding device.

coal is ρ, the acceleration due to gravity is g, the height of the column filling the tall hopper is h, the average vertical velocity of the gas in the interstices is v, the dynamic viscosity of the gas η, the specific surface area of the pulverized coal is S and the porosity of the coal/gas mixture in the column is ε. The "5" is an empirical constant.

Taking SI units and the bulk density of coal as 1000 kg/m^3, the minimum height of the hopper to overcome a pressure difference of 10 bar (=10^6 Pascal) is 100 m. Taking h = 100 m, η as 1.5×10^{-6} kg/s·m, S as 40,000 m^2/m^3 and ε as 0.4, this results in v_{coal} = 0.13 m/s. This means that for a 2000 t/d = 0.023 m^3/s coal gasifier, the hopper should have an internal cross-section of 0.023/0.13 = 0.18 m^2, i.e. 500 mm diameter.

The calculation shows that such bunkers are very thin and could advantageously be located near, or rather be incorporated in, a tall structure such as a stack. The coal can be transported to the top of the bunker either pneumatically or by mechanical means.

A problem with the use of tall hoppers is that the maximum pressure that can be obtained in a one-stage operation is about 20 bar, and even then a 200 m high

structure is required. Proposals have been made to build them as a multistage stage machine in which much higher pressures can be reached. Were a 200 m structure to be built, a pressure of 40 bar could be reached with a two-stage operation. This would be sufficient for most applications (van der Burgt, 1983).

Hang-ups in the hopper are not so likely to occur, as it will operate near the point of incipient fluidization. Moreover, they can be avoided by building a hopper with an annular cross-section where the center part is turning very slowly to avoid any bridging or blocking. The use of a small amount of inert gas in the column is probably mandatory.

The principle of these hoppers is the same as that of centrifugal devices that have been proposed (van der Burgt, 1978; 1982). The difference is that instead of the centrifugal field, the gravitational field is used. In all these dynamic hoppers there will be hardly any contamination with the gas at the top of the hopper.

6.2.6 Atmospheric operation

One conclusion to be drawn from the whole discussion of pressurizing coal is that it is not easy, and there is a permanent concern regarding availability. This has led some to question the wisdom of trying, and to propose an advanced atmospheric process as a preferred development route (Davey *et al.*, 1998). The economics of such an approach is discussed in Chapter 9.

6.3 COAL SIZING AND DRYING

6.3.1 Coal sizing

Coal preparation before gasification always involves some form of sizing of the coal.

For moving-bed gasifiers, this could be restricted to crushing of the coal followed by sieving out the lumps required for gasification. A separate drying step is not required for moving-bed gasifiers as the drying takes place in the gasifier itself, using the lowest level sensible heat in the product gas.

For the finer-sized coals or petcoke, it is essential for dry-coal feed entrained-flow gasifiers that the feed is dry before entering the ring-roller mill that is usually used for the grinding. The drier is integrated with the mill in a recycle loop that is directly heated with a gas burner, as used in conventional pulverized coal (PC) boilers. For details, the reader is referred to the literature in this field (Perry and Chilton, 1973: 8–16; Stultz and Kitto, 1992). The gas that dries the coal is part of the same loop that also classifies the coal particles leaving the mill. For fluid-bed gasifiers drying is not always essential, and more diverse grinding machines are used that depend on the feedstock and the particle size required.

For coal-water slurry feed gasifiers, driers are not required, and size reduction is an integral part of the slurry preparation. Generally rod mills, but sometimes ball mills, are used.

6.3.2 Coal drying

Dry-feed systems require dry coal for two reasons. Initially, a decision to use a dry-feed system is driven by the high efficiency such a system brings. Having made that decision for an entrained-flow process, the degree of drying required is determined by the demands of the pneumatic conveying system used to transport the pulverized coal to the burner.

When working with bituminous coals, the drying can usually be integrated with the milling. In some sub-bituminous coals and in lignites there is too much water to be able to dry the feedstock this way, and a separate drying stage is required. It is not necessary to dry the fuel completely, but only to reduce the moisture content to well below the level of inherent moisture. The resulting fuel is sufficiently dry to permit pneumatic transport without any risk of agglomeration or clogging. Zuideveld (2005) has suggested 12% residual moisture for a lignite and 6% for a sub-bituminous coal.

Conventional drying processes are thermally based, and typically use natural gas as a fuel. For coal gasifiers this is equivalent to using clean gas to dry the coal, and hence a prime product is used for drying the feed. Exergetically this is not attractive, as it lowers the overall energy efficiency. Therefore, for drying the coal it is better to use waste heat of an appropriate low temperature level.

One method of using low-level heat for feed drying is the WTA process, developed by the German utility RWE specifically for its lignite-fired PC power plants. It uses mechanical vapor compression to recover the latent heat of the moisture driven off to reduce the thermal requirement for drying (Renzenbrink *et al.*, 2007) (see Figure 6.5). Zuideveld (2005) states that when using the WTA system to dry a lignite feedstock to a Shell gasifier, the steam demand for drying is reduced from 1.2 to 0.17 t/t feed compared with conventional technologies, at the expense of the power demand increasing from 17 to 85 kWh/t. The pilot plant in Frechen operates with 720 t/d in the fine grain mode. A commercial-scale unit is planned to go on stream in 2008.

In an IGCC scheme, the most logical solution would be to dry the feed in direct contact with the warm exhaust gas from the Heat Recovery Steam Generator (HRSG) of the gas turbine. In this manner, low-level heat is used for the drying. However, the exhaust gases from all present gas turbines contain about 15 mol% oxygen, which introduces the danger of spontaneous combustion in the dryer. Recycling flue gas back to the compressor inlet to replace part of the large excess air flow, as discussed in section 7.3.4, would reduce the oxygen content to 3.5 mol% and would eliminate this problem. The dried coal would then still require a separate coal pressurizing system.

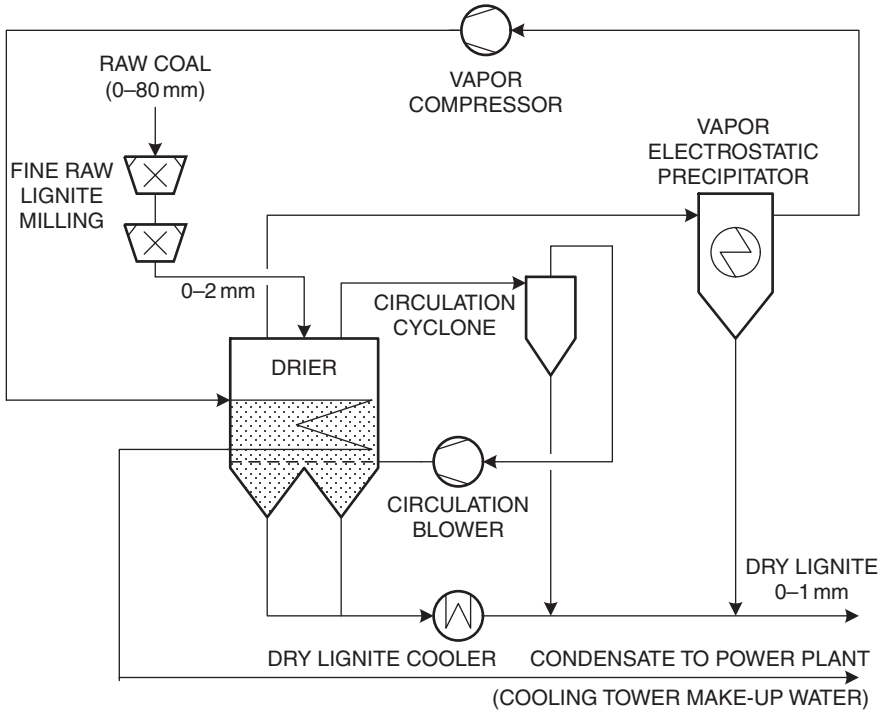

Figure 6.5 WTA lignite drying unit (source: Renzenbrink *et al.*, 2007).

For low-rank coals, an alternative drying method is the injection of pressurized coal into the hot gas leaving the gasifier, as practiced in the HRL process described in Chapter 5. The advantage of this drying method over the indirect drying of brown coal is that no separate drier or syngas cooler are required. This translates into a considerable capital reduction. From the point of view of exergy it is less attractive, because high-level heat is used for a duty where low-level heat would suffice.

Using coal-water slurries eliminates the problem of drying the coal. By injection of the coal as a coal-water slurry into the hot gas leaving the gasifier, use can be made of waste heat in the fuel gas to evaporate the water from the coal, while still allowing the use of the more elegant coal-slurry pump for pressurizing. This principle is used, for example, in the E-Gas process (see section 5.3.5). The problem remains, though, that drying with such hot gases always introduces the risk of some tar formation, and one of the advantages of entrained-flow slagging gasifiers is that no tars are formed in the gasifier proper. Although better than using clean syngas or natural gas for drying, using such high-temperature sensible heat for drying is also exergetically not attractive.

6.4 REACTOR DESIGN

6.4.1 Reactor embodiment

Gasification reactors vary from process to process. At a first glance the moving-bed processes may look like a simple stove, but they are in fact mechanically often the most complicated. This complexity is either due to the presence of stirrers in the top of the reactor or to the presence of a rotating ash grate in the bottom of the reactor – as, for example, in the Lurgi dry-ash gasifier (see Figure 5.1). In the BGL slagging gasifier, the rotating ash grate is absent and the ash is present as a molten slag.

With fluid beds, the complexity lies in the fluidization. For the remainder, these reactors are relatively simple. The main advantage is that temperatures are below the ash melting point, and pressures are also lower than in most other processes. Insulating refractory lining is used to protect the reactor pressure shell from high temperatures.

Most complex are the reactors of entrained-flow slagging gasifiers. The containment of both the high temperatures of 1400–1700°C in combination with pressures of 30–70 bar is not easy. The wall construction will be discussed in section 6.4.2.

The simplest and lowest first-cost construction is a refractory brick-lined reactor. In the case of top-fired single-stage gasifiers, the reactor consists of a simple cylindrical vessel with, in principle, a hole in the top for the burner to supply the feedstocks, and a central outlet in the bottom for both the product gas and the slag. The reactor has only one burner, which has the advantage of a simple construction and a simple control system. Also, having one outlet for both the product gas and the slag is an advantage, as the chance of plugging the slag tap or the gas outlet is virtually absent even in small-capacity gasifiers. Last but not least, the construction is completely axisymmetrical, which makes it elegant and relatively low cost.

An additional advantage of an insulating brick-wall reactor, which has been used for decades in all oil gasifiers, is that in contrast to a membrane wall the brick lining has a large heat capacity. Therefore, no extra wall penetrations are required for an ignition burner. The heat-up facility can be integrated into the main burner. The reactor and the hot-face brickwork are heated first with a start-up burner, after which the start-up burner is replaced with the coal or oil burner and the reactor is (partly) pressurized. Ignition of the flame follows immediately after introduction of the reactants to the hot brick wall, after which the final reactor conditions are obtained.

Up-flow slagging entrained-flow processes provide separate outlets for the gas at the top of the reactor and for slag at the bottom. The burners are located in the cylindrical wall of the reactor near the bottom (see Figure 5.16). This construction is more complex than the simple cylindrical reactors. Wall penetrations are numerous, as these gasifiers feature at least two (E-Gas), four (Shell) or more (Koppers-Totzek) burners, and a complex system is required for the ignition burner.

6.4.2 Reactor containment and heat loss

Gasification is a process that is carried out under harsh conditions. Even in a steam methane reforming furnace where the feedstock, natural gas, is clean and the use of catalysts allows syngas generation at 850–900°C, special alloys are required to work at their limit. In a gasification reactor the temperatures can be much higher – up to 1500–1600°C – making the environment subject to chemical attack from slag, and the pressures are often higher.

Refractory linings

The simplest and lowest-cost design of a reactor wall is a lining with a refractory capable of withstanding the prevailing temperature and chemical conditions.

Refractory lining is used universally for partial oxidation of petroleum residues and natural gas. Typically the design consists of three layers, as shown on the left in Figure 6.6. The inner "hot face" layer is a high-quality corundum brick (>99% Al_2O_3) suitable for temperatures up to about 1600°C. The intermediate layer is a castable bubble alumina, and the outer "cold face" is a silica firebrick with good insulation properties. This three-layer design combines the properties of high temperature-resistance and good insulation. At the same time, it hinders the propagation of cracks that may arise in the hot face through to the vessel shell. The design is selected to ensure that no condensation takes place on the inner wall of the steel shell, which would, for a pressurized reactor, typically have an operating temperature somewhere between 200 and 300°C. In locations with extremes of temperature, this

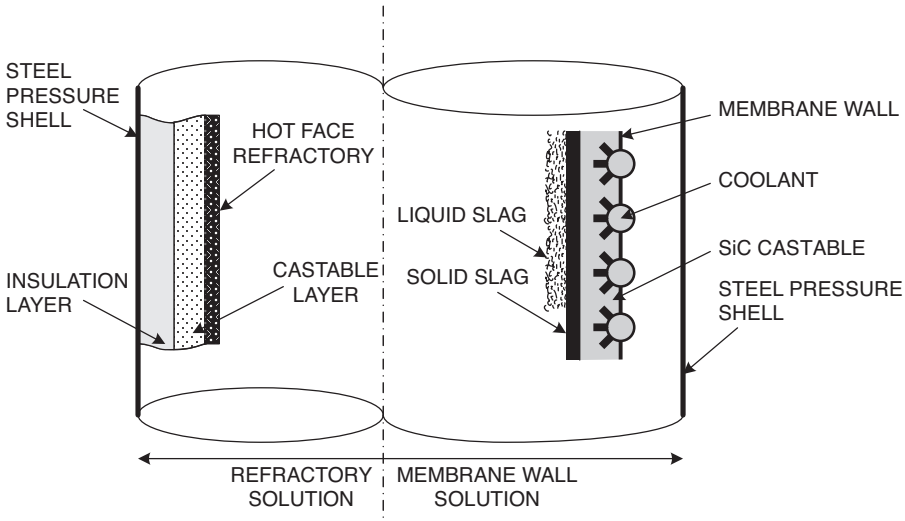

Figure 6.6 Refractory lining and membrane walls (source: BBP, 2001).

requires care to ensure that the wall temperature does not fall below the dewpoint of the synthesis gas in a cold winter wind, but the maximum allowable wall temperature is not exceeded in summer.

In oil service, the principle source of chemical attack is from the vanadium content in the feedstock. In normal operation this is not a major concern, since in the reducing atmosphere the vanadium is present as V_2O_3. Care must be exercised, however, during start-up or shutdown to avoid significant quantities of V_2O_5 being formed, since at temperatures above 700°C this is liquid and penetrates the refractory very quickly, causing a breakdown of the bonding matrix. With suitable operating procedures, refractory lifetimes of between 25,000 and 40,000 hours are possible.

For coal, however, the nature of the ash creates a very different situation. The large quantities of silica in most coal ashes would break down an Al_2O_3 hot face in a very short time (weeks rather than months). In addition to chemical attack, the refractory is also subject to erosion by the liquid slag flowing down the wall, although this only makes a minor contribution to the refractory wear. The solution currently employed is to use chromium oxide and/or zirconium oxide-based refractories, which have a better chemical resistance to the specific atmosphere prevailing. Nonetheless, this still cannot be considered satisfactory. Lifetimes of 6–18 months are reported (Clayton *et al.*, 2002). Considering that replacement of a refractory lining requires 3–4 weeks offline, a 25,000 hour life as with oil gasifiers is a long-term development objective. A problem with all hot-face bricks is that, for corrosion and erosion reasons, these fusion cast materials should ideally be mono-crystalline, but because of thermal requirements during start-up and shut down, poly-crystalline materials have to be used. The latter materials are less corrosion- and erosion-resistant at the crystal boundaries, but have the advantage that they are more resistant to spalling.

Research into improved linings is being conducted, as described by Dogan *et al.* (2002). In this paper, the authors describe the mechanism of liquid and vapor-phase penetration of silica, calcium oxide and alumina into the matrix of the refractory. Subsurface swelling occurs and subsequent cracks develop parallel to and about 1–2 cm below the surface of the brick. While these cracks are developing, wear rates of about 0.003–0.005 mm/h can be expected, but when the cracks reach the edge of a brick, then there is a sudden loss of the whole material in front of the crack. The authors then describe the development of a phosphated chromium oxide refractory with better resistance to liquid penetration. Field trials have been conducted and indicate an improved spalling resistance (Bennett *et al.*, 2007).

Fluid-bed coal gasifiers also have an insulating brick wall comprising dense erosion-resistant bricks and insulating bricks. Temperatures can be as high as 1150°C. Although there is no liquid slag present, there is mechanical erosion from the ash, limestone (for sulfur removal in some reactors), and sometimes the heat carrier, which are circulated at high velocities in these gasifiers. The shape of the CFB and transport gasifiers is more complex (see section 5.2), and the construction in general and the domed and vaulted "roofs" of large atmospheric units in particular must be designed so as to

keep their integrity over the whole temperature range, from ambient to the gasification temperature.

Biomass gasification, which is virtually always carried out in a fluid bed, often in the presence of sand as a heat carrier, is performed at the lowest temperatures. This low temperature of 900–1050°C is often determined by the ash quality of the biomass rather than by the intrinsic reactivity towards gasification *per se*. Biomass ashes have relatively low softening and melting points, and when molten are extremely aggressive in terms of corrosion owing to the high salt content.

Membrane walls

The alternative to refractory linings is a water-cooled membrane wall construction such as that shown on the right in Figure 6.6. The design shown is that of the Siemens reactor, but it is typical also of other entrained-flow slagging gasifiers such as SCGP and Prenflo.

The membrane wall consists essentially of high-pressure tubes, in which steam is generated, connected by flat steel bridges of which the width is about equal to the outer diameter of the tubes. Tubes and bridges are welded together into a gas-tight wall. The tubes are provided with studs that act as anchors for a thin layer of castable refractory, usually silicon carbide. During operation of the gasifier the castable will ideally be covered by a layer of solid slag, over which the liquid slag will run to the bottom of the reactor (see right in Figure 6.6). In principle the castable is not required, as it mainly acts as a "primer" to which the slag can adhere. There is a chance, though, that without this primer the coverage of the tube wall with slag may be erratic. In the ideal situation, the first liquid slag hitting the wall solidifies and forms a layer of solid slag on the castable. The elegance of a membrane wall is that the liquid slag then only comes in contact with solid slag and hence no corrosion/erosion of the reactor wall takes place. Small temperature excursions will cause the boundary between solid and liquid slag to move a little, but in principle the solid slag layer seals the whole wall. Such a wall is self-repairing. Hence the membrane wall is very robust and has a long life. Service lives of 8–10 years without damage have been reported, and lifetimes of about 20 years are predicted.

One drawback is that the heat loss through the reactor amounts to 2–4% of the heating value of the coal, whereas with an insulating brick wall this heat loss is less than 1%. In case of a membrane wall, the heat loss is mainly determined by the radiant heat of the reactants and the total surface area of the gasifier.

Another drawback is the high cost of a membrane wall. The wall itself is already expensive, but for constructional and/or maintenance reasons these reactors are sometimes built with a space between the membrane and the steel outer shell of the reactor, and therefore the cost of penetrations for burners and instruments is also high. This space must also have an open connection with the gasification space, as the membrane wall is not built to stand pressure differences across the wall.

For control purposes, it is a great help if the steam production of the membrane wall can be accurately measured, as the heat loss through the wall will then be known. This heat loss is an important variable in reactor simulations, and therefore for reactor control. Moreover, the steam make is an important indicator for the reactor temperature. Its accuracy as a temperature measurement is, however, influenced by the state of the refractory/slag covering of the wall.

Jacket construction

The use of a steam-generating water jacket is a well-proven solution in the context of the Lurgi dry bottom gasifier and the Koppers-Totzek gasifier. The Siemens technology also uses a jacket for applications with low ash feedstocks (Schingnitz *et al.*, 2000). Internal jackets are an elegant and low-cost solution for protecting the pressure shell from high temperatures. The space within the jacket should be in open communication with the gasifier proper, as the internal wall of the jacket cannot withstand large pressure differences. This (steam) connection may be located well downstream of the gasifier. Advantageously, the connection is, for example, made before a CO shift, if synthesis gas is being produced, or after the gas cleaning section if the gasifier is part of an IGCC. The steam from the jacket can also be used as (part of) the quench gas. For slagging gasifiers, the hot inner wall of the jacket has to be protected at the gas side with a castable that must be anchored with studs.

The quality of the steam produced in a jacket is rather low, as the pressure of the saturated steam has to be equal to the pressure in the reactor, whereas in the tubes of a membrane wall, saturated steam of 100 bar can be produced. However, the jacket construction is not only lower in cost (not least because the vessel diameter can be up to a meter smaller), but also wall penetrations for such things as burners and instruments are simpler than for reactors with a membrane or an insulating brick wall, because the jacket wall is only 10–15 cm thick instead of 60–70 cm.

Heat loss calculations at a membrane wall

Heat losses through a brick-lined reactor wall can be calculated easily. This is not the case for a membrane or jacket wall, where liquid and solid slag layers cover the wall (Reid and Cohen, 1944). The companion website includes a program to calculate the heat loss through all types of vertical reactor wall.

In the calculations, steady-state conditions have been assumed where the heat is flowing in a horizontal direction. The latter assumption is approximately correct, as the vertical heat flow is virtually limited to the flow of sensible heat contained in the liquid slag flowing down the vertical wall. In the calculations it has been further assumed that both the slag and the castable have a fixed melting point rather than a melting range. When the proper data are used, good approximations can be obtained. For details about the calculation methods used in the program, the reader is referred to the help files associated with the program on the website.

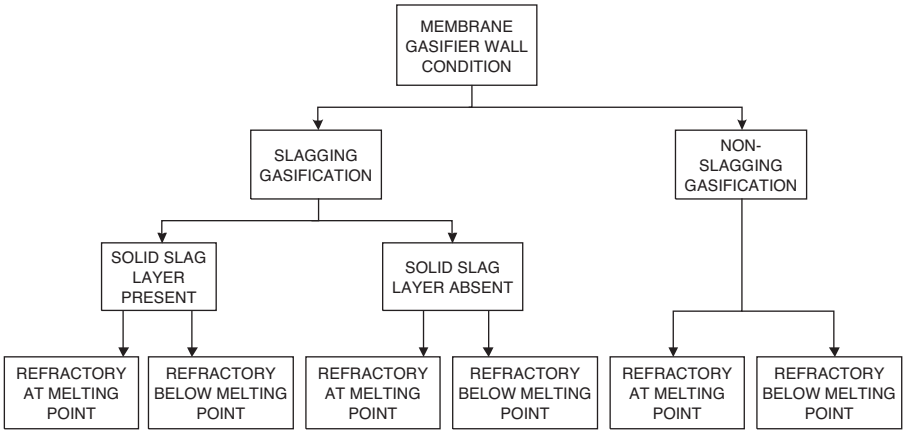

Figure 6.7 Conditions of a membrane wall.

Six different situations on a membrane wall may be distinguished, and these are illustrated in Figure 6.7. Some of the conclusions of the calculations made with the computer program are discussed in the following:

1. Conditions where the refractory is at its melting point or can react with gaseous components should be avoided at all times, as the solid slag will then not adhere to it and its function as a "primer" for the subsequent slag coat is then lost. Most important for a membrane wall is that the whole wall of the reactor is covered with solid slag. Without such a slag layer the wall will have a large heat loss, as the membrane is only protected by a thin layer of castable that has a relatively high heat conductivity owing to the use of SiC and the steel studs by which it is anchored to the membrane wall.
2. The above has consequences for the gasifier start-up procedure and operation if coal with a very high ash melting point of, for example, 1650°C is used. The reactor must be started with a temperature well above the 1500°C required for gasification and maintained there until the wall has been covered with a slag layer. This results temporarily in a less favorable set of reaction conditions – a higher oxygen consumption and a lower CGE and/or gas make. Once the slag layer has been built up, the temperature may be lowered and the operation will become non-slagging. Although this may result in a lower heat loss, the advantage of a slagging gasifier that most of the ash in the coal is turned into inert slag is lost. For this reason, it is more attractive to add flux to the coal in order to lower the ash melting point and ensure a continuous slagging operation.

   The use of a thicker layer of castable on the membrane wall is not an alternative to using a slag layer for insulation under these circumstances, as the refractory may either melt or react with the gaseous reactants.
3. The design heat loss of the reactor will always be based on the ideal wall, where a layer of solid slag covers the refractory and this in turn is covered by a layer of

liquid slag. Decreasing the melting point of the slag by adding fluxing material to the coal will always result in a lower heat loss and will make it possible to run with the ideal wall condition with almost any coal.

When processing feedstocks with a low ash content the heat loss through the wall will only marginally increase, although it will take longer to build up the layer of solid slag. The same holds for slags with a low viscosity. Low viscosities will result in a thicker layer of solid slag and a thinner layer of liquid slag.

4. The layer of liquid slag depends on how much slag reaches the wall. An increase in this slag flux can be accomplished by introducing the reactants into the cylindrically-shaped reactor in such a way that the slag will preferentially be deposited on the wall – for example, by giving the reactants some swirl upon leaving the burner. Care should be taken to ensure that this cyclonic motion does not result in a counter-current flow in the center of the reactor, as this may have undesirable side-effects at the reactor outlets. Some swirl is also favorable for good carbon conversion, since this will also increase the residence time of the large coal particles that are not entrained in the gas (see section 5.3, page 124).
5. The conditions in the reactor often make it ideal for reducing iron compounds present in the ash to liquid iron. For the vertical wall of the reactor this is not much of a problem, but in the bottom of the reactor this may lead to a layer of molten slag floating on top of molten iron. This situation is similar to that encountered in the bottom of a blast furnace. Generally, the geometry of the bottom of the reactor is such that the iron flows out of the reactor together with the molten slag. The iron is then found in the slag as small lumps that give the slag particles a rusty appearance.

6.5 BURNERS

Most burner designs are confidential, although a fair amount of knowledge can be gleaned from the patent literature. Most of the burners (sometimes known as combustors, feed injectors or tuyères) used are of the co-annular type, where the reactants are fed through axisymmetrical annular openings at the front of the burner. The burners have to be protected from the hottest part of the reactor. Hence, contact of the oxygen with the hot syngas in the reactor near the burner opening must be avoided. Very large-capacity burners are only possible when the coal also enters the reactor via an annular slit (van der Burgt, 1990). In virtually all cases, the reactants come into contact with each other inside the reactor. Pre-mixing the reactants is not recommended because of the dangers associated with pre-combustion.

Special attention has to be paid to cooling the burner front. A closed-loop burner cooling water system is applied in most cases. There are different philosophies about the most suitable pressure for the burner cooling water. The primary concern in all cases is the behavior of the system in the event of a leak at the burner front. One school of thought prefers a water pressure higher than the gasifier pressure, so that the gas can never enter the cooling water system. In the case of a leak, water will then enter the gasifier. Leak detection therefore has to be based on cooling water flow.

The other school of thought prefers a lower burner cooling water pressure, using CO detection in the cooling water system to reveal leaks. On one point there is consensus; namely, the advantage of having a cooling water temperature in the 150–200°C range, which is sufficient to prevent the steam present in the blast from condensing on the cooled burner face. This implies a pressure in the range of 5–15 bar.

For pressurized gasifiers, special attention must be given to the heat-up procedure, since the gas flows during this operation differ considerably from the normal design case. Heat-up burners require special consideration. Where the reactor has an insulating refractory wall, it is possible to heat up this wall with an atmospheric pressure gas or oil burner, exchange the burner for a coal burner, and ignite the coal/blast mixture on the hot brick wall. In the case of membrane walls, with their very limited heat capacity, this is not possible, as they will cool in less than a minute and burner changes cannot be made in this short period. Therefore, in the case of a membrane-wall gasifier, the ignition burner must remain lit until the first coal burner has ignited. During this period there must be a continuous flame while the pressure is increased from atmospheric to operating pressure. This is particularly complicated for reactors with multiple burners or where the heat-up burner is not integrated into the main burner.

The relatively long time that is required for this heat-up operation is one of the reasons why IGCC power stations are not generally considered suitable for peak shaving duty. On the other hand, where a reactor is kept on hot standby, a quick start is possible, particularly since in most cases the procedure is at least semi- (if not fully) automatic.

Burners for oil service are also generally of a water-cooled co-annular design (Pelofsky, 1977; Weigner *et al.*, 2002). The design of such burners, which are centrally top-mounted, can include a removable gas-fired heat-up burner with internal igniter. Weigner *et al.* (2002) describe an automatic temperature ramp system integrating firing of the heat-up and main burners during reactor heat-up. The heat-up burner is removed at 1100°C prior to ignition of the main feedstock. With such a burner, a turndown ratio of 60% is achievable.

A similar arrangement can be seen in the top-fired Siemens reactor, which incorporates a central gas flow to the pilot burner surrounded by annular slits for oxygen that incorporate a swirler and an outer slit for fuel (Schingnitz *et al.*, 2000).

Burner lifetime for coal service, particularly for slurry feeds, continues to be a source of concern. Typical lifetimes of 2–6 months have been reported (Clayton *et al.*, 2002). Burners in oil service achieve a service life of over 1 year (Higman, 1994; Weigner *et al.*, 2002), which is generally considered acceptable even if a "long-term goal of two years would be desirable" (Clayton *et al.*, 2002).

6.6 SYNTHESIS GAS COOLING

Gases leave the gasification reactor at high temperatures, varying from 550°C for some dry-ash moving-bed gasifiers to 1600°C for dry-coal feed entrained-flow slagging gasifiers.

With the exception of natural gas feeds, the synthesis gas from a gasification reactor is contaminated with various components which must be removed before the syngas is suitable for its final use, whether as chemical feedstock or as fuel. These contaminants, which may be particulates, sulfur or chlorine compounds, tars or others, must be removed, and all such removal processes, even the so-called hot-gas clean-up processes, operate at temperatures considerably lower than that of the gasifier itself. Thus there is always the necessity to cool the syngas. In most cases it will also be desirable to make good use of the sensible heat in the gas, for example, by raising steam. On the other hand, differences in the contaminants, which vary from feed to feed, as well as characteristics of the different gasification processes themselves, lead to a considerable variety of solutions to the syngas cooling task.

The highest-temperature gasification processes are the entrained-flow slagging processes. On cooling the gas any entrained ash particles will inevitably pass through the critical temperature range, where the ash becomes sticky. Every gas-cooling concept has to take this into account and quench the gas as quickly as possible to a temperature at which the ash becomes dry, typically about 900°C. There are a number of different methods for achieving this, which are described in more detail below.

Fluid-bed coal gasifiers have typical outlet temperatures of 900–1000°C. Apart from some problems with tar, the hot gases can be used for the generation of a reasonable quality steam in a syngas cooler. Even after passing cyclones the gas does contain some fly ash, and hence in the design of the syngas cooler, the danger of potential erosion problems should be taken into account. When limestone is added to the feed to bind the sulfur, unconverted CaO may react back with CO_2 in the gas to $CaCO_3$ at temperatures below 950°C, which may enhance fouling in the syngas cooler.

Most biomass gasifiers operate around 900°C and suffer from the same syngas cooling issues as do other fluid-bed gasifiers. Moreover, as biomass ashes are rich in alkali carbonates, these may condense out or desublimate and cause additional fouling between 600 and 900°C. At lower temperatures the condensation point of volatiles in the gas is the main cause of fouling, as the condensing tars are ideal for catching ash particles.

Although in the case of moving-bed gasifiers the temperatures are low (300–550°C), the cooling of the gas is often complicated by the presence of tars in the gas that may foul heat exchangers when the temperatures drop below the condensation point of the heaviest tar components. In practice, this means that only low- or medium-pressure saturated steam can be produced in these syngas coolers.

In the Lurgi dry-ash and the BGL slagging gasifiers, the transition from slagging to non-slagging occurs within the coal bed and does not cause problems as the bed is continuously moving in a downward direction, which keeps the reactor wall free from slag deposits.

6.6.1 Quenching

As discussed above, the most demanding syngas cooling equipment is required for single-stage entrained-flow slagging gasifiers. The key problem is the transition stage between slagging and non-slagging conditions. This transition temperature range has to

be crossed directly after leaving the slagging reactor, and ideally in such a way that the gas does not contact a wall before it is sufficiently cooled. One solution is to "sleeve" the inside of the quench section with clean gas (Staudinger and van der Burgt, 1977).

For entrained-flow slagging gasifiers, quenching can be accomplished in four different ways:

1. Radiant syngas cooler
2. Water quench
3. Gas quench
4. Chemical quench.

Radiant syngas cooler

Radiant boilers use only radiant heat transfer to cool the hot syngas leaving the gasifier. In this manner, cooling takes place without liquid or sticky slag particles touching the heat transfer surface and causing fouling. Although ensuring the flow patterns that achieve this requires considerable care in design, the experience has generally been positive and the reported reliability of such coolers is satisfactory (McDaniel and Hornik, 2000).

However, radiant boilers have the disadvantage that they scale awkwardly. For a scale-up factor of, say, 2, keeping the gas velocities constant, the vessel diameter scales by $\sqrt{2}$, whereas the requirement of surface area increases by a factor of 2. The height therefore also has to be increased by $\sqrt{2}$. This is in contrast to other heat exchangers, for which the volume increases proportionally with the throughput of the gasifier without an increase in height. The reason is that only the surface of the vessel can be used for heat exchange. A solution has been found in extending the wall surface of the radiant boiler by installing radial panels perpendicular to the surface, but this further complicates the construction. Radiant coolers can be prone to fouling, and they are difficult to clean by rapping. Furthermore, the heat dissipated by the wall can only be used for generating saturated steam.

All this makes radiant syngas coolers an expensive piece of equipment in practice. For the 250 MW_e Polk Power Station IGCC in Florida, the radiant syngas cooler (RSC) is "about 16 feet in diameter and 100 feet long, and weighs about 900 tons" (US Department of Energy, 2000). Nonetheless, the efficiency improvement over a quench justifies this expense, and a radiant cooler is part of the GEE IGCC reference configuration (Rigdon and Avidon, 2005).

Water quench

Hot gas can be quenched by evaporation of water into the gas. It is necessary to distinguish between a partial quench, in which only just enough water is evaporated to reduce the gas to 900°C, and a total quench, in which sufficient water is evaporated to saturate the gas with water vapor.

Partial quench is a well-proven quenching system that had already been applied in the atmospheric pressure Koppers-Totzek gasifiers between the burners and the radiant

syngas cooler above them. While effective in this configuration, replacement of nozzles as a result of wear does represent a maintenance cost, though not a limitation on reactor run-time length. Siemens also offers a partial quench system. The advantage of a partial quench is that it allows the sensible heat below 900°C in the syngas to be exploited for high-pressure steam-raising in a downstream syngas cooler.

A total quench has been a feature of GEE's oil gasification process since its inception, and has also been adopted in most of the GEE coal gasifiers. It is a low-cost and effective solution, but has the disadvantage that exergetically it is not very elegant. High-level heat that potentially can be put to better use is degraded to water vapor in the still dirty gas. Upon condensation, which is anyhow required in the case of fuel gas treating as practiced in most present day plants, this water will become available as a contaminated condensate stream that requires extensive cleaning. For slurry-feed processes, this problem of a large waste water plant is diminished by using this waste water for making the coal-water slurry feed for the gasifier.

If the final product is ammonia or hydrogen, the water vapor in the gas from a total quench may prove to be advantageous, as no additional steam has to be generated for the subsequent CO shift process. The only clean-up of the gas that is then required between the gasifier and the CO shift is a thorough solids removal. Either a hot-water wash or candle filters will do this job.

One point to note about water quenches, whether partial or total, is that the introduction of the water drives the shift reaction (equation (2.7) to the right, and thus the CO_2 content and the H_2/CO ratio of the gas are increased to some extent.

Gas quench

The gas quench is used in the SCGP and the Prenflo processes. The raw synthesis gas, which has been cooled in the syngas cooler and freed of solids in a candle filter, is split into two approximately equal portions. One is recycled with a compressor and used to quench the gas leaving the gasifier from about 1500 to about 900°C, and the remaining net gas production is routed to further downstream processing.

With gas cooling it is also possible to cool the gas further, down below 900°C, but in this case the amount of recycle gas required for the cooling will increase substantially. Even for the cooling of the gas from 1500 to 900°C the molar gas flow (although not the volumetric flow) doubles, and as the heat has to be removed eventually by indirect means to make the quench effective, this leads to voluminous heat exchangers. Therefore, in practice, quenching with gas is limited to temperatures of 900°C. This is about the same temperature obtained after a chemical quench or after passing a radiant boiler.

Chemical quench

In a chemical quench, ideally the sensible heat in the gas leaving the first slagging stage of an entrained-flow gasifier is used in the endothermic water gas reaction to gasify a second-stage feed. The second stage may be a dry-feed, as in the Japanese MHI

and EAGLE processes, or a slurry-feed as in the E-Gas process. Where the quench medium is a coal-water slurry, a significant percentage of the heat is used to heat up this medium, to evaporate the water, and for pyrolysis reactions, so that at least part of the cooling is actually attributable to a partial water quench. Either way, the heat absorbed is sufficient to cool the gas such that the ash from the second stage is dry.

Injecting coal as such or as water slurry into the hot gas leaving the first slagging stage has the disadvantage that some tars may be formed. In practice, with the E-Gas process this does not happen in normal operation, although it has been known to occur during upsets or low load operation (US Department of Energy, 2000).

By introducing the chemical quench or a second non-slagging stage to a dry-coal feed entrained-flow slagging gasifier, a gasifier is obtained that has an outlet temperature about 400–500°C lower than the first stage, and thus a lower oxygen consumption, as well as a higher CGE. As a result, the duty of the costly syngas cooler is substantially reduced. This has a cost advantage, which is attributable not only to the heat transfer surface area requirement, which is reduced by some 30%, but also to the possibility of using lower cost concepts such as a fire-tube boiler.

The efficiency gain for a dry-feed gasifier is limited (see section 5.3.1), but offers the advantage over a single-stage gasifier with the same outlet temperature of 1000–1100°C in that the bulk of the ash in the feed becomes available as an inert slag. The second non-slagging stage can be a simple brick-lined pressure vessel.

6.6.2 Synthesis gas coolers

When the gas from a slagging gasifier is quenched to about 900°C, or where the gas is produced at temperatures in the 900–1000°C range, it has to be cooled further before the gas can be treated for use. Two aspects of gas cleaning have to be considered carefully and intimately with the design of this section of the cooling system. These are particulate removal and condensation (whether it be condensation of tars from biomass gasification, for example, ammonium chloride from coal gasification, or simply water).

The first cleaning stage after the syngas cooler comprises the removal of any solids present in the gas. Effective solids removal is possible at temperatures below 500°C, whereas for the removal of acid gases and ammonia the gas has to be further cooled to essentially ambient temperatures.

The lowest-cost way of cooling the gas is to continue quenching to the temperatures required for the gas cleaning. This practice is only possible with a water quench. It results in the gas being loaded with even more steam, which then has to be condensed out when acid gases and ammonia are removed from the gas.

In a typical syngas cooler, the gas is cooled from 900°C to 300°C. At 900°C there are no sticky ash/slag particles left in the gas, and at 300°C there is as yet no chance of NH_4Cl deposits. This is the ideal temperature range for raising good-quality steam and for preheating the clean gas that is obtained after the near ambient temperature gas treating. Such preheating is beneficial, for example, when the gas is later used as clean fuel gas in a combined cycle power plant. Whether such preheating is economic

is another matter, as it requires an expensive gas–gas heat exchanger. These are particularly sensitive to erosion, if syngas upstream of the particulate removal is used. For corrosion and other material reasons, the metal temperatures should not exceed 500–600°C. When steam is to be made, the highest-temperature gas is therefore used for evaporation, followed by a superheating section, and finally for further evaporating and water preheat. The temperature range of 300–140°C is used for water preheat.

Where a gas quench is used, all the sensible heat in the gas leaving the gasifier is used for raising additional steam, which results in high efficiencies of the IGCC power station. The drawback is that this also results in the highest-cost syngas cooler.

The syngas cooler is often one of the most expensive items in a coal-gasification complex. Expensive high alloy steels have to be used in many places, as all the contaminants are still present in the gas. There is fly slag, which leads to erosion. There are also sulfur compounds, chlorine compounds, and so on. Frequent rapping of the boiler internals is required, for example, to remove deposits from the boiler tubes. In order to accomplish this, expensive penetrations have to be made through the pressure wall of the syngas cooler.

As in so many occasions in gasification, there is the classical trade-off between efficiency and capital cost. Water quenching is cheap but efficiency is reduced; whereas with a syngas cooler, especially in combination with a gas quench, the capital cost is high but so is the efficiency.

Syngas cooler designs

There are two principle designs for syngas coolers: water-tube boilers and fire-tube boilers. Both have been operated successfully in various plants. Fire-tube boilers are lower in cost but have certain limitations, particularly with high-pressure steam. In practically all applications the steam pressure is greater than the gas pressure, so that the tubes are subjected to external pressure. Depending on details of the individual design, maximum steam pressures for fire-tube boilers lie between 100 and 150 bar. An advantage of fire-tube boilers is the well-defined flow of the gas in the tubes, but the inlets need to be designed carefully in order to ensure that the dust-laden gas does not cause erosion. Another detail to which attention must be paid is the adequacy of the cooling at the inlet, where the heat fluxes are very high. In the field of oil gasification, fire-tube boilers are used almost exclusively, and some examples are discussed in section 6.6.3.

With water-tube boilers, the local flow pattern around the tubes is less even than with a fire-tube boiler, and there can be areas of almost stagnant gas, with the attendant risk of dust accumulation. A number of designs include rappers to shake off any dust (Keintzel and Gawlowski, 1993). On the other hand, at the HTW plant at Berrenrath, rappers originally included as part of the design were dispensed with after tests showed them to be unnecessary. In fact, at this plant both fire-tube and water-tube boilers were tested in parallel, and both were deemed to be satisfactory. The conclusion of these parallel tests was that economics would be the deciding factor in syngas cooler design selection (Gorges *et al.*, 1998).

6.6.3 Syngas cooling in oil service

There are a number of syngas cooler designs available for oil gasification service that have given excellent service over many years and which, in contrast to many designs for coal service, are relatively inexpensive. They all have a number of common features, not least that all are fire-tube designs. As discussed in section 5.4, oil gasifiers are operated so as to leave a certain amount of residual carbon in the gas, and this ensures that the ash passes through the syngas cooler as a dry particulate. The heat transfer in the cooler takes place through a number of coils, which are designed with a gas velocity of 25–35 m/s and arranged vertically in a water chamber. The selection of gas velocity, tube size and helical arrangement is made to ensure that ash and soot particles are transported through the syngas cooler with neither fouling nor abrasion of the tubes. The tubes have two or three reductions of diameter over their length, so as to ensure that the velocity is maintained in the design range over the length of the tube. The very high gas temperatures and heat fluxes at the inlet demand extreme attention to detail in the design, and the solutions of this issue represent an important differentiation between the different designs.

Borsig design

The syngas cooler design, which over the years has established itself as the standard for GEE plants, is that originally developed by Steinmüller (Figure 6.8), and is now manufactured and marketed by Borsig. Borsig's reference list includes 24 units with steam pressures as high as 110 bar.

The salient features of this fire-tube boiler are the coils and the hot gas inlet zone. The coils are made as individual "candles" mounted vertically and in parallel in the water bath. Each coil has its own "tube sheet" in the form of a double-walled tube. Boiler water flows through the annular space between the two tubes by forced circulation to provide intensive cooling. Recent developments include the use of stiffening ribs on the water side and a ceramic coating on the gas side of the inlet zone.

Shell design

Shell has its own proprietary design for its SGP oil gasification process, which is used in about 135 installations worldwide (see Figure 5.33). Generally these exchangers are designed for the production of saturated steam (up to 120 bar), but designs can include a superheater, as was installed for the natural gas fired unit in Bintulu. A first design for a residue-based application has been implemented (Camozzi *et al*., 2006).

The Shell waste heat boiler addresses the same issues as described above – namely safe passage of the solids through the boiler coils and intensive cooling of the gas inlet zone. The Shell coil design integrates the coils into a single helix rather

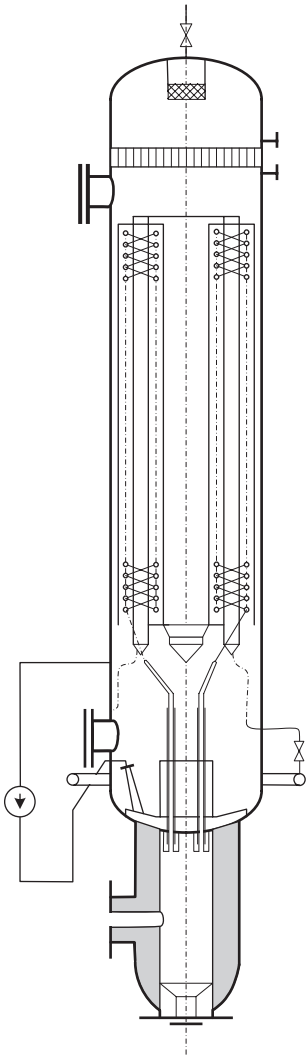

Figure 6.8 Borsig syngas cooler (source: Becker, 1969).

than having each coil separate. This keeps the radii of curvature larger than in the Borsig design, and thus the potential ovality of the tubes after bending is less. Since the mechanical design of the coils is defined by the maximum external pressure from steam side to gas side, this makes design for very high pressures somewhat easier.

Shell employs a patented double-tube sheet – one to provide the mechanical rigidity required, and in front of it a thin heat shield supported by the tubes. The incoming fresh boiler feed water cools the intermediate space.

Alstom design

A recent entry into the market for oil gasification syngas coolers is Alstom. For the tubes, Alstom uses a multiple-candle concept similar to that of the original Steinmüller design. Alstom has its own solution to intensive cooling of the inlet zone (Alstom, undated).

6.7 PARTICULATE REMOVAL

6.7.1 Dry solids removal

Only one step of the syngas treating can be carried out at an elevated temperature, and that is filtering. The introduction of candle filters that can remove all solids from the gas at temperatures of up to 500°C was one of the most significant developments in gasification during the last quarter of the twentieth century. Figure 6.9 provides an illustration of such a filter installation. The solids are deposited on the outside of the candles. Intermittently, from the clean gas side, the filters are blown back by a pulse of nitrogen or other gas that causes the solids (which have collected on the outside of the filters) to drop down to the bottom of the vessel, whence they can be removed via a lock-hopper. The importance of this development for gasification-based power stations is discussed in section 7.3. Filtering has to be carried out at temperatures between 300°C and 500°C. At about 250–300°C, the filters may be blinded by deposits of NH_4Cl. Above 500°C the vapor pressure of alkali compounds may still be high, which means that significant amounts may pass the filters. Below 500°C the amount of alkali compounds is negligible, provided they are properly filtered out. This is accomplished by removing them, together with the fly slag that acts as a substrate on which the alkali compounds are deposited. Operating in the higher-temperature range near 500°C is also beneficial for avoiding problems with carbonyls, as they will hardly form under these thermodynamically unfavorable conditions. Any nickel or iron present in the gas will also be deposited on the fly ash at these high temperatures.

The candle filters are mostly made of ceramic material, where a fine-grain ceramic layer is deposited on a wider pore support that gives strength to the filters. Special attention has to be given to the seal between the filters and the steel support plate. Candles suspended from a steel "tube sheet", as shown in Figure 6.9, have proved more successful than those supported from below.

Candle filter materials have been developed both on a ceramic and on a sintered metal basis. While ceramic materials can be operated at higher temperatures than metals without risk of sintering, the latter are more robust and can resist localized damage without rupture. Both ceramic and sintered metals have been used successfully. Operating lifetimes of 2 years between candle changes have been achieved with ceramics in Buggenum (Scheibner and Wolters, undated). In Wabash, sintered metal filters have proved satisfactory. The selection depends on the location

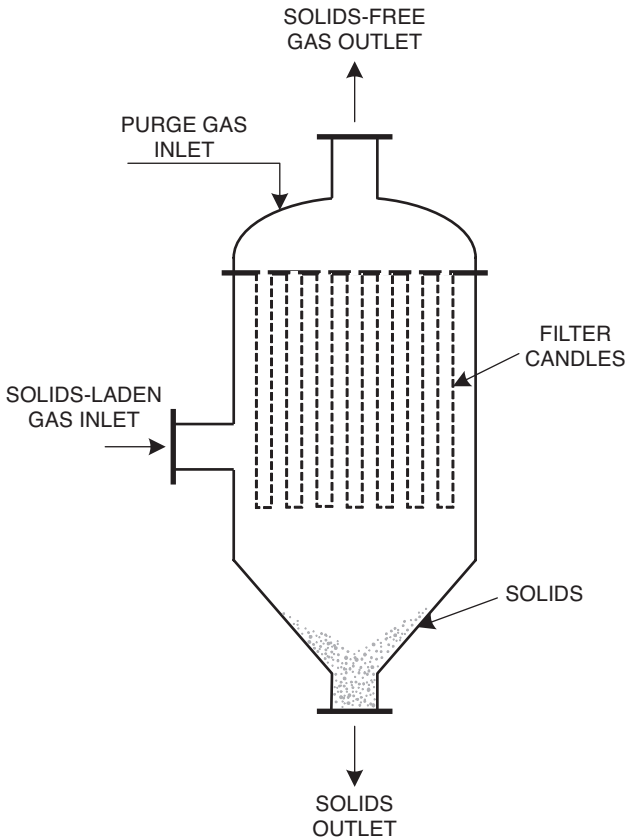

Figure 6.9 Candle filter vessel.

of the filter within any particular process and the situations to which it can be exposed.

6.7.2 Wet solids removal

In most existing plants, the solids are washed out with water in venturi scrubbers or wash towers. This scrubbing takes place below the dewpoint of the gas so that the finest solid particles can act as nuclei for condensation, thus ensuring that all solids are removed efficiently. The wet removal of solids causes them eventually to appear in the filter cake in the water treatment. The disadvantage of wet solids removal is that it is more difficult to separate the ash from compounds containing lead, zinc, cadmium and others, and thus the amount of chemical waste increases. On the other hand, in combination with a slurry-feed gasifier much of the fine material removed from the gas in a wet scrubber can be recycled to the slurry preparation section, giving it a second opportunity to be captured as slag.

6.8 PROCESS MEASUREMENT

In this section, the control of the gasifier itself will be discussed. This excludes the process control of, for example, an IGCC, where the gasifier is often closely integrated with the ASU and the CC. However interesting the complex control of such systems is, this will not be discussed here as it falls beyond the scope of this book.

6.8.1 Gasification temperature measurement

When operating a gasifier, one wants primarily to control the temperature. As discussed in Chapter 2, the temperature is the principle variable determining the gas composition. The temperature is decisive in relation to the ash rejection regime, whether slagging or non-slagging, and, ultimately, too high a temperature will destroy the integrity of the reactor containment, be it refractory or membrane wall.

Unfortunately, any accurate measurement of a gasifier temperature is extremely difficult, both for a number of practical reasons and, surprisingly, for one theoretical reason. Let us look at the latter first. The problem is that where there are still solid particles present that contain carbon, the measurements are influenced by the phenomena of the "chemical wet bulb temperature". This effect was first explained by van Loon (1952: 17–34), who showed that at the surface of the solid carbon, only endothermic reactions with H_2O and CO_2 occur, whereas, in a sort of halo around the particles, part of the CO and H_2 formed by these reactions react exothermically with oxygen to form H_2O and CO_2 (see Figure 6.10). This mechanism renders pyrometers

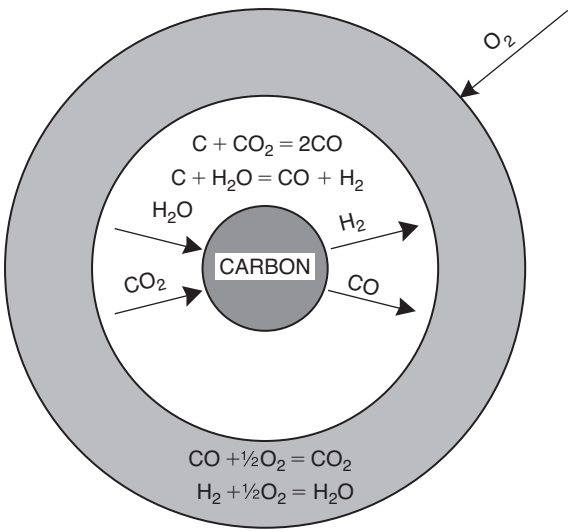

Figure 6.10 van Loon's gasification model.

of little use for exact measurement, since it is impossible to establish whether the temperature measured is dominated by the relatively cool but more strongly radiating solid particles or by the hot gases in the halo.

The practical problems of temperature measurement are particularly relevant to entrained-flow slagging gasifiers. This is caused partly by the harsh conditions of high temperatures *per se*, but also by the fact that slag can attack ceramic protective sheathing around the thermocouple, causing erosion damage to thermocouples by the ash and slag, and allowing hydrogen to penetrate into the metals of the thermocouples, thus causing faulty readings. Where nitrogen or other purge gas is used to protect the thermocouple assembly then local cooling occurs, which gives rise to understated temperatures. A further disadvantage of thermocouples is that their exact location has a significant influence on the accuracy of measurement. In refractory-lined gasifiers, the tip of the assembly is typically located slightly withdrawn into the wall, so as to protect it from slag or other erosion damage. The actual temperature measured is closer to that of the refractory than that of the reactor core, and thus is highly dependent on the extent of the depth of withdrawal from the reactor space.

Despite these disadvantages, platinum–rhodium thermocouples are still the most common device currently used for gasifier temperature measurement. It is accepted that real accuracy of temperature measurement is less important than consistency. For the gasifier operator who has set the feed inputs on the basis of other parameters (see below), a continuous and steady temperature reading is more important than the absolute value shown.

Nonetheless, investigations continue to develop alternative methods, not least because in oil gasification, thermocouple life can be run-length determining. Systems under consideration or development include the following.

- *Pyrometers*. Texaco used a pyrometer in its pilot unit for several years (Leininger, 2002). The principle advantage of such a system is that the sensor is located outside the reactor and is thus not subject to the harsh environment. The necessity to ensure pressure integrity, including a high-pressure nitrogen purge, does, however, make it expensive. Interestingly, the actual temperature measured is dependent on the gasifier fuel. With gas firing, the visible path reaches to the opposite wall of the reactor, so that the temperature measured is that of the refractory. Depending on the degree of solids in the reactor, the visible path may reach only to the center – that is, the hottest location in the reactor – or even less, where the temperature is cooler again. Furthermore, the nitrogen purge can cool the slag around the line of sight of the pyrometer, leading to a loss of reading. Interruption of the nitrogen purge can solve this problem on-line – a distinct advantage over thermocouples, which generally require a reactor shutdown for replacement. Interpretation of such a loss of reading does require additional temperature measurements, so any commercialization of pyrometry is likely to be in addition to rather than as a replacement of thermocouples. Further tests in a commercial reactor were disappointing because of the frequency with which slag obscured the line of sight.

- *Steam make in the membrane wall*. This measurement is, of course, limited to entrained-flow reactors having a membrane wall or water jacket. As already mentioned in section 6.4.2, the steam make in the membrane wall is a valuable indicator for both the heat loss through the wall and the reactor temperature. It has the advantage of being an integral measurement of the temperature anywhere near the wall of the reactor. It is fast, with a response time of less than a minute, and very reliable. It does not, however, provide local temperature values.
- *Heat flux measurement*. This measurement comprises installing a small piece of membrane wall in the wall of a reactor and measuring the increase in water temperature of a known flow of water through the membrane wall. It can give a fast – 10–30 s response time – indication of the local temperature.
- *Microwave-based measurements*. These have also been considered.
- *Other devices*. A new system based on temperature-dependent changes in the optical properties of single-crystal sapphire is under development. Despite some promising results for other applications, this sensor will still have to survive the difficult reactor environment, and the fundamental uncertainties of temperature measurement in a gasifier will remain (Pickrell *et al*., 2002).
- *Using the gas analysis*. Using the methane or the CO_2 content in the gas can give a valuable indication of the reactor temperature. The advantage of this method is that it gives an integral measurement of the temperature at the reactor outlet. However, it does not give an indication about local hot spots. Moreover, the measurement has a certain time lag that, with modern gas analyzers, can be reduced to less than a minute. For the interpretation of the gas analysis, the reader is referred to section 6.8.3.

6.8.2 Temperature control

To use a temperature measurement for process control is especially difficult in entrained-flow gasifiers where the only option is an indirect temperature measurement based on the composition of the product gas. Moreover, the control is complicated by the very short residence time of 1–3 seconds. Operating for a short period at a temperature below the melting point of the ash immediately leads to the build-up of solid slag on the walls and at the bottom of the reactor. Membrane-wall reactors are worse in this respect than refractory-lined reactors, as the membrane walls are relatively cool (250–300°C, depending on steam pressure) and keep their heat only for a very short period. Because most modern gasification plants have entrained-flow gasifiers, the discussion on process control will concentrate on this type of gasifier.

Fluid beds are already less difficult to control because of the much lower temperatures of 900–1150°C and the longer residence time.

The easiest gasifiers in terms of control are moving-bed gasifiers, because of their very long coal/char residence time of about 1 hour. On the other hand, the gases have a short residence time and leave the reactor at relatively low temperatures of below

600°C. Measuring the reactor outlet temperatures gives a fast indication of the gasification temperatures in the bottom of the reactor.

6.8.3 Gas analysis

The coal footprint was already discussed in section 2.3.3. This footprint is only relevant for fluid-bed and entrained-flow gasifiers, as it assumes chemical equilibrium between all major gas components under conditions where methane is the only hydrocarbon that is present. It was concluded that, in general, the methane content in the gas is the best indicator for monitoring the temperature of a non water-slurry feed gasifier. In fact, the only reason to calculate the methane content in entrained-flow gasifiers is for process control, as the impact of the methane content (only a few hundred ppmv) on the total mass and energy balance is negligible.

Studying the coal footprint shows that the CO_2 content of a gas is a dangerous indicator, as the iso-CO_2 lines run almost perpendicular to the isotherms (see Figure 2.6). Those experienced in furnace control engaged in the start-up of a gasifier may have a tendency to look only at the CO_2 content in the gas. For gasifiers with a coal-water slurry feed, the correlation between reaction temperature and CO_2 is highly dependent on the slurry concentration and therefore not a good direct indicator of temperature. The typical control scheme in this case is relatively simple being based on the ratio between the flows of coal-water slurry and the oxygen. And if the reaction takes place in a refractory-lined reactor where the heat loss is low, there is no need to worry about either the heat loss in the reactor or the methane content in the gas. The coal footprint is simple, as it has only two dimensions (no heat loss as an additional variable) and the methane content in the gas is always very low because of the high water concentration, so there is no need to use it for control purposes.

With dry-coal feed entrained-flow gasifiers life becomes more difficult as, in comparison with the coal-water slurry feed systems, now three flows of reactants have to be monitored. Furthermore, dry-coal feed entrained-flow gasifiers so far have always featured a membrane wall and hence heat loss also plays a role. The methane content in the gas analysis must be checked with calculated values based on the mass and heat balance and chemical equilibria, as the methane value depends on variables such as the feedstock, reactor geometry and freezing-in temperatures of the various reactions.

Gasifier outlet temperature as a function of the gas analysis

Calculating the gasifier outlet temperature from the gas analysis is not so simple. The reason is that it is not possible to measure the composition of the gas when it leaves the reactor. The best that can be done is a "*post mortem*" when the gas has been cooled down. There have been attempts to devise a means to draw a gas sample directly after the gas has left the reactor through a cooled, high-alloy, thin tube and then perform the analysis. The idea is that by freezing-in the equilibria between the various possible reactions, a fair analysis will be obtained. However,

the problem is that high-alloy steels mostly contain nickel or other metals, which may catalyze reactions between the various gas components. Moreover, by drawing the sample gas through a thin capillary tube the exposed metal surface is relatively large and this only makes the situation worse. Finally, it is difficult to avoid fouling of the entrance of the capillary tube and to keep it open.

Because of these difficulties, it is more practical to analyze the gas after it has been cooled down by quenching or by indirect cooling. In the case of single-stage entrained-flow gasifiers, the analysis has to be corrected for the fact that, for example, the CO shift reaction freezes in at a temperature below that prevailing at the outlet of the gasifier itself. For entrained-flow gasifiers, the reactor outlet temperature is about 1450–1550°C. In most cases it may be assumed that the freezing-in of the CO shift occurs at a temperature of 1300°C or lower. This causes a small part of the CO present in the gas leaving the reactor to be converted into H_2. This reaction is exothermic, and hence the heat effect increases slightly the duty of the subsequent gas-cooling train.

Cooling the gas by quenching with water will also result in some CO shift. In general, there is always some CO shift taking place until the point where the temperature has dropped to about 1000–1300°C. Only below 1000°C will the cooling be purely physical.

The temperature at which the CO shift reaction freezes can be calculated from the gas analysis of the cool gas. The first step is to correct the gas analysis for the fact that water has condensed out of the gas, as the gas analysis always takes place after the gas has been cooled below its dewpoint. From this corrected gas composition, the k_p value of the CO shift reaction can be calculated.

Certainly, where the gas leaving the gasifier has been cooled by quenching with water, it will be found that the corresponding temperature T_{eq} associated with this k_p value is much higher than the outlet temperature of the gasifier. This is logical, as much of the water was added to the gas below the temperature at which the CO shift reaction freezes and has only increased the water content of the gas without having any chemical effect. In a trial-and-error calculation, it is now possible to subtract quench water from the gas in such a way that the mass and energy balance tallies. The temperature of the water and of the gas at the gasifier outlet must of course be known before this exercise can be carried out. Subtracting the water results in a higher temperature of the gas in the now "shortened" quench and in a lower – but still too high – T_{eq} corresponding to the newly calculated k_p value. Hence, the gas temperature and the equilibrium temperature come closer together. By repeating this procedure there comes a moment where both temperatures become equal, and this is the temperature at which the CO shift reaction was frozen in (see Figure 6.11).

With the gas analysis it is thus possible to calculate the freezing-in temperature of the CO shift reaction accurately, but this says nothing about the outlet temperature of the gasifier. It is possible, though, to make an element balance over the reactor, and then the outlet temperature can be calculated to within about 30°C. A computer program for calculating the freezing-in temperature of the CO shift equilibrium

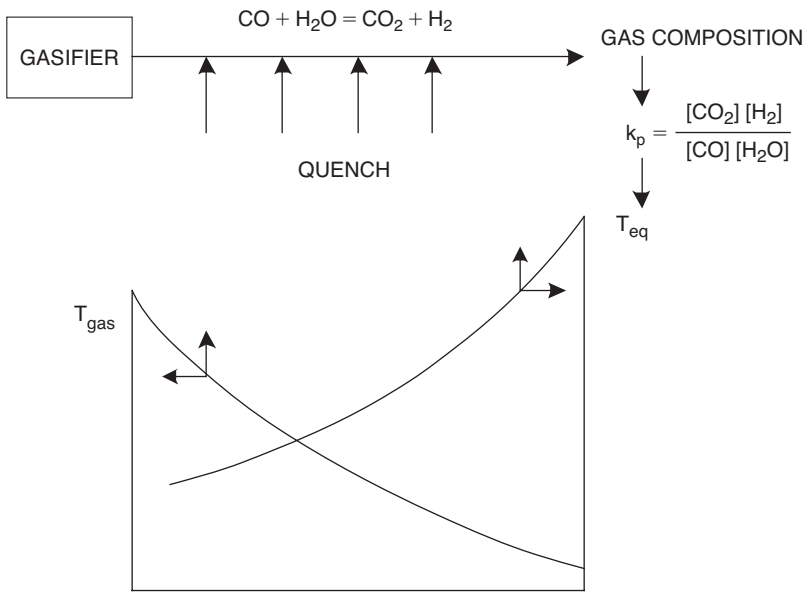

Figure 6.11 Calculation of CO shift equilibrium temperature.

from the gas analysis is provided in the companion website. It is given for both water quenching and indirect cooling. The indirect cooling can be either a radiant boiler or a gas quench.

The freezing-in temperature of a suitable methane-containing reaction can also be calculated.

The best reaction to use (see also section 2.2.2) is that previously shown in equation (2.10):

$$CH_4 + CO_2 \leftrightarrows 2CO + 2H_2$$

The advantage of this reaction is that there is no water present.

The data given for the coal footprint in Figures 2.5 and 2.6 have been obtained taking into account the effect of the adjustment of the CO shift reaction. These data show that, although it has been assumed that the freezing temperature of this reaction is the same in all calculations, the composition of the gas after cooling still clearly reflects the differences in the reactor outlet temperature.

Thus far, readers may be wondering why the methane content in the product gas has been taken into account, as in entrained-flow slagging gasifiers it is only a few hundred ppmv and hardly plays a role in the overall mass and heat balance. Moreover, forgetting about methane greatly simplifies the calculations. The reason is process control. In the preceding discussion on the coal footprint, it was already mentioned that the iso-methane lines run more or less parallel to the isotherms and

hence give a good indication of the outlet temperature of the gasifier reactor. In fact, this is only partly true. They provide a valuable indication of this temperature, but on calculating what the outlet temperature is on the basis of the gas analysis, values are found that relate to different temperatures than might reasonably be expected. However, introducing correction factors with the calculated temperatures based on the other gas components, the methane content becomes an extremely valuable indicator of the reactor outlet temperature.

Overall procedure for process control of entrained-flow slagging gasifiers

For the initial start-up (or with a new feedstock), gasifier flows are set on the basis of values calculated for the coal footprint (van der Burgt, 1992) from analyses of the coal and blast and the calculated heat loss from the gasifier. The reaction conditions will in general be set such that there is a surplus of blast (in most cases largely oxygen). For dry-coal feed entrained-flow gasifiers this means that the reactor operates with a CO_2 content of, say, 3–4 mol% and a calculated temperature well above the melting point of the ash components that may already contain fluxing material. The fastest indication for undesirable fluctuations in reactor temperature is reflected in the steam production in the wall of a reactor with a jacket or membrane wall. The next indication is the methane content of the gas. Then the CO_2 content can be decreased to about 1 mol% by decreasing the oxygen/coal ratio and adjusting the steam/coal ratio. During this operation the theoretical coal footprint will be adjusted to the actual values found – for example, for the reactor heat loss and the CH_4 content of the gas – which data will than be used later for optimizing the gasification conditions and the control of the reactor. The coal footprint is a very valuable tool. For the CO_2 content and the percentages of the other major gas components, the theoretical figures and actual figures differ little provided the freezing-in of the CO shift equilibrium is taken into account. Only the actual CH_4 data can deviate considerable from the calculated data. Hence, gauging the theoretical data with actual measurements becomes important.

6.9 TRACE COMPONENTS IN RAW SYNTHESIS GAS

In Chapter 2 we discussed the principal components of the raw synthesis gas from the gasification reactor, namely carbon, CO, CO_2, H_2, H_2O and CH_4. A review of the raw gas composition would, however, be incomplete without a discussion of trace components, which can influence the selection of the downstream gas treating process, corrosion behavior, or the potential for fouling. In this respect it is, for instance, important to have an understanding of the fate of the sulfur and nitrogen in the feedstock. Similarly, it is important to be aware of those reactions that take place downstream of the reactor in the gas-cooling and solids-removal sections of the process, such as metal carbonyl or organic acid formation.

6.9.1 Sulfur compounds

The existence of sulfur compounds in raw synthesis gas represent a poison for the catalysts of most chemical applications, including ammonia, methanol, Fischer-Tropsch, low temperature shift and others. In power applications, if untreated, they would be emitted with the flue gas as SO_2 and SO_3 – major components of "acid rain".

In high-temperature processes, all sulfur components in the feed are converted to H_2S or COS. Other compounds, such as SO_x or CS_2, are essentially absent. This is not the case in low-temperature processes, where tars and other species have not been completely cracked. A breakdown of the sulfur compounds in raw gas from a Lurgi dry bottom gasifier is given in Table 6.2 as an example.

The relationship between the H_2S and COS contents of a raw gas is determined by two reactions – the hydrogenation reaction:

$$COS + H_2 \leftrightarrows H_2S + CO \qquad +7\ \text{MJ/kmol} \tag{6.1}$$

and the hydrolysis reaction:

$$COS + H_2O \leftrightarrows H_2S + CO_2 \qquad -34\ \text{MJ/kmol} \tag{6.2}$$

Equilibrium constants for these reactions can be found in the literature (Reimert and Schaub, 1989). Under typical gasification conditions H_2S is the dominant species, and approximately 93–98% of the sulfur is in this form, the rest being COS.

It is important to be aware of the COS content in the raw gas, since not all gas treatment systems will remove COS. In order to overcome this, it may be necessary to perform a selective catalytic hydrolysis of COS to H_2S (reaction 6.2) prior to the acid gas removal. This is discussed in more detail in Chapter 8.

Table 6.2
Sulfur compounds in raw gas from a Lurgi dry bottom gasifier

Component		
COS	ppmv	180
H_2S	ppmv	15,300
Mercaptan S	ppmv	600
Thiophenes	ppmv	5
CS_2	ppmv	100

Source: Supp, 1990.

6.9.2 Nitrogen compounds

Formation of HCN and NH_3

Nitrogen enters the gasifier in two forms, either as molecular nitrogen, generally in the gasification agent (but also as a component in gaseous feeds), or as organic nitrogen in the fuel. While the bulk of the nitrogen in the synthesis gas is present as molecular nitrogen, most gasifiers produce small amounts of HCN and NH_3. There is little literature on the formation of nitrogen compounds in gasifiers. It is, however, possible to draw inferences from the well-researched mechanisms of NO_x formation in combustion flames.

Fuel-derived formation of HCN and NH_3 is far greater than that formed from molecular nitrogen, so that in most cases the latter can be neglected. Fuel nitrogen is often contained in structures with N–H and N–C bonds, which are much weaker than the triple bond in molecular nitrogen. The typical mechanism for NO formation during complete combustion can be depicted as in Figure 6.12.

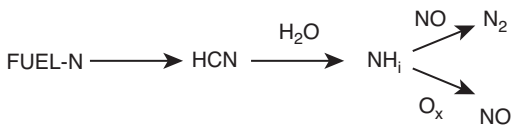

Figure 6.12 Typical mechanism for NO formation during complete combustion (source: Barin, 1989).

Initially, fuel nitrogen is converted to HCN, which rapidly decays to NH_i (I = 1, 2, 3), which, under combustion conditions where sufficient oxygen is present, reacts to form NO and N_2 (Smoot, 1993). Under gasification conditions, the oxidation of NH_i radicals does not take place, and in the presence of a large hydrogen surplus the nitrogen remains as HCN and NH_3. Research on NO_x formation indicates that HCN is the principle product when the nitrogen in the fuel is bound in aromatic rings, whereas NH_3 appears to be the principle product when the nitrogen is bound in amines. The proportions of HCN and NH_3 formed therefore vary in accordance with the fuel characteristics.

Only in the partial oxidation of natural gas, where no chemically bound fuel nitrogen is present, is it necessary to recognize that at least some thermal HCN and NH_3 formation does take place. Since thermal HCN and NH_3 formation is a function of the actual temperatures in the flame zone, and thus of individual burner performance, one can only rely on the experience of licensors with their own burner designs to provide data on the expected HCN and NH_3 formation.

Typical concentrations

Typical concentrations of nitrogen compounds in various syngases are shown in Table 6.3. It is unclear whether the figure of 0.05 ppmv NO_x given by Rowles for

Table 6.3
Nitrogen components in synthesis gas

Feed	Process	HCN	NH_3	NO/NO_2	Source
Coal	Lurgi dry bottom gasifier	22 ppmv	39 ppmv	NO_x 0.02 ppmv	Supp (1990: 23)
Coal	Siemens	0.8 ppmv	0.3–0.5 ppmv	n.a.	Lorson *et al*. (1995)
Oil		50 ppmv	1–20 ppmv	0.05 ppmv	Weiss (1997); Slack and James (1974)
Gas		Traces	Traces	n.a.	
Biomass		<21 ppmv	2900 ppmv	n.a.	Boerrigter *et al*. (2002)

oil gasification (Slack and James, 1974) was really measured, or just represents the limit of detectability. For raw gas from a Koppers-Totzek gasifier, Partridge (1978) provides a figure of 70 ppm NO. In the same source, he gives a figure of 150 ppm for the oxygen content. These are both much higher than figures quoted for other entrained-flow processes, and may well be due to the ingress of air and/or poor mixing of reactants in the gasifier.

Effects of nitrogen compound impurities

Ammonia has a very high solubility in water (two orders of magnitude higher than CO_2). One effect of this is that ammonia is seldom removed from the main wash or quench water circuit of carbon removal systems. Ammonia is recycled in the scrubber wash water and partially stripped out by the syngas in the scrubber, such that the potential for full ammonia removal in the syngas water wash is seldom realized.

Where chlorine is present, typically when gasifying coal, ammonia will combine with the chlorides to form ammonium chloride (see section 6.9.3).

In methanol plants, ammonia (and also nitrogen oxides) can contribute to the formation of amines on the methanol synthesis catalyst. The presence of amines is not permitted in internationally accepted methanol specifications (e.g. US Federal Specification, Grade AA), and can only be removed from the raw methanol with an ion exchanger (Supp, 1990). It is therefore preferable to ensure the absence of nitrogen compounds in the synthesis gas to the synthesis itself.

Hydrogen cyanide also has high solubility in water and other physical wash solutions. If the main acid gas removal (AGR) is based on a physical solvent, then an

HCN pre-wash can be integrated with the main system. It can also be removed by a water wash, although it should be noted that the high solubility also has its downside, namely the cost of regeneration.

Care should be exercised when using an amine AGR on a gas with a high HCN content since, although amines will remove it satisfactorily, the acidic cyanide will react with the amine and degrade it. This problem should be examined as part of the AGR selection process.

Any HCN or NO entering a raw gas shift will be hydrogenated to ammonia (BASF, undated) For some catalytic processes, such as Fischer-Tropsch, HCN acts as a poison (Boerrigter *et al*., 2002).

Nitrogen oxides require particular attention in ammonia plants. In the liquid nitrogen wash (LNW) of an ammonia plant they will form a resin with any unsaturated hydrocarbons in the gas, and this resin is "extremely susceptible to spontaneous detonation" (Slack and James, 1974). In most plants, the molecular sieve immediately upstream of the LNW represents the last line of defense against ingress of both NO_x and unsaturated hydrocarbons into the cold box. If Rectisol is used as the acid gas removal system, for instance, the unsaturated hydrocarbons would already be removed at this stage. Where a raw gas shift is installed, both nitrogen oxides and unsaturated hydrocarbons would be hydrogenated on the catalyst.

6.9.3 Chlorine compounds

Chlorine compounds are present in most coals. They will react with ammonia in the raw gas to form ammonium chloride (NH_4Cl). At high temperatures it is (dissociated) in the vapor phase, but below 250–280°C it becomes solid and presents a fouling risk to the gas cooling train. At lower temperatures still, below the water dewpoint of the gas, it goes into solution and is highly corrosive. These aspects have to be considered in the design of the cooling train.

Metals in the feedstock will also form chlorides, (e.g. sodium chloride). Many of these have melting points in the range 350–800°C, and represent a fouling risk in heat exchangers.

Note also that chlorine is a catalyst poison for ammonia and methanol syntheses, as well as for the low temperature shift and some COS hydrolysis catalysts.

6.9.4 Unsaturated hydrocarbons

The existence of unsaturated hydrocarbons in the raw synthesis gas varies very widely. In the Lurgi dry bottom process there will in general be large quantities of aromatics and other unsaturates in the volatiles and tars, although the exact amount will also depend heavily on the coal. For biomass gasification, the presence of tars in the gas is also a problem. For high-temperature entrained-flow processes, including oil gasification, the presence of any hydrocarbon other than methane, whether saturated or unsaturated, is minimal.

Removal of hydrocarbons from the product gas of a Lurgi dry bottom gasifier can be integrated into the design of a Rectisol wash. Kriebel (1989) provides a description of this.

The effect of unsaturated hydrocarbons entering a liquid nitrogen wash together with nitrogen oxides is described in section 6.9.2.

Care should be taken with oil gasification using naphtha as a medium for soot extraction. Aromatic components in the naphtha dissolve in the water and can be introduced into the gas via the return water to the gas scrubber.

Unsaturated hydrocarbons will be hydrogenated when the gas is treated by a CoMo raw gas shift catalyst (BASF, undated).

6.9.5 Oxygen

Oxygen is a poison for some catalysts. Some typical requirements limit the oxygen content in the syngas to ca. 5 ppmv. In high-temperature gasification processes, whether of coal or oil, the oxygen is completely consumed in the reaction and no oxygen is contained in the synthesis gas. It is important, however, to be aware of the danger of introducing small quantities of oxygen into the gas in the subsequent processing. Typically, if using a water wash for solids removal, it is possible to introduce oxygen via the water. It is therefore advisable in critical circumstances to eliminate such sources of accidental contamination by, for example, using only deaerated water for scrubbing. Atmospheric gasification processes also have a risk of introducing oxygen from unintended sources.

Any oxygen in gas subjected to CO shift will react with the hydrogen present (BASF, undated).

It is worth mentioning that oxygen is often measured together with argon, and occasionally an analysis result showing oxygen in syngas can cause some considerable concern before this "misleading message" is understood.

6.9.6 Formic acid

At higher partial pressures, carbon monoxide will react with water to form formic acid according to the equation

$$CO + H_2O \leftrightarrows HCOOH \qquad +26.23\ \text{MJ/kmol} \tag{6.3}$$

The thermodynamics of the reaction favor formic acid formation at lower temperatures so that this is particularly noticeable in the gas condensate.

At pressures up to about 60 bar there is usually sufficient ammonia formed to maintain a neutral pH in wash water. This is therefore seldom mentioned in connection with coal gasification, because such pressures have only been seen in pilot plants operating under test conditions. Furthermore, the pH of the water circuit in coal gasification processes is more often determined by the chloride content. It is,

however, a phenomenon that has been observed in high-pressure oil gasification and requires consideration in material selection (Strelzoff, 1974).

Formic acid may also be formed during COS hydrolysis.

6.9.7 Carbon

It is necessary to distinguish between two very different sources of carbon that can occur in raw synthesis gas.

Coal gasification

In coal gasification, there is always a certain amount of the initial carbon feedstock that is carried over unconverted in the form of char as particulate matter into the gas. Typically, this can be extracted from the gas in a particulate filter and – in the case of low carbon conversions – recycled to the gasifier. In the case of slagging gasifiers, this form of recycling has the added advantage that this carbon is usually intimately mixed with dry ash, which can also be recycled for slagging.

Oil gasification

In contrast to coal gasification, the carbon in synthesis gas leaving an oil gasifier is actually formed in the gasifier itself. The soot leaving an oil gasifier has an extremely high surface area of 200–800 m^2/g, depending on ash content (Higman, 2002).

An oil gasifier is deliberately operated to maintain a small quantity of this soot in the raw gas as an aid to sequestration of the ash from the reactor, whether of the quench type or with a syngas cooler. Typically, the soot make in modern plants is about 0.5–1.0% of the initial feed, although it could be as much as 3% in older plants. Removal of this carbon with a water wash is an integral part of all commercial oil gasification processes.

6.9.8 Metal carbonyls

The steady increase in the metal content of liquid partial oxidation feedstocks over the years has led to a developing awareness of the necessity to consider nickel and iron carbonyl formation in the raw synthesis gas. Nickel and iron carbonyl are toxic gaseous compounds that form during the cooling of the raw gas and pass on in the raw gas to the treating units. Depending on the treatment scheme, there may be a need for special handling to avoid problems.

Table 6.4 shows some of the principal chemical and physical data of these gases (Wildermuth *et al.*, 1990; Kerfoot, 1991; Lascelles *et al.*, 1991; IPCS, 1995, 2001).

The formation of nickel and iron carbonyls can take place in the presence of gaseous carbon monoxide in contact with metallic nickel or iron or their sulfides. Industrially, hydrogen sulfide or carbonyl sulfide are used as catalysts for the production of nickel carbonyl from active nickel. Ammonia has also been used as a catalyst. Given that all three of these gases are present in the raw synthesis gas, it is important to anticipate

Table 6.4
Properties of nickel and iron carbonyl

Name	Nickel tetracarbonyl	Iron pentacarbonyl
Formula	$Ni(CO)_4$	$Fe(CO)_5$
Molecular mass	170.7	195.9
Boiling point at 1.01 bar (°C)	43	103
Melting point (°C)	−19	−20
Vapor pressure (kPa)	42 at 20°C	3.49 at 20°C
Vapor density (air = 1)	5.9	6.8
Explosive limits in air (vol%)	3−34	3.7−12.5
Auto-ignition temperature (°C)	60	
Flash point (°C)	−24	−15
Solubility in water	None in water, but soluble in many organic solvents	Contradictory, 50–100 mg/l

some carbonyl formation in a partial oxidation gas containing as much as 50 mol% CO, if the feedstock contains significant quantities of nickel or iron.

The reactions leading to the formation of carbonyls in a partial oxidation unit are shown in Table 6.5, together with their equilibrium data derived from (Barin, 1989).

Figure 6.13 shows a plot of the equilibrium concentrations of nickel and iron carbonyls against temperature for various CO partial pressures. From these plots it can be seen that carbonyl formation increases with increasing pressure and decreasing temperature, whereby nickel carbonyl formation takes place already at significantly higher temperatures than iron carbonyl formation. Based on these data and a plant pressure of 60 bar and 45 mol% CO in the raw gas, the formation of 1 ppmv $Ni(CO)_4$ from nickel sulfide might be expected below about 380°C, and 1 ppmv $Fe(CO)_5$ from iron sulfide below 40°C. The corresponding temperatures for carbonyl formation from the metals are somewhat higher. Although the kinetics of the reactions, particularly at lower temperatures, may prevent equilibrium conditions arising in practice, these tendencies correspond with industrial experience (Soyez, 1988; Beeg *et al.*, 1993). Carbonyl formation takes place in the cold section of the plant and, because of the lack of solubility of the carbonyls in water, they leave the partial oxidation unit with the raw gas.

Formation of carbonyls can be inhibited to some degree by the presence of free oxygen. There is, however, no recorded instance of such an approach being taken in any gasification unit.

The consequences of any metal carbonyl slip into the gas treatment units depend very much on the treatment scheme. Quench cooling leads to a lower carbonyl formation than the use of a syngas cooler, since much of the metals removal takes place at higher temperatures. This applies particularly to iron carbonyl formation. Nonetheless, in one plant with quench cooling and subsequent raw gas shift, significant deposition of nickel sulfide

Table 6.5
Formation of nickel and iron carbonyl

Reaction	K_p	Log K_p	Equation no.
$Ni + 4CO \leftrightarrows Ni(CO)_4$	$\frac{P_{Ni(CO)_4}}{P_{CO}^4}$	$\frac{8299}{T} - 21.11$	(6.4)
$Fe + 5CO \leftrightarrows Fe(CO)_5$	$\frac{P_{Fe(CO)_5}}{P_{CO}^5}$	$\frac{8852}{T} - 29.60$	(6.5)
$NiS + 4CO + H_2 \leftrightarrows Ni(CO)_4 + H_2S$	$\frac{P_{Ni(CO)_4} \cdot P_{H_2S}}{P_{CO}^4 \cdot P_{H_2}}$	$\frac{4903}{T} - 18.78$	(6.6)
$FeS + 5CO + H_2 \leftrightarrows Fe(CO)_5 + H_2S$	$\frac{P_{Fe(CO)_5} \cdot P_{H_2S}}{P_{CO}^5 \cdot P_{H_2}}$	$\frac{4875}{T} - 28.21$	(6.7)

Note: Pressure units are in bar.

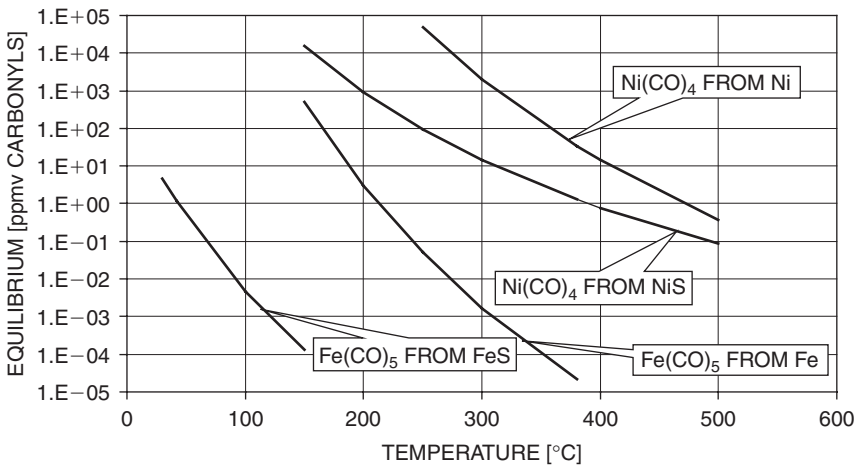

Figure 6.13 Equilibrium concentration of carbonyls as a function of the temperature.
Note: Based on a total pressure of 60 bar and 45% CO in the gas. These curves are only valid in the range shown and should not be extrapolated.

on the shift catalyst led to reduced catalyst life (BASF, undated). This is caused by the reverse of reaction (6.6), decomposition of the carbonyls on heating in the shift unit.

As described in Table 6.4, the carbonyls are not soluble in water. They are not removed from the gas by amine washes. Most physical-chemical washing systems will also allow the carbonyls to pass through the absorber and appear in the clean gas, so that, depending on the application, other problems may occur downstream.

Carbonyls are soluble in physical washes such as Rectisol or Selexol, and can be completely removed from the synthesis gas this way. It is, however, necessary to consider the subsequent fate of the metals. The relative partial pressures of carbon monoxide and hydrogen sulfide in the liquor containing the dissolved carbonyls are substantially different to that of the raw gas, so that reactions (6.6) and (6.7) are driven towards the left, particularly on heating the liquor for regeneration. The subsequent precipitation of the sulfides can cause problems, such as fouling of heat exchangers. If decomposition of the carbonyls is suppressed in the acid gas removal unit, then they will appear in the sour gas stream and may deposit on the Claus catalyst in the sulfur recovery unit. The various licensors of such physical wash processes have developed methods to control this phenomenon.

In addition to the primary source of carbonyls in the raw gas cooling, it has been reported that carbonyls can form through contact with a syngas product pipeline. There is, however, a lack of published data to substantiate this.

Effects of carbonyls

Iron carbonyl can present difficulties in methanol synthesis, and was a regular problem in the older high-pressure processes because of its formation if CO came into contact with iron in the loop equipment. Irrespective of its origin, iron carbonyl will decompose in the conditions of the methanol synthesis (50–100 bar, 250°C), leaving iron deposits on the methanol catalyst. The iron will then catalyze Fischer-Tropsch reactions, contaminating the methanol with unwanted hydrocarbons (Supp, 1990; Skrzypek *et al.*, 1994). Skrzypek and colleagues report that nickel carbonyl has the same effect. Carbonyls can act as a poison on other synthesis catalysts. This must be reviewed on a case-by-case basis.

In an IGCC situation, if carbonyls are permitted to enter the gas turbine, they will decompose at the high temperatures prevailing in the burners. There is a potential, then, for the metals to deposit on the turbine blades, causing imbalance. Care is generally exercised, therefore, to avoid this. Certainly there are recorded instances of metal depositing in the burner area of silo combustors.

6.9.9 Mercury

Mercury can be present in both coal and natural gas, although the quantities vary widely from source to source. Mercury presents a potential hazard both for the integrity of the plant and as a toxic emission for the environment. Whether gasifying

coal or partially oxidizing natural gas, mercury from the feed will appear at least in part in the synthesis gas, and so for these feeds it is necessary to address this feed contaminant.

Wilhelm (1990) describes a number of different mechanisms by which mercury degrades engineering materials. In particular, he mentions liquid metal embrittlement of high-strength steels. He also describes the formation of the highly explosive compound mercury nitride in the presence of ammonia.

Mercury is gaining increasing recognition as an important atmospheric pollutant from coal-fired power stations. The United States DOE has reported that for conventional coal-fired power stations, there is "currently no single technology" available that can control mercury from all power-plant flue gas emissions. The DOE has a major test and development program for processes to control mercury emission in flue gas (US Department of Energy, 2002). Considerable progress has been made with this program, but the cost-effectiveness of the improvements is very dependent on the coal type and synergies with other pollution control measures installed.

The situation for gasification technologies is different. Proven and economic methods for mercury removal are available and have been practiced for many years. Mercury can be adsorbed onto sulfur-impregnated carbon, which can achieve an effluent concentration of less than 0.1 $\mu g/m^3$ (Wilhelm, 1990).

A prominent example of mercury removal in a coal gasification environment is provided by the Eastman Chemical operation in Kingsport, Tennessee. A sulfur-impregnated activated carbon bed was installed upstream of the acid gas removal unit from the plant's inception in 1983 to protect downstream chemical processes from contamination, and has operated successfully for nearly 20 years (Trapp, 2002). Mercury capture is estimated to be between 90 and 95%. This experience was used as the basis for a cost comparison study performed for the US DOE showing that mercury removal from an IGCC plant could be as little as one-tenth of the cost of removal from a conventional PC power plant (Rutkowski *et al.*, 2002). It should be noted, however, that the costs of mercury removal from PC power plants have reduced substantially since then, particularly where it can be integrated into existing pollution control equipment, so caution should be exercised when applying these cost data.

Koss and Meyer (2002) also report on mercury removal from an existing coal gasification plant, in which metallic mercury removal is integrated into a Rectisol desulfurization unit operating at −57°C. Total mercury slip through the unit was measured at 1–2 ppbv.

In the case of a natural gas feed, Marsch (1990) has reported the explosion of an ammonia separator after 10 years of operation that was attributed to the presence of mercury. The natural gas feed to the primary reformer of this 1000 t/d ammonia plant contained on average 150–180 $\mu g/m^3$ mercury, amounting to an annual intake of 60–72 kg per year. Significant quantities of mercury passed through primary and secondary reformers (essentially a catalytic partial oxidation process), as well as a CO shift and acid gas removal system, to enter the ammonia synthesis unit, where it caused the damage described. In evaluating the conclusions from this accident,

Marsch recommends removal of any mercury in the feed to the lowest possible level. This message applies not only to ammonia manufacture, but equally to any other application involving the partial oxidation of natural gas.

6.9.10 Arsenic

One of the problems associated with coal gasification is that in coal many of the elements of the periodic table can be found in minor concentrations. An element of emerging concern is arsenic, which may be present in concentrations in the order of 1–25 ppmw in coal (see Table 4.7). Toxic elements are of no concern when they end up bound in the slag or in stable chemical compounds. The problem with arsenic is that, under reducing conditions, it forms the volatile compound AsH_3. It is a known poison for ammonia catalysts, but recorded instances of this occurring in commercial plants have not been found. Where arsenic is known to be in the feedstock and the possibility exists of arsenic depositing in equipment such as a gas turbine, then additional safety precautions need to be built into maintenance procedures.

Raw gas shift catalyst is reported as "removing arsenic very selectively", though arsenic deposits on the catalyst were low compared with those of nickel and carbon (BASF, undated).

6.10 CHOICE OF OXIDANT

All gasification processes require an oxidant for the partial oxidation reaction. There are essentially two alternatives available; air, which is available in unlimited quantities at the location of the gasifier, and oxygen, which has to be separated from the nitrogen in the air at considerable cost. A third alternative, oxygen-enriched air, is essentially a mixture of the two.

Historically, the first continuous partial oxidation systems, producer gas generators, operated with air. The idea of operating with pure oxygen was already developed in the 1890s, but it was only realized in the 1930s after the introduction of large-scale commercial cryogenic oxygen plants. Since then, most gasification plants have operated with high purity (>90 mol% O_2) oxygen. To a large extent this has been dictated by the fact that, in the period between 1935 and 1985, most gasifiers were built for chemical applications where the presence of large quantities of nitrogen originating from the air was detrimental to the downstream synthesis process. (Note that this also applies to ammonia, where only about 25–30% of the nitrogen associated with the oxygen used in the gasifier is required for the synthesis.)

These considerations of downstream chemistry do not apply to power applications, which have developed along with the increasing efficiencies of gas turbines, so that it was necessary to review the pros and cons of air versus oxygen for these applications. The result of such reviews in individual cases has been a decision in favor of oxygen in practically all large-scale projects (Simbeck and Karp, 1995).

For small-scale projects (<50 MW_e), mostly operating with biomass or waste, the decisions have tended to favor air as oxidant. It is therefore useful to understand the basic issues behind the choice of oxidant.

6.10.1 Effect of oxidant on the gasification process

The most significant effects of varying oxidant composition can be seen in Figure 6.14. These results have been determined using a constant gasifier temperature of 1500°C (as determined by the ash characteristics of the coal) and constant preheat temperatures for the reactants.

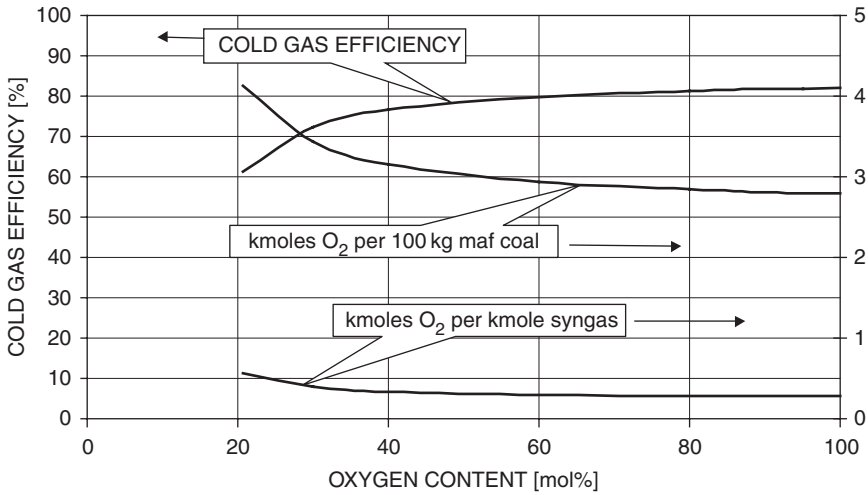

Figure 6.14 Gasification parameters as a function of oxygen in oxidant.

Cold gas efficiency

The loss of cold gas efficiency with increasing nitrogen content of the oxidant is immediately noticeable. It falls off from 82% at 100% O_2 to 61% with air. The essential reason for this, and for the other effects visible in Figure 6.14, is the amount of heat required to raise the nitrogen from its preheat temperature of 300°C up to the reactor outlet temperature of 1500°C. This can be partially compensated for by reducing the moderating steam, but this is only possible to the extent of reducing it to zero. For the chosen coal and conditions, this happens at about 26 mol% O_2 in the oxidant. At this point more carbon is combusted to CO_2 to maintain the heat balance, which further reduces the efficiency. Should a particular process require a minimum

amount of steam – for burner protection, for example – the point at which the CO_2 make begins to increase will be at a correspondingly higher oxygen content in the oxidant.

An alternative approach to compensating for the heat absorption by the nitrogen might appear to be an increase in preheat temperatures. Klosek and colleagues (1993) discuss this aspect in their paper, but point out its limitations. The required preheat temperatures of about 1200°C become "excessively high and unacceptable".

Similarly, the drop in useful syngas (H_2 + CO) is visible as the oxygen content in the blast decreases.

Gasification temperature

The preceding discussion is based on a temperature typical of entrained-flow slagging gasifiers. At lower gasification temperatures these effects are less, but are nevertheless still present. This is, however, only part of the story as to why KBR and Southern Company found air to be an economically more attractive oxidant for the 280 MW_e Orlando IGCC than oxygen (Rogers *et al.*, 2005). A more important factor is that with an oxygen-blown fluid-bed gasifier, large quantities of steam are required as moderator to ensure that the ash does not exceed its softening temperature and begin to agglomerate. Furthermore, this steam has to be supplied at gasifier pressure. The consequence of "robbing" the steam cycle in the oxygen-blown case is sufficient to tip the scales in favor of air-blowing.

Use of hot syngas

Reviewing the implications of oxidant quality only on a cold gas efficiency basis ignores the fate of the sensible heat contained in the syngas leaving the reactor. In an IGCC environment the most efficient use of this heat would be to feed it uncooled to the gas turbine, since this has a fundamentally higher efficiency than the steam cycle (see section 7.3). This theoretical possibility is, however, only realizable if the raw syngas quality is acceptable to the gas turbine, which in general is not the case. In particular, particulates and alkali metals need to be removed prior to the gas entering the gas turbine. These contaminants can be removed at 500°C using candle filters (see section 6.7). There is still an interest in "hot gas desulfurization", especially in connection with air blown gasifiers. This is not because the gas turbine cannot cope with the sulfur once the alkali salts have been removed, but because of the environmental requirements. Improvements in flue gas desulfurization technology provide a continuously moving target. With double-scrubbing technology, sulfur removal from the flue gas can also be as high as 99%. However, it should be noted that any improvement obtained with such technology developments would benefit oxygen-blown systems as much as they would air blown systems. Further details of gas cleaning technologies including hot gas clean up are described in Chapter 8.

An effective use of the hot gas, particularly where it is generated in a small-scale biomass gasifier, is to utilize it as a gaseous fuel in a large utility boiler. This is particularly effective, because the low efficiency inevitable with small-scale plants can be avoided by tying into the larger unit. A particularly interesting example is an air-blown CFB gasifier processing waste wood and firing the gas into a 600 MWe PC power boiler at Geetruidenberg in The Netherlands.

One other (albeit rare) case where the full sensible heat of the syngas from an air-blown gasifier is used in the downstream process is in the production of reducing gas, for example for nickel reduction, where the gas is fed from an oil gasifier directly to the reduction furnaces without any cooling.

6.10.2 Equipment sizing and gas flow rate

The flow rate of synthesis gas when using air as oxidant is approximately twice that of the equivalent oxygen-blown gasifier. This has consequences both for equipment sizing and for the gas cleaning technologies.

An air-blown gasifier must either be twice the size of an oxygen-blown one, or two are required. Whether the design is refractory lined (e.g. GEE) or fitted with a cooling wall (e.g. Shell or Siemens), the gasifier is an expensive piece of equipment. The same goes for the syngas cooler and other downstream equipment such as filters and gas cleaning equipment.

Besides the effect on equipment, it is important also to look at the emissions. To achieve the same absolute sulfur emissions, the sulfur slip from the AGR for an air-blown unit must be half that of an oxygen-blown gasifier, since there is twice as much gas. This will certainly require additional expenditure in the AGR unit.

6.10.3 Parasitic power

Parasitic power is usually defined as the electrical energy required for drivers of auxiliary machines in an IGCC. In connection with an oxygen-blown gasifier, this includes the air compressor (if any) for the ASU, the oxygen compressor and the nitrogen compressor (again, if any). For an air-blown gasifier, the parasitic power for the provision of oxidant is the air booster compressor (see Figure 6.15). Unfortunately this definition very quickly creates misunderstandings or confusion, because it does not include the power used by the air compressor of the gas turbine. Any air integration included in the cycle removes mechanical energy in the shaft from the generator, where it can produce electrical power. Since the compression energy internal to the gas turbine is not included in the normal definition of parasitic power, it is important to be very careful about drawing any conclusions from a single number provided for any particular project. In practice, finding an optimum integration between the gas turbine air compressor and the provision of oxidant is highly dependent on the characteristics of the air compressor itself, and it should

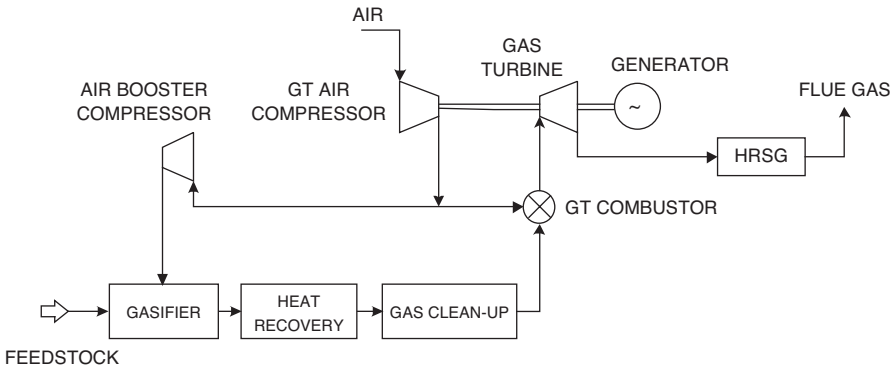

Figure 6.15 Typical air-blown IGCC.

come as no surprise to find that different optima can be presented by different gas turbine suppliers for the same project.

Klosek and colleagues (1993) point out that the parasitic power demand for an oxygen-blown IGCC without nitrogen integration can be significantly lower than that of an air-blown unit. This initially surprising result can be attributed to two facts: first, the air-blown unit must handle much more air; and second, the air must all be compressed to the gasifier inlet pressure, which in the current designs is significantly higher than the turbine combustor pressure. Reducing the pressure drop over the gasifier and treating could well change some of the above conclusions.

6.10.4 Deductions

Essentially, the reasons why most real IGCCs have been built using oxygen as oxidant are economic, and the technical background to these economics has been described in the preceding sections. These plants, whether demonstration (e.g. Buggenum, Puertollano, Wabash and Tampa at 250–300 MW) or commercial (e.g. Sarlux at 500 MW), are, however, all large projects. There is no disguising the fact that the favorable economics of oxygen-blown technology has an entry price, which is the investment cost of the ASU. At this scale, the entry price is well worth paying.

For small plants – smaller, say, than 50 MW, which is largely the realm of biomass and waste fuels – the initial investment in an ASU is less attractive. Savings on the much smaller equipment and the improved efficiency of oxygen operation are no longer able to pay for this investment. This is why many gasification projects in this size range use air-blown gasifiers. It is, however, not possible to provide any hard-and-fast guidelines for determining the break-even point between the two technologies. The number of variables, which include feedstock pricing and supply, gas turbine characteristics as discussed, and the potential for synergies in oxygen supply (see section 8.1), make a project-specific evaluation inevitable.

6.11 CORROSION ASPECTS

Gasification takes place at high temperatures – depending on process, anywhere between about 900°C and 1500°C. Processes have been developed with the capability of operating at pressures of over 100 bar, although commercial experience is limited to about 80 bar (oil) or 65 bar (coal). Other processes operate at atmospheric pressure. The synthesis gas produced contains CO_2, CO, H_2, CH_4, N_2, H_2O and, almost invariably, sulfur compounds, mostly H_2S. This gas is usually cooled down to ambient temperatures, and in doing so the temperature range imposed on the containing equipment is very wide, including sub-dewpoint temperatures. It is not surprising, therefore, that particular attention has to be paid to material selection in a potentially corrosive environment. Some of the corrosion mechanisms that can arise under these circumstances are well known from other situations. The purpose of this section is not, however, to address these, but rather to highlight those potential problems that might be less familiar to those with little prior experience of gasification, and to point to suitable literature where more information may be obtained.

6.11.1 Sulfur

The metal temperatures of evaporator sections of syngas coolers are determined primarily by the temperature and thus by the pressure of the steam side. With typical high-pressure steam conditions of 100 bar, this implies metal temperatures of between 300°C and 350°C. EPRI and KEMA have conducted corrosion tests specifically to determine corrosion rates by sulfiding in this temperature range, and they found a clear relationship between corrosion rate and partial pressure of H_2S (van Liere *et al.*, 1993). According to these results, in an atmosphere with 1 mol% H_2S at 40 bar and at 300°C a corrosion rate of 1.5 mm/y can be expected with low alloy steels, in which they specifically include alloy T22 (10CrMo910). The investigation was made primarily with coal gasification in mind, so that it is unclear from the published results what other trace components were in the gas. In our experience with gasification of heavy petroleum residues at 60 bar where 1% H_2S is by no means uncommon, any corrosion rate must be at least an order of magnitude lower than this, since evaporator coil lifetimes of 60 000 hours are common (Higman, 1994). It is unclear what protection mechanism exists in the latter case to explain this apparent contradiction.

When superheating is included in the syngas cooler, then much higher metal temperatures must be expected, and they are likely to be in the range 300–600°C. van Liere and colleagues' results indicate clearly that an austenitic steel is required for this service, typically SS310, which, interestingly, performs better than alloy 800.

Corrosion during shutdowns, particularly on the ingress of oxygen, requires careful attention. Appropriate operation and maintenance procedures have been published (National Association of Corrosion Engineers, 1993).

6.11.2 Hydrogen

A typical oil gasifier may have a pressure of 60–80 bar and a hydrogen content of, say, 30%. In other words, a hydrogen partial pressure of 20 bar or more may prevail. The equivalent figures for a coal gasifier will probably be lower. For partial oxidation of natural gas there may be over 50% hydrogen, although for most applications the absolute pressures may be somewhat lower than for oil. The shell of a refractory-lined gasifier will have a normal operating temperature of, say, 250°C, but will probably have a design temperature of 350–400°C to allow for small bypass gas streams through cracks in the refractory or, in the case of coal gasifiers, simple refractory wear. Materials in the equipment immediately downstream from the gasifier will be subjected to similar conditions, which are well into the range where hydrogen embrittlement can occur. Attention must be paid to the selection of hydrogen-tolerant alloys, which typically may be chrome–molybdenum steels or higher alloys, depending on actual hydrogen partial pressure and temperature. The best guide to material selection for this service is API Publication 941 (API, 1990), which contains the well-known Nelson curves.

6.11.3 Chlorides

In the reducing environment of a gasifier, a significant portion of any chlorine in the feed is converted to HCl. The most important corrosion aspect to consider is that, at temperatures below the water dewpoint, the condensate can cause pitting or stress corrosion cracking of the commoner austenitic steels. Good plant design can take care of exchangers and piping containing process condensate. It is an important matter for operations and maintenance procedures to avoid cold bridges through the insulation of warmer equipment (e.g. at pressure gauges), which can cause local condensation. Another point where operational care is required is during shutdown, when it is necessary to avoid condensate formation.

6.11.4 Metal dusting

Metal dusting is a particularly aggressive form of high-temperature (mostly) CO corrosion, which has received particular attention in connection with the manufacture of CO-rich synthesis gases using steam reforming or catalytic partial oxidation.

While certain details of the mechanism of metal dusting, and particularly the potential for countermeasures, remain the subject of some debate, the essentials have been understood for many years (Hochmann, 1972; Grabke *et al.*, 1994). Under gasification conditions, the Boudouard reaction (equation (2.4)) oxidizes carbon with CO_2 to form carbon monoxide. However, during syngas cooling a point is reached where the equilibrium favors the reverse reaction. At sites on the surface of materials containing, particularly, iron or nickel, the reverse Boudouard reaction is

catalyzed. The carbon thus formed destroys the matrix, and the surface metal is lost as a "dust" into the gas phase. The temperature range in which metal dusting can occur is from a lower limit of about 400–450°C, where the reaction kinetics cause the corrosion to slow down to a rate that may be considered acceptable, up to the Boudouard equilibrium temperature of the syngas (Hohmann, 1996). A typical sign of metal dusting during process operation is the appearance of the products of corrosion as a "magnetic soot" in the process condensate.

Metal dusting is unusual in gasification plants, because sulfur is an excellent inhibitor for this type of corrosion (Gommans and Huurdeman, 1994) and most gasifier feeds contain some sulfur. Where a desulfurized natural gas is used to manufacture syngas for Fischer-Tropsch products the potential for metal dusting is very high, since the CO partial pressures will tend to be considerably higher than in a steam reformer plant. Furthermore, the corrosion product, which is very fine and has a large surface area, provides an ideal catalyst for methanation of the CO in the syngas.

There is still a consensus that, although careful choice of metallurgy can slow down the effects of metal dusting, there is no real metallurgical solution. The best way to avoid this form of corrosion is to avoid gas–metal contact in the endangered temperature range. For a reformer tube outlet, Hohmann (1996) determined the area of the material at risk and introduced a purge gas at this location with success.

REFERENCES

Alstom Power Energy Recovery (undated). Company brochure. Kassel: Alstom Power Energy Recovery.

API. (1990). *API Publication 941*, 2nd edn. Washington, DC: American Petroleum Institute.

Barin, I. (1989). *Thermochemical Data of Pure Substances*. Weinheim: VCH Verlagsgesellschaft.

BASF (undated). *BASF Catalyst K 8-11*, technical leaflet. Ludwigshafen: BASF AG.

BBP (Babcock Borsig Power) Power Plants (2001). *Gasification Technology*. Company brochure. Oberhausen: BBP.

Becker, J. (1969). Examples for the design of heat exchangers in chemical plants. *Verfahrenstechnik*, 3(8): 335–340.

Beeg, K., Schneider, W. and Sparing, M. (1993). Einfache Bestimmung umweltrelevanter Metallcarbonyle in technischen Gasen mittels Flammen-AAS. *Chemische Technik*, 45(3): 158–161.

Bennett, J.P., Kwong, K-S., Petty, A.V., Powell, C., Thomas, H., and Krabbe, R. (2007), "Field trial results of NETL's phosphate-modified high chrome oxide refractory material for slagging gasifiers". Paper presented at Gasification Technologies Conference, San Francisco.

Bockelie, M.J., Denison, M.K., Chen, Z., Linjewile, T., Senior, C.L., Sarofim, A.F. and Holt, N.A. (2002). "CFD modeling for entrained flow gasifiers". Paper presented at Gasification Technologies Conference, San Francisco.

Boerrigter, H., den Uil, H. and Calis, H.-P. (2002). "Green diesel from biomass via Fischer-Tropsch synthesis: new insights in gas cleaning and process design". Paper presented at Pyrolysis and Gasification of Biomass and Waste. Expert Meeting, Strasbourg.

Camozzi, D., Lucarno, R. and Wolff, J. (2006). "ENI Refining & Marketing Sanazzarro Gasification Plant: Project Update and Start-up Experience". Paper presented at Gasification Technologies Conference, Washington.

Chambert, L. (1993). Device for feeding bulk material into a pressurized space. International Patent PCT WO 93/00282.

Clayton, S.J., Stiegel, G.J. and Wimer, J.G. (2002). *Gasification Technologies: Gasification Markets and Technologies – Present and Future: An Industry Perspective*. Washington, DC: US Department of Energy.

Davey, W.L.E., Taylor, E.L., Newton, M.D., Larsen, P.S. and Weitzel, P.S. (1998). "Atmospheric pressure, entrained-flow, coal gasification revisited". Paper presented at Gasification Technologies Conference, San Francisco.

Dial, R.E. (1974). "Refractories and Insulation". *Industrial Heating*, November 1974.

Dogan, C.P., Kwong, K.-S., Bennet, J.P. Chinn, R.E. and Dahlin, C.L. (2002). "New Developments in Gasifier Refractories". Paper presented at Gasification Technologies Conference, San Francisco.

Gommans, R.J. and Huurdeman, T.L. (1994). "DSM's experience with metal dusting in waste heat boilers". Paper presented at AIChE Ammonia Safety Symposium, Vancouver.

Gorges, I., Renzenbrink, W. and Wischnewski, R. (1998). "Improvements in raw gas cooling for lignite gasification according to the HTW process". Paper presented at IChemE Conference "Gasification: The Gateway to a Cleaner Future", Dresden.

Grabke, H.J., Brach-Troconis, C.B. and Müller-Lorenz, E.M. (1994). Metal dusting of low alloy steels. *Werkstoffe und Korrosion*, 45: 215–221.

Higman, C.A.A. (1994). "Perspectives and experience with partial oxidation of heavy residues." Paper presented at AFTP Conference "L'Hydrogène, Maillon Essentiel du Raffinage de Demain", Paris.

Higman, C.A.A. (2002). "New developments in soot management". Paper presented at IChemE Conference "Gasification: The Clean Choice for Carbon Management", Noordwijk.

Hochman, R.F. (1972). Fundamentals of the metal dusting reaction. In: *4th International Congress on Metal Corrosion*. National Association of Corrosion Engineers (NACE), pp. 258–263.

Hohmann, F.W. (1996). Improve steam reformer performance. *Hydrocarbon Processing*, 75(3): 71–74.

Holt, N.A. (2001a). "Coal gasification research, development and demonstration needs and opportunities". Paper presented at Gasification Technologies Conference, San Francisco.

Holt, N.A.H. (2001b). Integrated gasification combined cycle power plants. In: *Encyclopedia of Physical Science and Technology*, 3rd edn. London: Academic Press.

Hoy, H.R. *et al.* (1965). "Behavior of mineral matter in slagging Gasification Processes". *IGE Journal*, June 1965: 444–469.

IPCS (International Program on Chemical Safety) (1995). *International Chemical Safety Cards ICSC No. 0168 (Iron pentacarbonyl)*. Geneva: ILO.

IPCS (International Program on Chemical Safety) (2001). *International Chemical Safety Cards ICSC No. 0064 (Nickel tetracarbonyl)*. Geneva: ILO.

Keintzel, G. and Gawlowski, L. (1993). "Planung und Auslegung der Dampferzeuger für Kohle-Kombi-Kraftwerke". Paper presented at VGB Conference "Buggenum IGCC Demonstration Plant", Maastricht.

Kerfoot, D.G.E. (1991). Nickel. In: *Ullmann's Encyclopedia of Industrial Chemistry*, 5th edn, vol. A17. Weinheim: VCH Verlagsgesellschaft, p. 191.

Klosek, J., Sorensen, J.C. and Wong, M. (1993). "Air versus oxygen for gasification combined cycle power". Paper presented at VGB Conference "Buggenum IGCC Demonstration Plant", Maastricht.

Koss, U. and Meyer, M. (2002). " 'Zero emission IGCC' with Rectisol technology". Paper presented at Gasification Technologies Conference, San Francisco.

Kriebel, M. (1989). Gas production. In: *Ullmann's Encyclopedia of Industrial Chemistry*, 5th edn, vol. A12. Weinheim: VCH Verlagsgesellschaft, 1989, p. 265.

Lacey, J.A. (1966). The Gasification of Coal in a Slagging Pressure Gasifier. *American Chemical Society Division of Fuel Chemistry Preprints*, 10: 151–167.

Lascelles, K., Morgan, L.G. and Nicholls, D. (1991). Nickel compounds. In: *Ullmann's Encyclopedia of Industrial Chemistry*, 5th edn, vol. A17. Weinheim:VCH Verlagsgesellschaft, p. 239.

Leininger, T. (2002). "Design, fabrication and testing of an infrared ratio pyrometer system for the measurement of gasifier reaction chamber temperature: a status report." Paper presented at the 19th Annual International Pittsburgh Coal Conference, Pittsburgh.

Linzer, V. and Hawg, W. (1975). Temperatur verlauf und Wärmefluss in Stampfmasse und Stift von abgestampften Feuerraumwänden bei Strahlung sheheizung. *Brennstoff-Wärme-Kraft*, 5:206–210.

Lohmann, C. and Langhoff, J. (1982). "The development project 'Ruhr 100' – an advanced Lurgi gasifier". Paper presented at 15th World Gas Conference, Lausanne.

Lorson, H., Schingnitz, M. and Leipnitz, Y. (1995). "The thermal treatment of wastes and sludges with the Noell entrained flow gasifier". Paper presented at IChemE Conference "Gasification: An Alternative to Natural Gas", London.

Marsch, H.D. (1990). "Explosion of synloop ammonia separator." Paper presented at AIChE Ammonia Plant Safety Symposium, San Diego.

McDaniel, J.E. and Hornik, M.J. (2000). "Polk Power Station IGCC: 4th year of commercial operation." Paper presented at Gasification Technologies Conference, San Francisco.

National Association of Corrosion Engineers (1993). "Protection of austenitic stainless steels and other austenitic alloys from polythionic acid stress corrosion cracking during shutdown of refinery equipment". Houston: NACE Standard RP0170-93.

O'Keefe, W. (1994). New feeder helps plant burn more anthracite waste. *Power*, June, 1994.

Partridge, L.J. (1978). Production of ammonia synthesis gas by purification and shift conversion of gas produced from coal. *AMPO*, 78(14):1–6.

Pelofsky, A.H. (1977). *Heavy Oil Gasification*. New York: Marcel Dekker.

Perry, R.H. and Chilton, C.H. (1973). *Chemical Engineer's Handbook*. 5th edn. New York: McGraw-Hill.

Pickrell, G., Zhang, Y. and Wang, A. (2002). "Development of a temperature measurement system for use in coal gasifiers". Paper presented at the 19th Annual International Pittsburgh Coal Conference, Pittsburgh.

Reid, W.T. and Cohen, P. (1944). Factors affecting the thickness of coal-ash slag on furnace-wall tubes. *Transactions of the ASME*, November 1944.

Reimert, R. and Schaub, G. (1989). Gas production. In: *Ullmann's Encyclopedia of Industrial Chemistry*, 5th edn, vol. A12. Weinheim: VCH Verlagsgesellschaft.

Reimert, R. (1981). Schleusen für Druckreatoren-Konzepte und Ausführungen. *Chemie-lngenieur-Technik*, 53(5): 335–344.

Reimert, R. (1986). Schleusen für Druckreatoren-Weiterentwicklungen. *Chemie-lngenieur-Technik*, 58(11): 890–892.

Renzenbrink, W., Wolf, K.-J. and Ewers, J. (2007). "RWE Power's zero-CO_2 IGCC power plant: first steps to commercial implementation". Paper presented at 2nd International Freiberg Conference on IGCC and XtL Technologies, Freiberg.

Rigdon, R. and Avidon, A. (2005). "GE Energy and Bechtel's IGCC reference plant offering". Paper presented at Gasification Technologies Conference.

Rogers, L.H., Bonsu, A.K., Eiland, J.D., Gardner, B.F., Powell, C.A., Booras, G.S., Breault, R.W. and Salazar, N. (2005). "Power from PRB: four conceptual IGCC plant designs using the KBR transport gasifier". Paper presented at 22nd Annual International Pittsburgh Coal Conference, Pittsburgh.

Rutkowski, M.D., Klett, M.G. and Maxwell, R.C. (2002). "The cost of mercury removal in an IGCC plant". Paper presented at Gasification Technologies Conference, San Francisco.

Saunders, T., Aldred, D. and Rutkowski, M. (2006). "Successful continuous injection of coal into gasification and PFBC system operating pressures exceeding 500 psi – DOE funded program results". Paper presented at 7th European Gasification Conference, Barcelona.

Scheibner, B. and Wolters, C. (undated). "Schumacher hot gas filter long-term operating experience in the Nuon Power Buggenum IGCC power plant". Availabe at http://www.osti.gov/bridge/servlets/purl/835771-DcVPP1/native/835771.pdf (retrieved 3 July 2007).

Schingnitz, M., Gaudig, U., McVey, I. and Wood, K. (2000). "Gasifier to convert nitrogen waste organics at Seal Sands, UK". Paper presented at IChemE Conference "Gasification 4 the Future". Nordwijk.

Simbeck, D.R. and Karp, A.D. (1995). "Air-blown versus oxygen-blown gasification". Paper presented at IChemE Conference "Gasification: an Alternative to Natural Gas", London.

Skrzypek, J., Słoczyński, J. and Ledakowicz, S. (1994). *Methanol Synthesis*. Warsaw: Polish Scientific Publishers.

Slack, A.V. and James, G.R. (1974). *Ammonia, Part II*. New York: Marcel Dekker.

Smoot, L.D. (ed.) (1993). *Fundamentals of Coal Combustion for Clean and Efficient Use*. Amsterdam: Elsevier.

Soyez, W. (1988). "Slag-related risks in partial oxidation plants". Paper presented at AIChE Ammonia Safety Symposium, Denver.

Sprouse, K., Mathhews, D.R. and Weber, G.F. (2007). "PWR compact gasifier dry feed system development". Paper presented at 2nd International Freiberg Conference on IGCC and XtL Technologies, Freiberg.

Staudinger, G. and van der Burgt, M.J. (1977). Process for quenching product gas of slagging coal gasifier. US Patent No. 4,054,424.

Strelzoff, S. (1974). Partial oxidation for syngas and fuel. *Hydrocarbon Processing*, 53(12): 79–87.

Stultz, S.C. and Kitto, J.B. (1992). *Steam: Its Generation and Use*. 40th edn. Barberton: Babcock and Wilcox.

Supp, E. (1990). *How to Make Methanol from Coal*. Berlin: Springer.

Trapp, W. (2002). "Eastman coal gasification: 19 years of reliable operation". Paper presented at IChemE Conference "Gasification: the Clean Choice for Carbon Management", Noordwijk.

US Department of Energy (2000). The Tampa Electric Integrated Gasification Combined-Cycle Project: *An Update*. US DOE Topical Report No. 19.

US Department of Energy (2000). *The Wabash River Coal Gasification Repowering Project, Final Technical Report*. US DOE.

US Department of Energy (2002). Available at www.netl.doe.gov/coalpower/environment/mercury/description.html

van der Burgt, M.J. (1978). Apparatus for the supply of fuel powder to a gas-pressurized vessel. US Patent 4,120,410.

van der Burgt, M.J. (1982). Method and device for the feeding of finely divided solid matter to a gas-containing vessel. US Patent 4,360,306.

van der Burgt, M.J. (1983). Pressurizing solids via moving beds. Dutch Patent NETE 0118929.

van der Burgt, M.J. (1990). Process and burner for the gasification of solid fuel. European Patent Specification 0-129-921.

van der Burgt, M.J. (1992). "Techno-historic aspects of coal gasification in relation to IGCC plants". Paper presented at 11th EPRI Conference on Gas-fired Power Plants, San Francisco.

van Liere, J., Bakker, W.T. and Bolt, N. (1993). "Supporting research on construction materials and gasification slag". Paper presented at VGB Conference "Buggenum IGCC Demonstration Plant", Maastricht.

van Loon, W. (1952). "De vergassing van koolstof met zuurstof en stoom". {The gasification of carbon with oxygen and steam}. PhD dissertation, Delft University.

Visconty, G.J. (1956). Method of transporting powder into advanced pressure zone. US Patent 2,761,575.

Weigner, P., Martens, F., Uhlenberg, J. and Wolff, J. (2002). "Increased flexibility of Shell Gasification Plant". Paper presented at IChemE Conference "Gasification: The Clean Choice for Carbon Management", Noordwijk.

Weiss, M.M. (1997). "Selection of the acid gas removal process for IGCC applications". Paper presented at IChemE Conference "Gasification Technology in Practice", Milan.

Wildermuth, E., Stark, H., Ebenhöch, F.L., Kühborth, B., Silver, J. and Rituper, R. (1990). Iron compounds. In: *Ullmann's Encyclopedia of Industrial Chemistry*, 5th edn, vol. A14. Weinheim: VCH Verlagsgesellschaft, p. 596.

Wilhelm, S.M. (1990). "Effect of mercury on engineering materials used in ammonia plants". Paper presented at AIChE Ammonia Plant Safety Symposium, San Diego.

Zuideveld, P.L. (2005). "Shell Gasification Process using low-rank coal". Paper presented at Gasification Technologies Conference, San Francisco.

This page intentionally left blank

Chapter 7

Applications

7.1 CHEMICALS

The two chief components of synthesis gas, hydrogen and carbon monoxide, are the building blocks of what is often known as C1 chemistry. The range of products immediately obtainable from synthesis gas extends from bulk chemicals like ammonia, methanol and Fischer-Tropsch products, through industrial gases to utilities such as clean fuel gas and electricity. Furthermore, there are a number of interesting by-products such as CO_2 and steam. As can be seen from Figure 7.1, many

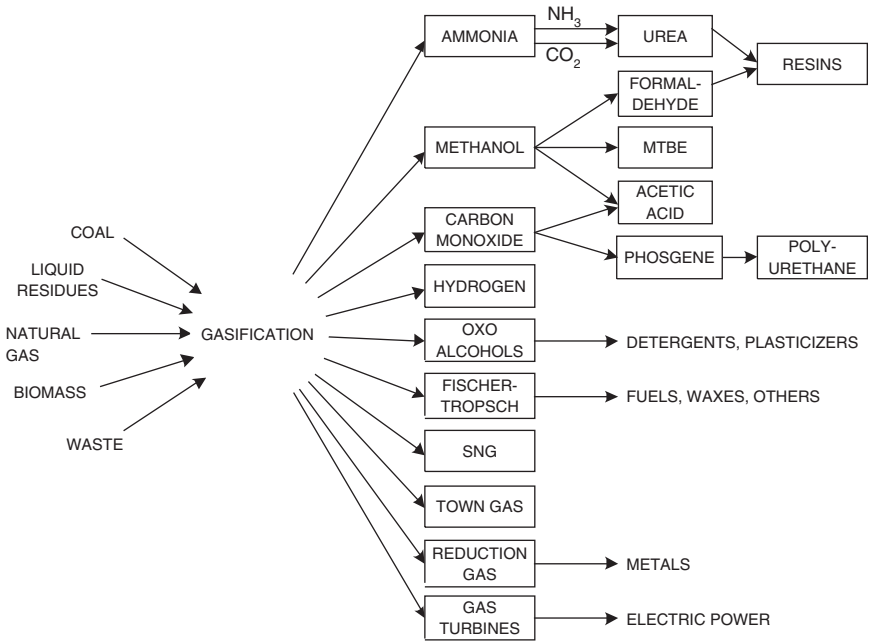

Figure 7.1 Applications for synthesis gas.

of these direct products are only intermediates towards other products closer to the consumer market, such as acetates and polyurethanes.

Synthesis gas is an intermediate that can be produced by gasification from a wide range of feedstocks and can be turned into an equally wide range of products. Although every combination of gasifier feed and end product is theoretically possible, this does not mean that every combination makes economic or even technical sense. In North Dakota, synthesis gas generated from coal is successfully processed to manufacture synthetic natural gas (SNG). In Malaysia, partial oxidation of natural gas is used to generate the synthesis gas feed for a synthetic liquid fuels operation. Yet it would clearly make no sense to generate synthesis gas by partial oxidation of natural gas to manufacture SNG.

Given that this broad range of products is available from the single intermediate of synthesis gas, there is no technical reason why more than one product could not be produced from the same gas source. In fact, many operators of gasification plants do precisely this. This is known, in an analogy with co-generation (electricity and heat), as polygeneration. Some even go a step further and install surplus downstream capacity compared with the available syngas generation capacity. In this manner, such operators are able to "swing" production from one product (say, ammonia) to another (say, methanol), or peak power in accordance with market demand, and are thus in a position to optimize revenue from the gasification plant. In a reverse manner, there are other operators using different feedstocks and even, where appropriate, different technologies to generate their syngas. In such a case, the opportunity is to work with the cheapest feedstocks, topping up with more expensive ones only as required.

This inherent flexibility associated with syngas production and use provides a multitude of choices that is increased by the variety of utility systems, in particular the broad possibilities for steam system configuration. It is therefore useful to look at some typical gas-processing designs for a number of the commoner applications and review the considerations behind them.

7.1.1 Ammonia

Market

Over 90% of the world's ammonia production capacity of 160 million t/y in 2001 was based on steam reforming of natural gas or (in India) naphtha. Almost all the rest, some 10 million t/y, was based on gasification of either coal or heavy oil.

The worldwide production of ammonia is, by most measures, the largest of any bulk chemical. The principle use of ammonia is as nitrogenous fertilizer for agriculture.

Typical plant sizes today are 1500–2000 t/d. Process licensors are currently revealing plans for plants of up to 4000 or 5000 t/d size (Davey *et al.*, 2003; Parkinson, 2001).

Synthesis gas specification

Ammonia synthesis takes place at high pressure over a catalyst that is usually iron, although one process uses ruthenium. The ammonia synthesis reaction is:

$$N_2 + 3H_2 \leftrightarrows NH_3 \qquad -92\ \text{MJ/kmol}\ N_2 \tag{7.1}$$

A typical specification for ammonia synthesis gas is (Mundo and Weber, 1982):

N_2:H_2	1 : 3	(For some modern processes nitrogen excess is required)
$CO + CO_2$	<30 ppm	(As sum of total oxygen containing species)
H_2O		(In principle as for CO and CO_2, but it can be washed out with product ammonia in the synthesis unit itself)
Sulfur	<1 ppm	
Phosphorus, arsenic, chlorine		(These are also poisons. Appl (1999) gives an upper limit of 0.1 ppm for chlorine)
Inerts (including methane)	<2% minimum	

Ammonia plants based on gasification technologies normally surpass these specifications, when a liquid nitrogen wash is the last stage of purification.

Most ammonia plants are built in conjunction with urea plants, the CO_2 from the ammonia plant being used directly for urea production. According to the reaction:

$$2NH_3 + CO_2 \leftrightarrows NH_2CONH_2 + H_2O \tag{7.2}$$

1 mole of CO_2 is required for every 2 moles of ammonia. Typical requirements for the CO_2 are as follows:

CO_2	>98.5 mol%
$H_2S + COS$	<2 mg/Nm³
H_2	<0.15 mol%
Methanol	<10 ppmv

Design considerations

To process a raw synthesis gas to conform to this specification, a number of different tasks must be completed:

- Tar and volatiles removal (if present in raw gas)
- Desulfurization

- CO shift ($CO + H_2O \Rightarrow H_2 + CO_2$)
- CO_2 removal
- Final removal of carbon oxides and water
- Adjustment of $N_2 : H_2$ ratio.

The order in which these tasks are performed may be modified to the extent that there is a choice between performing the desulfurization before or after CO shift. Whereas older plants may have used a copper liquor wash for CO removal, almost all modern gasification-based plants combine the tasks of CO removal and nitrogen addition in a liquid nitrogen wash. There are a few examples where PSA has been used for final purification of the hydrogen stream. In addition, the gas needs to be compressed to the operating pressure of the synthesis, which can vary between 90 and 180 bar.

Prior to developing a block flow diagram, two (or perhaps three) key decisions have to be taken. First a decision on the overall *pressure profile* of the plant is necessary. In general, there is an energy advantage to running the gasifier at the highest possible pressure, since the energy required to compress the synthesis gas is considerably more than that required for compression of the feed materials. However, there are three variables that must be considered:

- *The maximum pressure of the gasifier selected.* With oil feed GEE has numerous references with 80 bar gasification. Shell can also operate SGP at this pressure, but generally recommends operation at closer to 60 bar to reduce organic acid formation in the system. For coal gasifiers, current commercial experience is limited to 65 bar.
- *The oxygen compression system.* Here the choice is between compression of gaseous oxygen and liquid oxygen pumping. Many 900 t/d or larger ammonia plants operating with a gasifier at 60 bar have centrifugal compressors. Significantly smaller plants than this would require the use of a reciprocating machine with installed spare. Most of the 80 bar plants use liquid oxygen pumping. The overall compression energy demand for liquid pumping (i.e. air plus oxygen plus nitrogen) is some 3–7% higher than for the equivalent compression system. This cancels some of the syngas compression advantages of an 80 bar system. There are some safety arguments claimed in favor of liquid pumping, but the excellent record of oxygen turbo-compressors in this service does not argue against their use. All in all, there is not that much to choose between the two systems.
- *The synthesis pressure.* In the 1970s and 1980s, typical operating pressures in ammonia synthesis were 220 bar. Today, most plants using conventional magnetite catalyst are designed to operate at 130–150 bar, occasionally up to 180 bar. Kellogg now uses a ruthenium catalyst operating at about 90 bar. The energy demand for the synthesis does not change much over the range 130–180 bar, since syngas compression gains made by operating at the lower pressure tend to be compensated for

by an increased refrigeration demand. Furthermore, at higher pressures the volume of catalyst can be reduced, making the converter smaller and, despite the increased design pressure, also cheaper. Often, therefore, the optimization consists of selecting pressure levels for the gasifier and synthesis loop that minimize the number of casings on the synthesis gas compressor, but exploit that minimum number to the maximum extent.

- An additional factor to be aware of, even if it will not substantially influence the choice of operating pressure, is that with increased pressures physical solvents for desulfurization and CO_2 removal, gas losses through co-absorption of CO and H_2 will tend to increase. In the range up to 80 bar, however, this remains within acceptable limits.

The second important decision is the selection of acid gas removal system and its integration with the CO shift.

- When reviewing alternative gas treatment systems, the one immutable parameter is the specification of the syngas. For ammonia production from gasification it is not only a matter of eliminating carbon oxides, as is the case downstream of a steam reformer. It is necessary to remove other components, some of which are general to all gasification systems (such as ammonia and HCN), and others of which may be feedstock- or gasifier-specific, such as the hydrocarbons produced by low-temperature gasifiers. The system that has proved itself capable of producing on-specification gas behind practically all gasification processes is Rectisol, which uses cold methanol as wash liquor. As a low-temperature process, Rectisol is expensive. However, in the ammonia environment this is not as serious as in other applications, since a number of synergies can be achieved. All ammonia syntheses use some refrigeration to condense the ammonia from the loop gas, and the product ammonia is often stored in low-pressure tanks at a temperature of −33°C. The integration of the refrigeration systems for Rectisol and ammonia synthesis allows some savings compared with the stand-alone case.

  Similarly, it is possible to integrate the refrigeration demand of Rectisol and the liquid nitrogen wash, which operates at a temperature of −196°C.

  An additional advantage of a physical wash is that CO_2 required for urea production can in part be recovered under pressure, thus saving energy in CO_2 compression.
- One solution that is typical for use in conjunction with a syngas cooler is an immediate desulfurization of the raw gas. After desulfurization, the gas is "clean" but also dry. In order to perform the CO shift reaction, it is necessary to saturate the gas with water vapor in a saturator tower using water preheated by the exit gas of the shift converter. CO_2 removal takes place in a separate step. The gas has thus to be cooled and reheated twice in the process of acid gas removal and CO shift. The necessary heat-exchange equipment incurs considerable expense and causes pressure drop – a fact that has to be counted as a disadvantage of this system.

The raw gas from gasification of a typical refinery residue can contain about 1% H_2S and, say, 4% CO_2. A simple desulfurization of this raw gas will provide a sour gas of about 25% H_2S, sufficient for direct treatment in an oxygen-blown SRU. Concentration of the H_2S content up to 50% does not require much additional expense. Furthermore, the CO_2 formed in the subsequent shift is free from sulfur and can be used for urea production or emitted to the atmosphere without further treatment.

- When operating with a quench gasifier, the gas emerges saturated with water vapor at about 240°C. This temperature is too low to be able to generate high-pressure steam, so it makes sense to utilize the water vapor immediately in a raw gas shift. In addition to saving the saturator tower, this has a number of minor advantages – for example, that COS in the raw gas is also converted to H_2S, and that HCN is hydrogenated to ammonia (BASF, undated). The sour gas components, H_2S and CO_2, are then removed in a single step. Attractive as this appears, it is not without its difficulties. In this case, the "natural" sour gas has an $H_2S:CO_2$ ratio of about 1:50. This requires considerable expense to concentrate the H_2S to an acceptable level for a Claus furnace and to clean the CO_2 before emission to the atmosphere.

Ultimately, however, there is not much to choose between these two systems. A detailed study performed in 1971 (Becker *et al.*, 1971) compared a 60 bar scheme using syngas cooling and clean gas shift with a 90 bar scheme using quench and raw gas shift. It showed very little difference between the two routes. There was a slight energy advantage for the syngas cooler route, and the difference in investment amounted to only 2% – lower than the estimating tolerance. This result continues to be valid to this day, as can be judged by the commercial and operating success of both schemes.

Example

In order to elucidate these matters in more detail, we provide a worked example of a 1000 t/d ammonia plant based on heavy oil feed and using a syngas cooler and clean gas shift. Based on the selected gasifier pressure of 70 bar and an overall pressure drop of 15 bar over the gas treatment train, the syngas compressor suction would be 55 bar. This would allow a synthesis loop at 135 bar. For the sake of the example, it is assumed that a liquid oxygen pump will be applied.

Before entering into a detailed description of the block diagram in Figure 7.2, there are a number of further design considerations that need reviewing:

- *Oxygen quality*. Considering the fact that the final ammonia synthesis gas contains 25 mol% nitrogen, it is worth reviewing the extent to which this could and should be brought into the system with the oxygen. The energy required for oxygen production shows a flat minimum between about 90 and 95% purity. On the

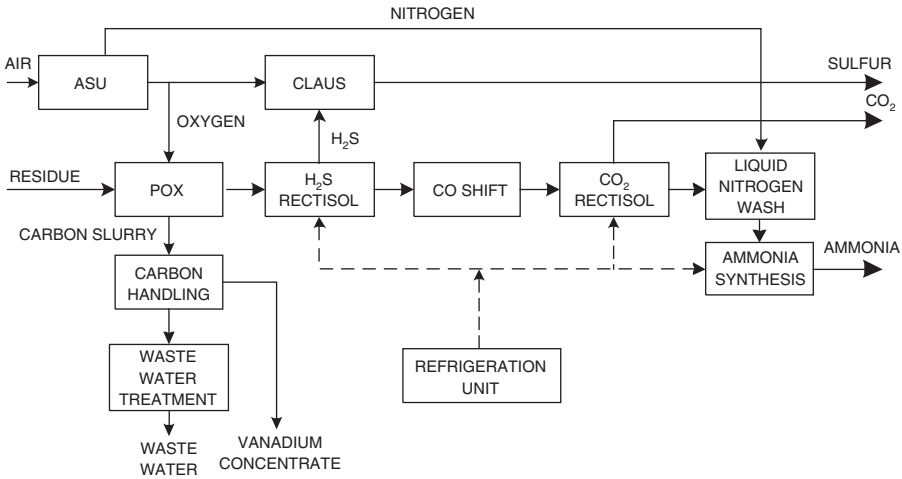

Figure 7.2 Residue-based ammonia plant.

other hand, an increase of nitrogen in the oxygen decreases the cold gas efficiency or yield of $H_2 + CO$ per kg residue. A detailed study will show an optimum at around 95% O_2. This conclusion is also valid for an IGCC application, where nitrogen in the gas turbine burner is anyway required for NO_x suppression. For many other chemical applications (e.g. methanol), however, this would not be true, since N_2 is an unwanted inert in the synthesis loop.

- *Steam system*. The high-pressure steam must, for safety reasons, be capable of entering the gasification reactor under all conditions, and it is logical to generate steam in the syngas cooler at the same selected pressure. For our example plant, we will use 100 bar as the saturation pressure of the high-pressure steam and allow a pressure drop of 8 bar across the superheater and controls. Provision will be made for 25 bar medium-pressure steam and 10 bar low-pressure steam.
- *Compressor drivers*. With a syngas cooler installed after the gasifier, there is usually sufficient high-pressure steam to satisfy the demand of the CO shift, the syngas compressor and the nitrogen compressor. An external energy source is required for the air compressor and (in this case) the nitrogen circulator required for oxygen evaporation in the ASU. In the event of using an oxygen compressor, this would substitute for the latter. An external energy source is also required for a refrigeration compressor. Generally, two alternatives are available; electric power (provided the grid is stable enough to cope with starting a 12 MW electric motor) and steam (generated in an auxiliary boiler on site). This is an economic decision, but it should be borne in mind that start-up steam is required in any case. Furthermore, having a substantial boiler in operation all the time can help in stabilizing the overall steam system.

- *Refrigeration system*. The ammonia synthesis will require refrigeration capacity at, typically, about 0°C. For final product cooling to atmospheric storage and for the Rectisol acid gas removal unit, additional refrigeration capacity at about −33°C is required. Ammonia compression and absorption systems are available for this duty. Absorption systems are generally more expensive in capital cost, but they can operate on low-level waste heat which might otherwise remain unrecovered. Studies performed in the context of ammonia plants like our example have shown that it is more economical to use waste heat in boiler feedwater preheat than in absorption refrigeration. On the other hand, if the waste heat really is "waste", then it pays to invest in an absorption system. Not only have both systems been used in various locations, but they have also been built in combination, where an absorption system was used to bring the refrigerant to 0°C and a booster compressor was used for the −33°C duty.

Looking at the results of this discussion in Figure 7.2, together with the material balance in Table 7.1, we see the following.

Oxygen and nitrogen are manufactured in the ASU, where the compressors are all driven by condensing steam turbines. The oxygen is pumped in the liquid phase to a pressure of 80 bar and evaporated with gaseous nitrogen, which returns the cryogenic energy to the cold box. The vacuum residue is gasified in the partial oxidation reactor with oxygen and steam at 60 bar and about 1300°C. The raw gas from the reactor contains soot and ash, which is removed in a water wash.

The raw gas, freed of solid matter, is cooled down to about −30°C in the Rectisol unit, where it is washed with cold methanol to give a residual total sulfur content of less than 100 ppb. The sulfur-free gas is then heated up and saturated with water at about 220°C in a saturator tower in the CO shift. Additional steam is added that reacts over the catalyst with carbon monoxide to form hydrogen and CO_2. The gas at the outlet of the CO shift has a CO slip of about 3.2% and a CO_2 content of about 34%. This gas re-enters the Rectisol unit and is washed again with cold methanol, this time at about −60°C. The CO_2 content is reduced to about 10 ppm. The resulting gas is a raw hydrogen with about 92% H_2 and about 5% CO, the rest being nitrogen, argon and methane. This gas is cooled down to about −196°C and washed with liquid nitrogen. Simultaneously, the amount of nitrogen required for the ammonia synthesis is added. The gas is then compressed to the pressure required for the synthesis loop.

The mass balance in Table 7.1, based on gasifying 32.06 t/h visbreaker residue in the partial oxidation unit to produce 1000 t/d ammonia, illustrates this gas treatment scheme. The feed quality is as described in Table 4.10.

7.1.2 Methanol

Market

Approximately 3.3 million metric tonnes per year, or about 9% of the estimated world methanol production, is based on the gasification of coal or heavy residues.

Table 7.1
Mass balance for 1000 t/d ammonia plant

		Oxygen	Steam	Raw gas	Desulf. gas	Sour gas	Shift gas	Raw H_2	Pure CO_2	N_2 to LNW	NH_3 syngas
CO_2	mol%			3.67	4.16	66.71	33.82	0.00	99.96		
CO	mol%			49.28	49.46	4.37	3.20	4.74	0.02		
H_2	mol%			45.65	45.92	0.88	62.66	94.81	0.02		75.00
CH_4	mol%			0.27	0.27	0.08	0.19	0.26			
N_2	mol%	0.10		0.09	0.09	0.02	0.06	0.09		100.00	25.00
Ar	mol%	0.40		0.10	0.10	0.00	0.07	0.10			
H_2S	mol%			0.90		26.75					
COS	mol%			0.04		1.19					
O_2	mol%	99.50									
H_2O	mol%		100.00								
Dry gas	kmol/h	1014	801	4250	4223	143	6116	3940	496	1321	4942
Pressure	bar	65	72	55.1	52.5	1.5	49.5	47.6	1.5	50.0	44.5
Temp.	°C	120	380	45	35	10	45	−60	20	45	35

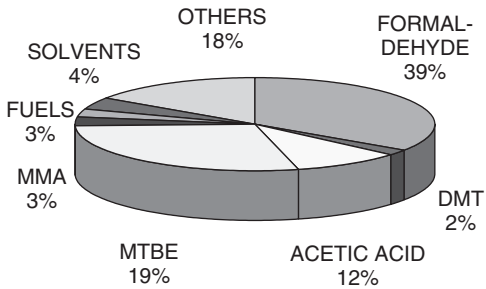

Figure 7.3 Relative consumption of methanol by usage (source: Methanol Institute website, 2007).

Methanol is an important intermediate and, as can be seen from Figure 7.3, over half of the production goes into the manufacture of formaldehyde and MTBE (methyl tertiary-butyl ether). The demand for methanol has varied substantially from year to year, creating some dramatic price swings when supply has failed to keep up with demand. At the time of writing, the future of MTBE as a component in reformulated gasoline is still uncertain, and this has its effects on the market.

During the 1990s, the typical size of world-scale natural gas-based plants increased from 2000 to about 3000 mt/d. Current designs go up to 5000 t/d (Göhna, 1997), and several plants of this size are now in operation. Most plants based on gasification technologies are somewhat smaller. The largest, in the Leuna refinery in Germany, has a nameplate capacity of 2060 mt/d.

Synthesis gas specification

Methanol synthesis takes place by the reaction of hydrogen with carbon oxides according to the following reactions:

$$CO + 2H_2 \Rightarrow CH_3OH \qquad -91\ \text{MJ/kmol} \tag{7.3}$$

and

$$CO_2 + 3H_2 \Rightarrow CH_3OH + H_2O \qquad -50\ \text{MJ/kmol} \tag{7.4}$$

Modern low-pressure methanol synthesis takes place today at a pressure between 50 and 100 bar over a copper catalyst. An ideal synthesis gas specification is:

CO_2	3%	
$\dfrac{(H_2 - CO_2)}{(CO + CO_2)}$	2.03	(Stoichiometric Ratio = SR)
H_2S	<0.1 ppm	
Inerts (including methane)	Minimum	

Table 7.2
Comparison of methanol synthesis gas analyses

Process		Conventional reforming	Combined reforming	Gasification
Feedstock		**Natural gas**	**Natural gas**	**Heavy residue**
CO_2	mol%	7.30	7.68	3.52
CO	mol%	16.80	21.62	27.86
H_2	mol%	72.10	67.78	67.97
CH_4	mol%	3.70	2.84	0.21
Inerts	mol%	0.10	0.08	0.44
$\frac{H_2 - CO_2}{CO + CO_2}$		2.7	2.05	2.05

For the methanol synthesis, it is important to recognize that the above specification for the stoichiometric ratio ($SR = (H_2 - CO_2)/(CO + CO_2)$) and carbon dioxide content represent an optimized synthesis gas. This is not the quality produced by the majority of plants using steam reforming of natural gas, as shown in Table 7.2.

The data in Table 7.2 show that the conventional steam reforming process operates with a considerable hydrogen surplus ($SR = 2.7$) and high CO_2 content. Combined reforming using a steam reformer with an oxygen-blown secondary reformer is able to supply an optimized stoichiometric ratio, but it still has a high CO_2 content. Since the conversion rate of CO_2 is considerably less than that of CO, it is preferable to keep the CO_2 content low if reasonably possible; however, a small amount of CO_2 is required to ensure a high CO conversion. The optimum CO_2 content lies between 2.5 and 3.5 mol%.

The above considerations all apply to conventional gas-phase methanol synthesis processes. A liquid-phase methanol synthesis process has been developed and demonstrated at commercial scale, which is more flexible and can accept a gas richer in CO than gas-phase processes (US Department of Energy, 2006).

Supp (1990) provides a detailed explanation for the optima for gas phase processes in his work *How to Make Methanol from Coal*, so these aspects of methanol synthesis will only be touched upon here. Furthermore, he has described the manufacture of methanol from coal in considerable depth, and those interested in the topic are referred to his work. As a practical example, we will therefore review the process of making methanol from petroleum residues.

Design considerations

The main considerations to be applied in developing a synthesis gas production scheme for methanol manufacture are the same as for ammonia – namely selection

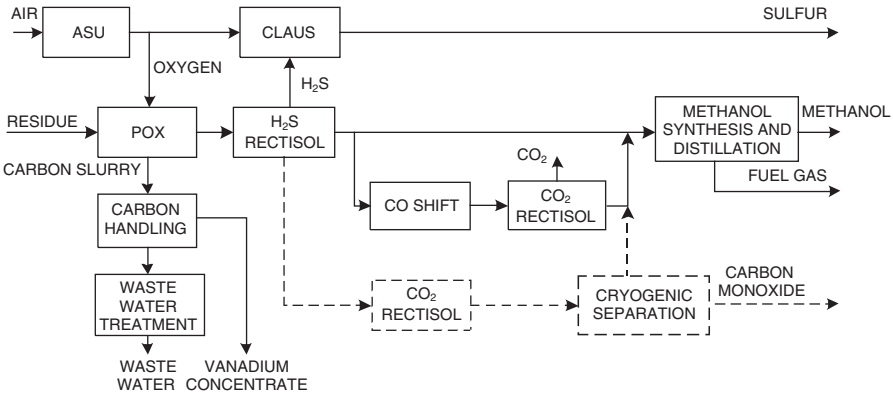

Figure 7.4 Residue-based methanol plant.

of gasification pressure, syngas cooling arrangement, and acid gas removal system. Contrary to the ammonia case, the optimization of oxidant quality is not a consideration, since any inerts in the syngas lower the conversion in the synthesis. The oxygen should simply be as pure as reasonably possible, which in effect means 99.5% purity.

- The selection of the exact pressure to run the methanol synthesis loop will depend on an OPEX/CAPEX optimization. For medium-size units of, for instance, 600 t/d, the loop would operate at about 50 bar – that is, without any intermediate syngas compression. For a large unit of, say, 2000 t/d, the pressure would be somewhat higher. The principles are shown in Figure 7.4. For the smaller unit, the clean gas from the CO_2 removal unit is fed to the suction side of the loop gas circulator, while the CO shift bypass gas has sufficient pressure to enter the loop on the discharge side. For the larger plant, the gases are mixed together at the suction of the booster compressor.
- For the production of CO-rich gases, the use of a syngas cooler is usually the better gas cooling selection. It provides an efficient use of the sensible heat in the raw gas leaving the gasifier, where the production of steam required for CO shift in a quench is of no advantage. The methanol case lies halfway between the extremes of all hydrogen and all CO production, in that about 50% of the gas must be shifted. In most actual plants, the syngas cooler option is used for the whole raw gas stream and a portion of the desulfurized gas is passed over a shift catalyst. It is, however, possible to divert some of the gas from a quench reactor into a syngas cooler, employing a so-called combi-reactor, and to use a raw gas shift (Jungfer, 1985). For our example, we will cool all the gas as described above.
- As with ammonia, Rectisol is the most advantageous acid gas removal system. It is the only wash that will achieve the desired degree of desulfurization. Alternative systems would require an additional stage of COS hydrogenation and a subsequent zinc oxide bed for final clean-up. In the case of a methanol plant,

Rectisol has the added advantage that the wash liquor is the plant product itself, thus enabling some saving of infrastructure (although it should not be overlooked that an inventory tank for H_2S- or CO_2-contaminated methanol is still required).

It is worth pointing out that the use of an optimized synthesis gas quality also influences the choice of synthesis technology. Methanol formation from CO has a significantly higher heat of reaction than that from CO_2. The higher proportion of methanol produced from CO when using syngas from coal or oil gasification means that in such a plant more attention must be paid to the issue of heat removal than, for instance, in a steam reformer-based plant. It is necessary not only to remove the larger quantity of heat, but also to perform this in a manner that prevents the slightest local overheating in order to avoid by-product formation, since the production of impurities from side reactions increases with increasing temperature. The intense and intimate cooling provided by the boiling water in an isothermal reactor has therefore made it the preferred reactor system for gasifier-based methanol plants. Over 90% of gasification-based methanol production operates with isothermal reactors. This includes all the large-capacity units.

The above applies for gas phase syntheses. A demonstration liquid-phase synthesis has been built at the Eastman plant in Tennessee, which is also reported to be giving good service (Benedict *et al.,* 2001).

Example

The block flow diagram for a 1000 t/d methanol plant based on gasification of 29.5 t/h visbreaker residue in Figure 7.4 shows the result of these deliberations. The mass balance is given in Table 7.3. The residue, with quality as in Table 4.10, is gasified in the POX unit with 99.5% purity oxygen at a pressure of 60 bar. The raw gas is then desulfurized in a Rectisol wash to a residual total sulfur level of less than 0.1 ppm. Approximately 50% of the desulfurized gas is subjected to a CO shift and CO_2 removal in a second Rectisol stage, providing raw hydrogen with sufficient CO_2 slip to meet the overall synthesis gas specification. This gas is fed to the circulator of the methanol synthesis loop at a pressure of 48.8 bar. The remainder of the desulfurized gas contains about 48% CO and has a pressure of 52.5 bar. This gas is then added to the loop on the discharge side of the circulator. The exact ratio of the two streams of desulfurized gas is controlled to maintain the correct stoichiometric ratio.

The dotted lines in Figure 7.4 show an alternative means of adjusting the H_2, CO and CO_2 flows to maintain the synthesis gas specification, which is particularly appropriate in an environment where the methanol is utilized for acetyls production. Instead of converting CO to hydrogen in the shift unit, CO is removed from part of the desulfurized gas in a cryogenic unit and recovered as pure CO for acetic acid production. In this case, all the residual CO_2 in the desulfurized gas must be removed in an additional stage of the Rectisol unit prior to cryogenic treatment.

Table 7.3
Mass balance for 1000 t/d methanol plant

		Oxygen	Steam	Raw gas	Desulf. gas	Sour gas	Shift bypass	Shift feed	Shift gas	Raw H_2	MeOH syngas
CO_2	mol%			3.67	2.73	66.71	2.73	2.73	33.17	4.29	3.50
CO	mol%			49.28	50.20	4.37	50.20	50.20	3.20	4.50	27.59
H_2	mol%			45.65	46.60	0.88	46.60	46.60	63.31	88.31	67.24
CH_4	mol%			0.27	0.28	0.08	0.28	0.28	0.19	1.46	0.86
N_2	mol%	0.10		0.09	0.09	0.02	0.09	0.09	0.06	0.57	0.33
Ar	mol%	0.40		0.10	0.10	0.00	0.10	0.10	0.07	0.87	0.48
H_2S	mol%			0.90	0.00	26.75	0.00	0.00			
COS	mol%			0.04	0.00	1.19	0.00	0.00			
O_2	mol%	99.50									
H_2O	mol%		100.00								
Dry gas	kmol/h	965	738	3905	3823	131	2021	1802	2623	1978	3999
Pressure	bar	65	72	55.1	52.5	1.5	52.5	52.5	49.5	48.8	48.8
Temp.	°C	120	380	45	25	10	25	25	45	25	35

7.1.3 Hydrogen

Market

The market for hydrogen is extremely diversified. The type of industry served ranges from petroleum refiners with plants varying in size from 20,000–100,000 Nm^3/h to the food industry with requirements in the range of 1000 Nm^3/h or less. Similarly, feedstocks and technologies vary widely, the largest plants being based on steam reforming of natural gas or resid gasification. At the smaller end of the scale, steam reformers can still hold their own, but methanol or ammonia cracking and hydrolysis of water are also commercially available. An additional source is as a by-product of chlorine production. Inside refineries, much of the hydrogen demand is met from the naphtha reformer.

The estimated total world hydrogen production (excluding ammonia and methanol plants as well as by-product hydrogen) is about 16 million Nm^3/h. Of this, over 500,000 Nm^3/h is produced by gasification. Practically all the gasification-based hydrogen production falls into the category of "large plants", having capacities of 20,000 Nm^3/h upwards. One of the largest is Shell's 112,000 Nm^3/h facility in its Pernis (The Netherlands) refinery. In China, two 2200 t/d coal gasifiers are under construction to supply about 170,000 Nm^3/h of hydrogen to a large direct coal liquefaction plant. This reflects current economics, and in particular the opportunities for resid-based hydrogen production in refineries. However, this must not always remain true. With the development of biomass gasification systems, at present being considered mainly for power applications, gasification of locally produced biomass might one day compete with methanol or ammonia cracking as a source for small quantities of hydrogen for the food-processing industry in rural areas without natural gas supply. For our example of a hydrogen plant we will look at a typical large-scale refinery application.

Hydrogen specification

Just as the range of hydrogen consumers is wide, so is the demand on quality. Typical specifications are:

For silicon wafer production	99.9999%
For optic-fiber cable production	99.99%.

In the refinery environment, it is necessary to define the quality of the hydrogen product on a case-by-case basis. Many hydrocracking processes will accept a 98% H_2 purity, which can be produced by the traditional shift, CO_2 removal, and (if required) methanation route. A number of processes do, however, require higher purities of 99% H_2 or greater, in which case the final purification step will have to be pressure swing adsorption (PSA). The higher purity is, however, achieved at the

cost of a lower hydrogen yield (about 85–90% instead of 98%) and the production of a relatively large quantity of low-pressure, low-Btu fuel gas that it may or may not be possible to accommodate in the refinery fuel gas balance. It is important in this context to review the hydrogen purity specification carefully with the hydrocracker requirements, since all too often a purity of >99.5% is specified on the basis of the economics of the conversion unit alone, or on the assumption that hydrogen will be generated from a steam reformer which can accommodate the PSA tail gas internally, without reference to the economics of the overall configuration. A careful review of site-specific parameters will produce different solutions. Thus, for instance, the Pernis plant uses the methanation route; others use PSA units (de Graaf *et al.*, 1998; Kubek *et al.*, 2002).

Design considerations

Many of the design considerations required for the design of a hydrogen plant are similar to those discussed earlier in the ammonia and methanol cases (sections 7.1.1 and 7.1.2, respectively), so these will not be repeated here. Specific to hydrogen manufacture are the following:

- Generally in a refinery, particularly one where the product slate is favorable to the use of gasification, the hydrogen consumers, hydrocracker or hydrotreater, operate at high pressures. PSA units can operate over a wide pressure range of about 20–70 bar. However, at the higher end of this pressure range co-adsorption of the hydrogen increases, with a consequent drop in yield. On the other hand, operation at a high gasifier pressure can provide significant savings in compression energy. Thus the pressure selection is a matter for optimization studies on a site-specific basis.
- As for ammonia, the decision on the process for the syngas cooling and CO shift (quench plus raw gas shift versus syngas cooler plus clean gas shift) is finely balanced. Issues such as on-site energy-integrated or offsite stand-alone oxygen production can tip the scales in one direction or the other. For our example we will use raw gas shift, so as to contrast with the clean gas shift used above for ammonia – not a real-life criterion!

  If the clean gas shift route is chosen, then the question often arises; it is necessary to include a CO_2 wash upstream of a PSA unit? This question must be answered in the affirmative, at least as a bulk removal, even though in a steam reformer plant this practice is seldom (if ever) applied. The reason lies in the quantity of CO_2 to be removed. Examination of the shift gas quality in such a plant (similar up to this point to the ammonia plant) shows a CO_2 content of over 30 mol%. Feeding such a gas to the PSA unit has two deleterious effects: first, the hydrogen yield of the PSA drops from, say, 85% to about 70%; secondly, the tail gas contains some 60% CO_2 and has a heating value of about 4500 kJ/Nm³ (LHV), requiring the use of a support fuel to combust it satisfactorily.

- For the desulfurization, a Selexol wash has been chosen. As a physical wash, it has many of the same characteristics as the Rectisol process used in the previous examples. It has the advantage of operating at ambient or near-ambient temperatures, thus eliminating the refrigeration load of the Rectisol unit. The disadvantage that Selexol would have in handling unshifted gas, namely its poorer COS solubility, is of no import in the shift gas case, since the COS is already largely converted to H_2S on the shift catalyst. Selexol is able to concentrate the sour gas stream to an acceptable level for processing in a Claus sulfur recovery unit. (Kubek *et al.*, 2002)
- The use of membrane technology is a worthwhile additional consideration in multi-product plants, where hydrogen is only a small part of the overall product slate. One example is shown in section 7.1.4. Another could be a side stream of hydrogen coming from an IGCC plant, such as those discussed in section 7.3.
- A further aspect to consider if refrigeration is required for acid gas removal is the choice of refrigerant. In the ammonia plant, it is natural to use ammonia as refrigerant. In the refinery, it may be an unfamiliar medium. An alternative in such a situation would be propane or propylene, fluids with which the refinery operator will be familiar and for which no unit-specific additional safety measures are required.

Example

The resultant flow diagram and mass balance for a 50,000 Nm³/h hydrogen plant are shown in Figure 7.5 and Table 7.4, respectively 20.42 t/h visbreaker residue, as described in Table 4.10, is gasified in a quench reactor. The gas leaves the reactor

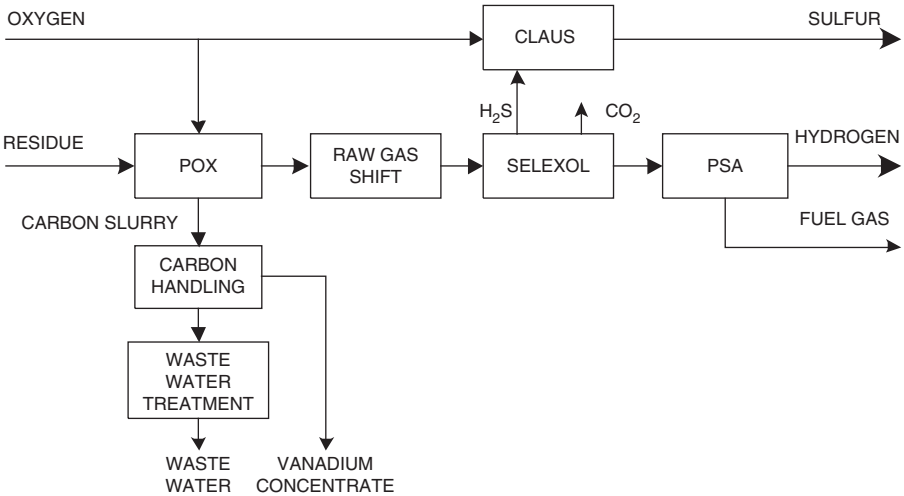

Figure 7.5 Residue-based hydrogen plant.

Table 7.4
Mass balance for 50 000 Nm³/h hydrogen plant

		Oxygen	Steam	Raw gas	Shift gas	Desulf. gas	Sour gas	CO_2 vent	Pure H_2	PSA tail gas
CO_2	mol%			3.67	35.16	5.28	29.12	94.92		33.43
C	mol%			49.28	0.50	0.72		0.07		4.57
H_2	mol%			45.65	63.40	93.57		4.96	99.99	59.27
CH_4	mol%			0.27	0.18	0.26		0.03		1.63
N_2	mol%	0.1		0.09	0.06	0.09	17.69			0.55
Ar	mol%	0.4		0.09	0.06	0.09		0.01		0.54
H_2S	mol%			0.90	0.63	0.00	52.59			
COS	mol%			0.04	0.00	0.00	0.35	4 ppm		
O_2	mol%	99.5					NH_3 0.25			
H_2O	mol%		100.0							
Dry gas	kmol/h	646	510	2708	4022	2649	48	977	2232	417
Pressure	bar	73	72	60	55	53	2.1	1.5	52	1.3
Temp.	°C	120	380	240	35	35	45	24	25	25

at a temperature of 240°C saturated with water vapor. In this condition, it is passed over the raw gas shift catalyst. In addition to the CO shift reaction:

$$CO + H_2O \leftrightarrows CO_2 + H_2 \tag{2.7}$$

COS is shifted to H_2S and HCN is hydrogenated to ammonia. The shift gas is cooled and is then desulfurized in the Selexol wash. Also in the Selexol wash, the bulk of the CO_2 is removed so that the raw hydrogen entering the PSA unit already has a hydrogen content of 97 mol%. Final purification of the hydrogen takes place in the PSA unit.

7.1.4 Carbon monoxide and oxo-alcohols

Carbon monoxide market

Pure carbon monoxide is a raw material for a number of organic chemicals, such as acetic acid, phosgene (which is an intermediate for polyurethane manufacture) and formic acid (see Figure 7.6). The toxic nature of CO makes it difficult to store or transport. For safety reasons, inventories are usually kept to a minimum, and thus pure carbon monoxide plants tend to be located close to the point of use of the product and are accordingly fairly small. Approximately 500 kt/y of CO is used for producing acetic acid.

Oxo-alcohols market

The term oxo-alcohols covers a range of higher alcohols from C_3-alcohol to $C_{18}+$. Lower alcohols (propanol, butanol and pentanol) find usage as solvents. In the range C_8 to C_{10} they are used as plasticizers. Higher alcohols ($C_{12}+$) are required for the manufacture of synthetic detergents. Oxo-alcohols are manufactured by reacting olefins with syngas (50:50 H_2:CO) to form aldehydes. The aldehyde is then hydrogenated with high purity hydrogen to produce the oxo-alcohol end product. World production of oxo alcohols in 2002 was about 8100 kt/y, over half of which was produced in two countries alone, the United States and Germany.

CO and oxo-syngas specifications

Typical specifications for carbon monoxide and oxo-synthesis gas are:

	CO	**Oxo-syngas**
H_2/CO	–	~1
CO_2	–	<0.5 mol%
H_2	<0.1 mol%	~49 mol%
CO	>98.5 mol%	~49 mol%

Exact numbers depend on use and process.

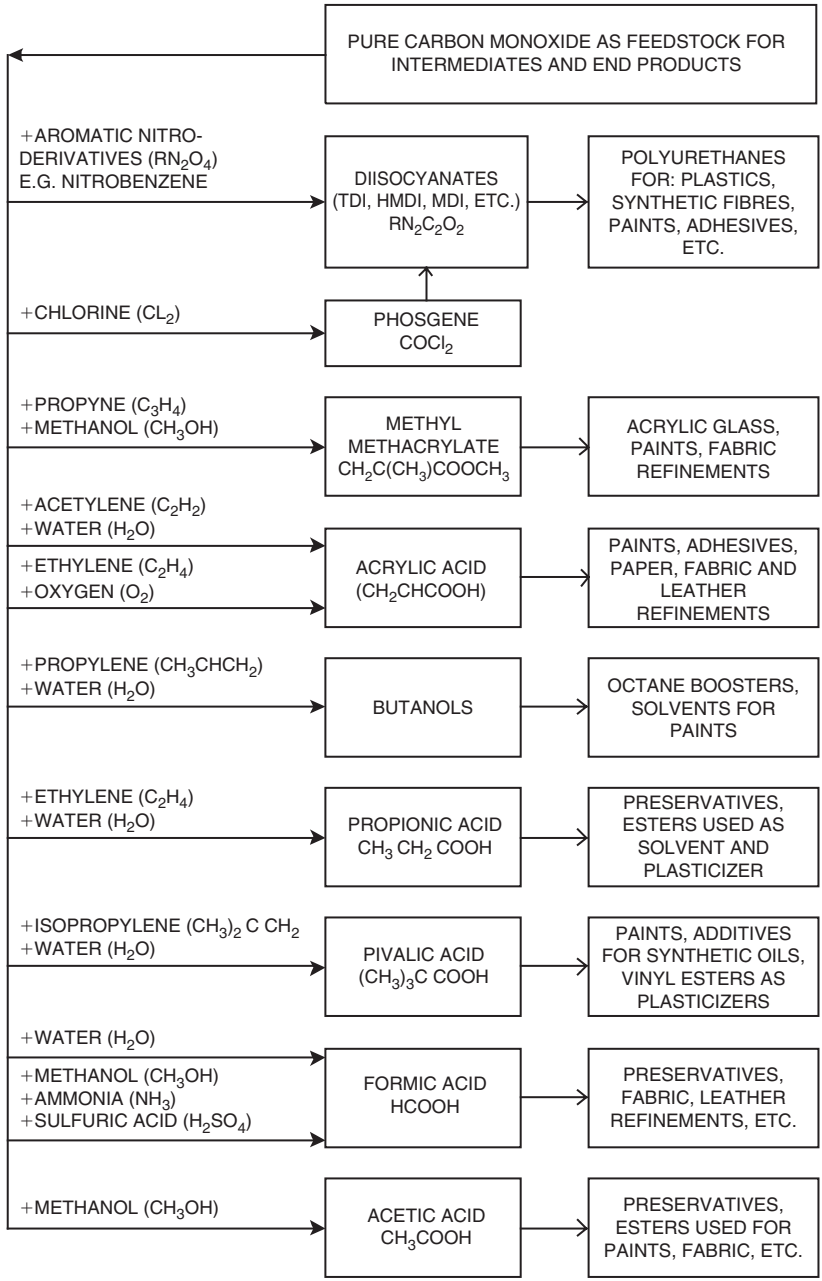

Figure 7.6 Major applications of high purity carbon monoxide (Lath and Herbert, 1986).

Design considerations

The example will show combined production of 5000 Nm³/h pure carbon monoxide and 5000 Nm³/h oxo-synthesis gas, based on natural gas feed. For a plant of this size, it is assumed that oxygen is available from a pipeline or a multi-customer gas supply facility.

- There are three principle processes for the manufacture of synthesis gas from natural gas: steam reforming, catalytic autothermal reforming and partial oxidation. The H_2/CO ratio of the syngas is an important characteristic distinguishing between these three processes. Unless there is the possibility of importing CO_2, the typical range for the three processes with and without CO_2 recycle is:

Process	**H_2/CO ratio**	
	With CO_2 recycle	**Without CO_2 recycle**
Steam reforming	2.9	6.5
Catalytic autothermal reforming	1.7	3.7
Partial oxidation	1.55	1.81

Thus the desired ratio of hydrogen and carbon monoxide in the product streams is an important factor in process selection. Note, however, that with partial oxidation the CO_2 produced is small and so also is the effect of CO_2 recycle. For this reason, CO_2 recycle is seldom applied with partial oxidation units.

The other determining issue is primarily economic, namely the availability of oxygen for both autothermal reforming and partial oxidation. For small plants it is seldom economic to build a dedicated air separation plant, so where no pipeline oxygen is available or synergies with a gas supplier cannot be realized, steam reforming would be applied, despite the potential hydrogen surplus, which can only be used as fuel.

For both oxo-synthesis and pure CO production, all processes supply excess hydrogen, so partial oxidation, which produces the lowest H_2/CO ratio, is often selected if oxygen is available.

- Looking at the flowsheet in Figure 7.7, it can be seen that no desulfurization step has been expressly included. The decision regarding what to do about desulfurization will depend heavily on the amount of sulfur in the gas. One frequently applied possibility is to include a zinc-oxide bed in the natural gas preheat train. However, it is important to pay careful attention to the matter of metal dusting corrosion, particularly at the hot gas inlet of a syngas cooler. The alternative is to place the zinc-oxide bed in the syngas line, upstream of the amine wash, allowing the sulfur to act as a corrosion inhibitor (see section 6.11). An additional advantage of this choice is that sulfur also inhibits the methanation reaction. Spontaneous methanation at the temperatures prevailing is a rare occurrence, but in the presence of catalytic

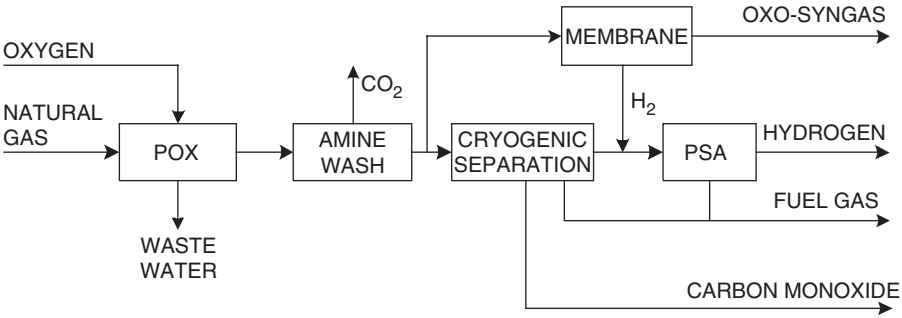

Figure 7.7 CO and oxo-syngas plant.

impurities in the gas it can take place. A third possibility, if the sulfur level in the natural gas is sufficiently low, is to remove it with the CO_2 in the amine wash. The latter must, however, be designed to remove COS as well as H_2S, so as to meet the oxo-gas specification, and the sulfur content in the CO_2 must be within environmentally permitted levels. For the purposes of our example this matter is not included in the mass balance, Table 7.5.

Example

Natural gas is fed to the partial oxidation reactor, where it is reacted with oxygen and without any steam moderator, to produce a raw synthesis gas. The raw gas is desulfurized with zinc oxide at the outlet of the partial oxidation unit after cooling in a syngas cooler. The raw gas is washed with MDEA to achieve a residual CO_2 content of 10 ppmv, which meets the oxo-syngas specification and the requirements of the cold box for the cryogenic separation. In the membrane unit, sufficient hydrogen is extracted from the clean gas as permeate to leave the H_2/CO ratio of the non-permeate at 1:1 as required by the oxo-synthesis process.

In the cold box of the cryogenic separation, a 98.5 mol% CO product is obtained, which must be compressed to feed the downstream CO-consuming units. Both membrane and cryogenic separation produce a raw hydrogen, which is purified in a PSA unit so that it can be used in the hydrogenation stage of the oxo process or for other purposes. Tail gases from the cryogenic unit and the PSA are available for use as a low-pressure fuel gas.

7.2 SYNFUELS

For transportation and upgrading reasons, there is often a need for converting one fuel into another fuel. On the one hand this may concern the conversion of coal or remote natural gas into a liquid fuel, and on the other hand the conversion of coal into substitute or synthetic natural gas (SNG).

Table 7.5
Mass balance for CO and oxo-syngas plant

		Natural gas	Oxygen	Raw gas	Clean gas	CO_2	Membrane feed	Oxo-syngas	Permeate	Cold box feed	CO	PSA feed	Hydrogen	Fuel gas
CO_2	mol%	1.2		3.22	0.00	97.14	0.00	0.00	0.00	0.00				
CO	mol%			37.10	38.33	1.12	38.33	48.56	11.40	38.33	98.51	9.02	99.99	33.65
H_2	mol%			57.65	59.58	1.74	59.58	48.56	88.57	59.58		90.97		60.25
CH_4	mol%	87.7		0.30	0.31		0.31	0.43		0.31				1.16
C_2H_6	mol%	5.1												
C_3H_8	mol%	1.0												
C_4H_{10}	mol%	0.4												
C_5+	mol%	0.3												
N_2	mol%	4.3	0.1	1.55	1.60		1.60	2.20	0.03	1.60	1.49	0.01	0.01	4.26
Ar	mol%		0.4	0.18	0.18		0.18	0.25	0.00	0.18				0.68
O_2	mol%		99.5											
H_2O	mol%													
Dry gas	kmol/h	397	274	1071	1035	35	308	223	85	727	226	478	380	194
Pressure	bar	36	33	28	27	1.3	27	26	17	27	25	17	16	1.3
Temp.	°C	25	120	35	35	45	35	35	35	25	35	35	35	35

Virtually all modern coal gasification processes have been originally developed for the production of synthesis gas for the subsequent production of chemical feedstocks or hydrocarbon liquids via Fischer-Tropsch synthesis. The only place in the world where the process sequence coal gasification to Fischer-Tropsch liquids (CTL) is currently practiced is at the Sasol complex in South Africa, although a number of projects are currently under consideration in other parts of the world, such as the USA, China and Australia. For the production of SNG from coal, only one plant is in operation, in Beulah, North Dakota. For the conversion of remote natural gas via partial oxidation and Fischer-Tropsch synthesis into hydrocarbon liquids (GTL), one plant is currently in operation in Bintulu in Malaysia and another under construction in Qatar. Other GTL plants in Qatar, Trinidad and South Africa use autothermal reforming, steam reforming, or a combination of both.

The GTL option is especially attractive when low-cost natural or associated gas is available that cannot be economically transported to markets either by pipeline or as liquefied natural gas (LNG). In principle, there are two liquid products that can be produced: methanol and Fischer-Tropsch (FT) liquids. For the production of methanol, the reader is referred to section 7.1.2.

Classically, two different FT synthesis process types are available: the ARGE and the Synthol synthesis. In the ARGE process, synthesis gas is converted into straight-chain olefins and paraffins over a cobalt-containing catalyst at temperatures of about 200°C and pressures of 30–40 bar. The reaction takes place in a large number of parallel fixed-bed reactors that are placed in a pressure vessel containing boiling water for cooling and ensuring an essentially isothermal process.

The product is subsequently hydrogenated in case straight paraffins are the desired product. Such products are eminently suitable for the production of solvents and waxes, as the product is completely free from sulfur and nitrogen compounds, as well as from aromatics. By adding an acidic function to the hydrogenation catalyst, some iso-paraffins are also produced that improve the low-temperature characteristics of the premium fuels that can be produced by the ARGE process. Moreover the boiling range of the products can be controlled within a wide range as the acidic function can be used for hydrocracking the heavier fractions.

Due to the absence of aromatics, the kerosene fraction has a very high smoke point and is an excellent blending component for aviation turbine fuels. For the same reason, the gasoil fraction has a very high cetane number (>70) and is a valuable blending component for automotive diesel fuels.

In the Synthol process, synthesis gas is converted into an aromatic-rich product over an iron-containing catalyst at temperatures of about 250°C and pressures of 30–40 bar. The reaction takes place in large fluid-bed reactors. The product is rich in aromatics, and is used for the production of motor gasoline and as a diesel blending component. This process is being used at the Sasol plant in Secunda and in Mossel Bay, both in South Africa.

In recent years, further developments have been made. The Shell SMDS process uses a fixed-bed reactor similar to that of ARGE. Sasol has developed its advanced slurry-bed reactor. Such three phase reactors (the solid catalyst, the liquid product and the syngas) have the advantage of a very good temperature control. They have

also been considered for methanol synthesis. Exxon, BP and Statoil have demonstration plants in operation. The effects of various synthesis characteristics on the gas production facility are discussed below.

7.2.1 Gas to liquids

There are considerable attractions to producing liquid hydrocarbon fuels from remote sources of natural gas. On the one hand, it provides a means of bringing energy resources from remote locations to the market in a form that is not limited by the small number of receiving terminals, as is the case for LNG, but that allows the utilization of the existing large and flexible infrastructure already in place for the transport of liquid hydrocarbons.

On the other hand, the quality of Fischer-Tropsch products enables them to be sold at a premium price. All F-T products are sulfur-free (typically <1 ppm), but in particular the high-quality diesel cut with no aromatic content and a cetane index of over 70 can contribute significantly to achieving the US Environmental Protection Agency (EPA) standards valid from 2006 (Mulder, 1998; Agee, 2002). The low density of F-T diesel is another reason why it tends to be used as a blending stock.

The basic Fischer-Tropsch process produces a mixture of straight-chain hydrocarbons from hydrogen and carbon monoxide according to the reaction:

$$CO + 2H_2 = -[CH_2]- + H_2O \qquad -159 \text{ MJ/kmol} \tag{7.5}$$

where $-[CH_2]-$ is the basic building block of the hydrocarbon molecules. The product mixture depends on the catalyst, the process conditions (pressure and temperature), and the synthesis gas composition. The product slate follows the Schulz-Flory distributions. The selectivity of two typical processes is shown in Table 7.6; see also Table 7.7.

Table 7.6
Selectivity (carbon basis) of Fischer-Tropsch processes at Sasol

Product	ARGE	Synthol
CH_4	4	7
C_2 to C_4 olefins	4	24
C_2 to C_4 paraffins	4	6
Gasoline	18	36
Middle distillate	19	12
Heavy oils and waxes	48	9
Water-soluble oxygenates	3	6

Source: Mulder, 1998.

Table 7.7
Operating characteristics of ARGE and Synthol

	ARGE	Synthol
Temperature (°C)	220–225	320–340
Pressure (bar)	25 bar	23
H_2 : CO ratio	1.7	2.54

Source: Derbyshire and Gray, 1986.

Different FT syntheses require different H_2/CO ratios in the syngas. Furthermore, additional hydrogen is often required for product work-up. These differences demand an individual approach to syngas generation for each project, depending on the synthesis process selected, the desired product slate, and the product work-up scheme as indicated in Table 7.8 (Higman 1990).

Proven and operating syngas production routes from natural gas include partial oxidation, combined reforming, (steam reformer followed by an oxygen-blown secondary reformer as used for methanol production), and autothermal reforming. The first two routes are described in Higman (1990). Autothermal reforming is now used at the original Sasol plant in Sasolburg since the construction of a natural gas pipeline to the facility, and also for the Oryx plant in Qatar. In conformity with the scope of this book, however, our example is partial oxidation-based.

A typical specification for Fischer-Tropsch syngas is shown in Table 7.9. From this we can see that the gas must be sulfur-free, since sulfur is a catalyst poison. Whereas with catalytic reforming processes the desulfurization must be performed upstream of gas generation to protect the reforming catalyst, with partial oxidation there is also the option of desulfurizing in the syngas. In fact, syngas desulfurization has

Table 7.8
Synthesis gas specifications

Synthesis processes	H_2/CO	Remarks
ARGE	1.3–2.3	
SMDS	1.5–2	
Synthol	2.6	
Methanol	2.4–3	$(H_2 - CO_2)/(CO + CO_2) = 2.05$

Sources: Higman, 1990; van der Burgt and Sie, 1984.

Table 7.9
Specification for Fischer-Tropsch synthesis gas

Gas component	Max. allowable concentration
$H_2S + COS + CS_2$	<1 ppmv
$NH_3 + HCN$	<1 ppmv
HCl + HBr + HF	<10 ppbv
Alkaline metals	<10 ppbv
Solids (soot, dust, ash)	Essentially nil
Tars including BTX	Below dewpoint
Phenols and similar	<1 ppmv

Source: Boererigter *et al*., 2002

a number of advantages over natural gas desulfurization. First, organic sulfur species in the natural gas are converted to H_2S (and traces of COS) in the partial oxidation reactor, thus obviating the need for an upstream hydrogenation stage complete with hydrogen recycle. Secondly, the syngas from a typical partial oxidation unit has a very high CO partial pressure and high Boudouard equilibrium temperature (about 1050°C), which makes it an extremely aggressive metal dusting agent. Syngas desulfurization leaves the sulfur in the syngas while it is in the dangerous temperature range. The sulfur is therefore able to act as an effective corrosion inhibitor. Thirdly, sulfur-free synthesis gas can be subject to spontaneous methanation at temperatures above about 400°C, given the right conditions. Against these benefits is the fact that the volume of the synthesis gas to be treated is about three times that of the natural gas feed. The level of desulfurization is therefore less, and equipment will tend to be larger. Nonetheless, in applications with waste heat recovery, which would be typical for a Fischer-Tropsch environment, the authors would recommend syngas desulfurization.

The Fischer-Tropsch synthesis produces methane and other light fractions that, depending on the tail gas recovery arrangement, may contain olefins. Some of this stream may be recycled to the partial oxidation unit for reprocessing to synthesis gas; 100% recycle is, however, not possible, since the inerts (argon and nitrogen) will build up excessively in the recycle loop. In a steam reformer-based system, it is possible to create an inerts purge by using F-T tail gas as reformer fuel. In the partial oxidation scenario, hydrogen production provides the opportunity for a purge, as shown in Figure 7.8. Care should be taken, however, with F-T tail gas as reformer feed. The olefin content will tend to coke on the reformer catalyst. CO in the tail gas may methanate on the catalyst for olefin hydrogenation. Nonetheless, with suitable pre-treatment, tail gas can be used as reformer feed.

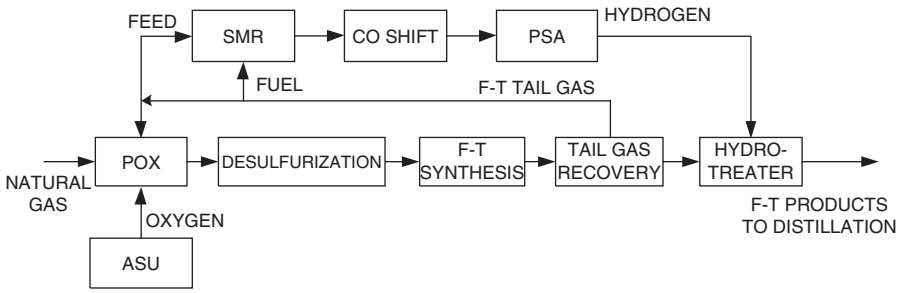

Figure 7.8 Block flow diagram of liquids production using partial oxidation and F-T synthesis.

The overall flowsheet can be seen in Figure 7.8. Natural gas is fed directly to the partial oxidation unit un-desulfurized. (In this context, it is assumed that any bulk sulfur removal, LPG recovery or the like has been conducted at the wellhead. Clearly this has to be taken into account in the economics of a project for handling remote gas, for which no wellhead treatment would otherwise be available.) Desulfurization takes place on a zinc-oxide/copper-oxide adsorber bed in the syngas stream before the latter is fed to the synthesis unit. In the tail gas recovery unit, light gaseous products are recovered and partially recycled. The rest is used for hydrogen manufacture. Heavy oils and waxes are then hydrotreated as part of the product work-up.

7.2.2 Coal to liquids

Apart from the highly specific case of the South African Sasol plants, using coal as a feedstock for Fischer-Tropsch liquids has generally not proved to be economically attractive. The recent rise in the price of oil has, however, generated considerable interest in this possibility again. The basic line-up for the gas treating would in principle be similar to that for methanol or SNG, but with minor alterations in the amount of CO shift required to achieve an optimum stoichiometric ratio. Clearly, with a coal feedstock more attention must be paid to removal of trace catalyst poisons, particularly for cobalt catalysts, than is the case for gas to liquids.

It is worthwhile noting that there is a place for gasification, even where the coal to liquids is based on direct hydrogenation rather than on Fischer-Tropsch technology. Such a plant is currently under construction in China and due to come on stream in 2009. The large hydrogen requirement for the plant is manufactured using coal gasification.

7.2.3 SNG from coal

The energy crisis of the 1970s and the accompanying concerns regarding a shortage of natural gas gave rise not only to intensive research into hydrogenating gasification systems, but also to a large number of projects for the manufacture of synthetic natural gas (SNG). Of these only one was ever built, in Beulah, North Dakota. The plant still operates today, and in 2000 broke new ground by making the CO_2 from the acid gas removal unit available for enhanced oil recovery (Dittus and Johnson, 2001). For many years, the availability of cheap natural gas made it unlikely that another SNG facility would be built in the near or even medium term. However, more recent developments in the North American natural gas market have changed this picture. It is therefore instructive to look at a number of issues connected with its manufacture from coal.

SNG consists primarily of methane, which is synthesized by the reaction of carbon oxides with hydrogen over a nickel catalyst according to the equations:

$$CO + 3H_2 = CH_4 + H_2O \qquad -206 \text{ MJ/kmol} \tag{7.6}$$

$$CO_2 + 4H_2 = CH_4 + 2H_2O \qquad -165 \text{ MJ/kmol} \tag{7.7}$$

Specifications for SNG require a maximum hydrogen content of 10% and, depending on the heating value requirement, a limitation on CO_2. Typically, this results in a requirement on the stoichiometry of the synthesis gas such that the stoichiometric number ($SN = H_2/(3CO + 4CO_2)$) has a value between 0.98 and 1.03 (Müller, 1989).

The selection of the coal gasifier cannot be made in isolation from the quality of the coal itself (see Chapters 4 and 5). Looked at from the point of view of the application alone, there is a distinct advantage to processes that produce a high methane content ex gasifier, since this reduces the volumes of gas to be treated and, if necessary, compressed between gasification and synthesis. For this reason, a Lurgi dry-ash gasifier has been selected (see Figure 7.9).

With the selection of a Lurgi dry-ash gasifier, a decision has to be taken on the matter of tar handling. The tar can be used as a raw material for the manufacture of tars and phenols. Alternatively, it could also be gasified to generate additional synthesis gas, thus reducing the coal throughput requirement. The former solution has been chosen in the example. Phenosolvan and CLL units have been incorporated to recover ammonia from the waste water.

The raw gas contains more CO than that required by the methane synthesis, so a partial stream is shifted on a raw gas shift catalyst. In the downstream acid gas removal, the residual hydrocarbons, sulfur and nitrogen compounds (NH_3 and HCN) must be removed. To achieve the correct stoichiometry, a partial CO_2 removal is also required. The sulfur specification for the nickel catalyst is a maximum 100 ppb or even lower. (In the Beulah plant, 20 ppmv is achieved; US Department of Energy, 2006.) The only system capable of all these tasks is Rectisol, and this is also

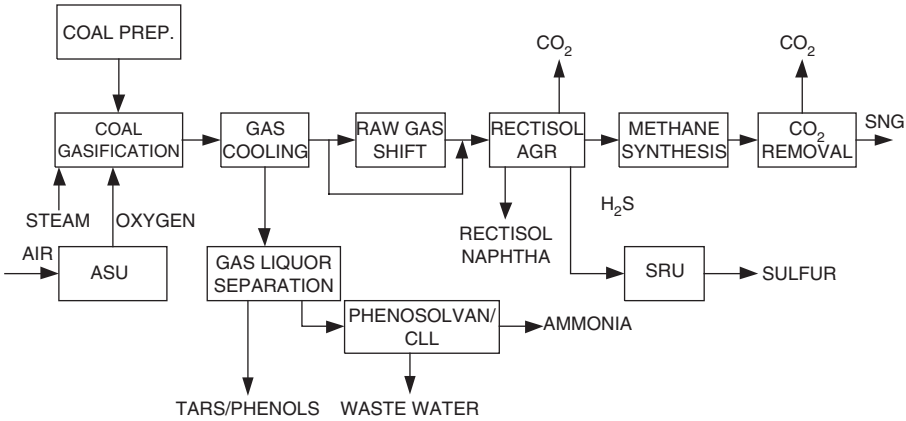

Figure 7.9 Block flow diagram for SNG manufacture from coal.

included in the example flowsheet. In order to achieve the low CO_2 specification of the SNG, CO_2 may be removed in a final Rectisol stage, which also provides the necessary drying function.

7.3 POWER

Much of the world's 3.1 million installed MW power generation capacity is over 30 years old, particularly in the industrialized countries. Typically, the average efficiency of coal-fired power stations is 30–35%. For gas-fired power stations, the efficiency varies from 35 to 43% for open cycles and 50 to 60% for combined cycles. Although the efficiency of coal-fired units with modern combustion technology is above 40%, this state of affairs has (rightly) caused considerable concern, in terms of both conservation of resources and CO_2 emissions (van der Burgt *et al.*, 1992). Over the past 20 years a vast amount of work has gone into improving existing combustion technologies, as well as investigating alternatives. Of the potential alternatives, the use of gasification to produce a suitable fuel for highly efficient gas turbines, the IGCC, has continually proved to be a leading contender.

The power industry is, worldwide, the largest man-made emitter of CO_2, at 33% of the total. (The transport sector is the next largest, at 25%.) The increasing use of natural gas as a feedstock for gas turbines (the "dash-to-gas") has allowed the power sector to reduce emissions on new capacity substantially, even though much of the motivation lies in the reduced investment and shorter construction times associated with gas turbine technology. However, the medium-term picture has to take account of the limits in natural gas supply. By 2030 Europe will be reliant on gas imports for some 70% of its supply (European Commission, 2001), so alternatives to this simple solution are required.

Typical efficiencies of the current generation of steam cycle power plant, including flue gas desulfurization and NO_x abatement, are 40–42%. Ultra supercritical cycles in operation have 43%, and IGCCs 38–43%. Serious assessments project between 46% and 50% as being possible with these technologies in the next 10 years. Looking at these figures, it should be borne in mind that a four-point increase in efficiency represents about 10% less CO_2 production per unit of power produced.

Already there is a capacity of some 3800 MW in installed IGCC plus 3500 MW in projects currently under development or construction. Much of this is built in association with oil refineries, where synergies in the residue or petroleum coke disposal, as well as in hydrogen production, have encouraged their development. Coal-based projects are following.

7.3.1 Comparison with combustion

The maximum theoretical efficiency of a machine for the conversion of chemical combustion energy into power is given by the formula for a reversible Carnot process:

$$\eta = \frac{w}{q} = 1 - \frac{T_L}{T_H}$$

in which η is the fraction of the power w produced by the cycle over the heat of combustion q added to the cycle. T_L and T_H are the lowest and the highest absolute temperatures of the cycle. The lowest temperature is almost always the ambient (or cooling water) temperature, and hence the formula immediately shows how important the maximum temperature is for the cycle efficiency. A graphical representation of the above formula is given in Figure 7.10.

Note that the Carnot efficiencies for cryogenic cycles, as given in Figure 7.10, have been calculated for a T_H of 27°C and a T_L of −100°C and −200°C. These data are solely given here because they illustrate how energy-intensive cryogenic cycles, as applied in ASU's, are. The negative efficiency of −80% of a cryogenic cycle in an ASU that has a minimum temperature of about −200°C is in absolute terms about equal to a cycle with a maximum temperature of 1200°C. A negative efficiency for cryogenic cycles is caused by the fact that the energy for such cycles constitutes a loss.

The Carnot efficiencies for various cycles are given in Table 7.10, together with some real values.

As can be seen, the potential for any particular cycle as represented by its Carnot efficiency is by no means the only consideration when looking at the merits and limitations of different cycles. The efficiencies offered by gas turbines, which operate with an upper temperature of between 1200°C and 1400°C (compared with 500–650°C for steam turbines), are restricted by the fact that the gas turbine itself

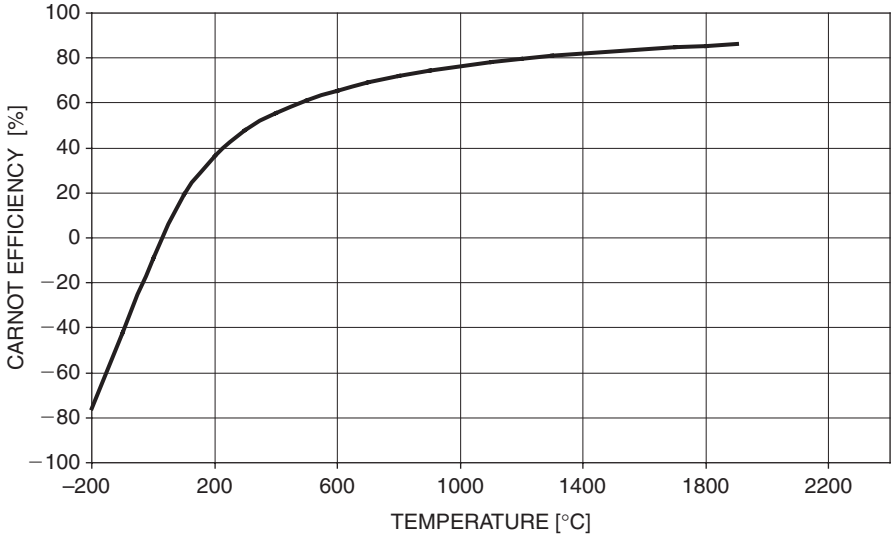

Figure 7.10 Carnot efficiency as a function of temperature.

Table 7.10
Theoretical and practical efficiencies of various power plant cycles

Cycle	Fuel	Temperatures (°C)		Efficiencies (% LHV)		
		T_{Low}	T_{High}	Carnot	Actual	Actual as % carnot
Conventional steam power plant	Coal	27	540	63	40	63
Ditto ultra supercritical	Coal	27	650	67	45	67
IGCC	Coal	27	1350	82	46	56
Open gas turbine cycle	Gas	27	1210	80	43	54
Combined cycle	Gas	27	1350	82	58	71
Tophat cycle	Gas	27	1350	82	60	73
Low speed marine diesel	Heavy fuel oil	27	2000	87	48	55
Low speed marine diesel with supercharger	Heavy fuel oil	27	2000	87	53	61

requires a clean gaseous or liquid fuel, whereas the conventional combustion processes can handle dirty fuels, including solids. The diesel engine cycles benefit from the high temperatures (2000°C), but precisely this property contributes to the extremely high NO_x emissions connected with this technology.

In summary, the conclusion can be drawn that in the actual processes only 54–73% of the Carnot efficiency is realized. The best results can be obtained in a so-called Tophat cycle, which is a single cycle based on a gas turbine (discussed in section 7.3.4). Before dealing with the pros and cons of various more complex cycles, the basic principles of the steam and gas turbine cycles will be discussed.

Steam cycles

The simplest cycle for the conversion of heat, which may be derived from full or partial combustion or other sources such as nuclear energy, is the open steam cycle, which is depicted as a flow scheme and T-s diagram in Figures 7.11 and 7.12 respectively. The corresponding points in the cycle are labeled A–F in both figures. The top of the curve in the T-s diagram is the critical point. Points on the curve to the right of the critical point represent saturated steam, points to the left represent water.

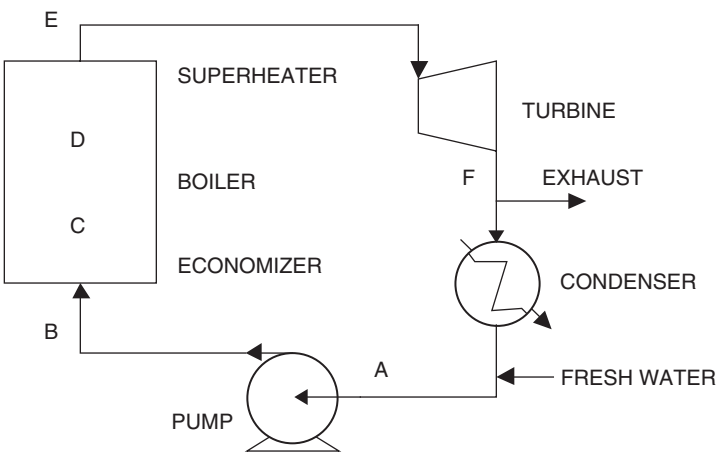

Figure 7.11 Simple steam cycle.

In the open cycle, corresponding to an atmospheric back-pressure turbine, the pump raises the pressure of the water from atmospheric pressure at the point A to the working pressure of the boiler at point B. The water is then heated to boiling temperature (C) and evaporated at constant temperature (D). Superheating is represented in the T-s diagram by the line D–E. Expansion to exhaust at atmospheric pressure (the vertical line E–F) takes place in a steam engine such as a turbine.

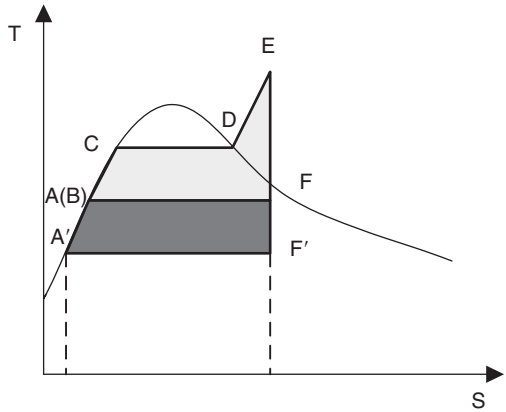

Figure 7.12 T-s diagram: simple steam cycle.

The work extracted from the process is represented by the upper shaded area of the T-s diagram. The heat input is represented by the shaded area plus that of the rectangular area below the line A–F.

In the closed cycle with a condenser, known as the Rankine cycle, the expansion continues to the point F′ at a sub-atmospheric pressure and the steam is condensed, returning it to the state A′. As can be seen from the T-s diagram, the work extracted is increased by the area of the lower shaded area.

In the twentieth century, many improvements have been made to the Rankine cycle. As regards equipment, the most important improvement has been the use of steam turbines instead of piston expansion machines. Another feature that has increased the efficiency is the use of low-level heat from the turbine for preheating the boiler feed water, thus using less high-level heat in the boiler. High-level heat should preferably be used only where topping-heat is required. Doing this is making good use of the exergy present in the fuel. For a good understanding of exergy, the reader is referred to treatises on thermodynamics (Shvets *et al.*, 1975). A knowledge of exergy is of utmost importance for energy-efficient designs (Dolinskovo and Brodianski, 1991). For the purpose of understanding the cycles discussed in this book, it is sufficient to know that high-level heat should preferably not be used for low-level heat requirements and, furthermore, that the pressure energy in media should not be throttled away unnecessarily. This last point is especially important for gases.

Apart from adding a condenser and boiler feed water preheat, there are three other major improvements to the steam cycle. These are the application of higher steam pressures, higher superheat temperatures and reheat cycles. For details, the reader is referred to the literature (Shvets *et al.*, 1975).

Examples of modern supercritical units are the pulverized coal (PC) coal-fired double-reheat unit at Aalborg in Denmark (285 bar/580°C/580°C/580°C) and the single-reheat unit at Matsuura in Japan (241 bar/593°C/593°C). In Germany and Japan,

units are now under design or construction for single reheat plants of 260 bar/580°C/600°C and 250 bar/600°C/610°C respectively. The next aim is plants at steam conditions of 300 bar/600°C/620°C. The new steels that are required are a major issue for all these developments (Viswanathan *et al*., 2002). A project for component-testing work for 700°C steam conditions has been initiated in Germany using high nickel materials (Comtes700, 2007).

As a result of all these improvements, it has been possible to increase the efficiency of steam cycles to 45% LHV basis – that is, 67% of the maximum Carnot efficiency, as shown in Table 7.10.

This result is obtained with water as a working fluid, which is in some ways the worst choice for a Rankine cycle because of the very high heat of evaporation and the high specific heat of liquid water. Yantovski (1996) has extensively studied the merits of using cycles in which CO_2 is used as the main working fluid, which has the benefit of a low heat of evaporation. Such a cycle has advantages when CO_2 has to be captured and sequestered. A major disadvantage of CO_2 is that it is more difficult to handle, as the vapor pressure of liquid CO_2 is already 40–50 bar at ambient temperatures.

The reason for discussing the steam cycle in some detail is twofold. On the one hand, the steam cycle plays an important role in combined cycles (CC); on the other hand, much can be learned from its development that is also of importance for the Brayton cycle, as used in gas turbines.

Gas cycles and combined cycles

The most widespread gas turbine cycle in use is the aircraft engine, which operates an open cycle using essentially air as a working fluid. In other applications, the open cycle is mainly used for peak-shaving installations. The flow scheme and the T-s diagram of the Brayton cycle are given in Figures 7.13 and 7.14 respectively. Air (A) is compressed in a compressor, and the pressurized air (B) is used for the combustion of the fuel. The resulting very hot gases (C) then enter the turbine, and the still hot gases (D) are sent to the stack. Although this simple cycle has at best about the same efficiency (43%) as a fairly advanced steam cycle, the efficiency as a percentage of the Carnot potential is about 10% lower (see Table 7.10). This problem can be remedied by using the hot gases leaving the gas turbine as a heat source for a steam cycle in a heat recovery steam generator (HRSG). In this case the efficiency increases to almost 60%, which corresponds to over 70% of the Carnot potential.

The flow scheme and the T-s diagram for this combined cycle are given in Figures 7.15 and 7.16 respectively. In the T-s diagram, it is clearly shown that part of the space below the area of the Brayton cycle is occupied by a relatively small steam cycle. The ratio of the shaded areas to the area below the upper line of the cycle, which is a measure of the overall efficiency, is thus considerably increased.

The open cycle is used in airplanes and for peak shaving in power stations. Larger and more efficient gas turbines are now entering the marketplace, with firing

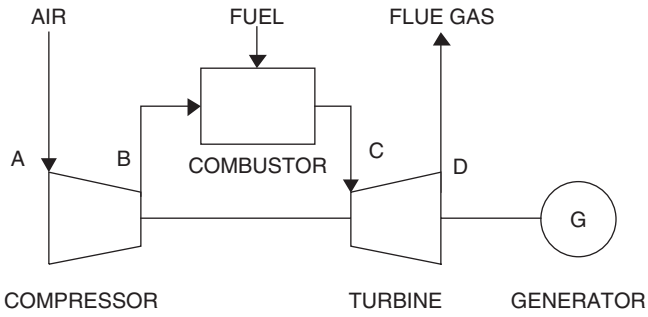

Figure 7.13 Gas turbine with open cycle.

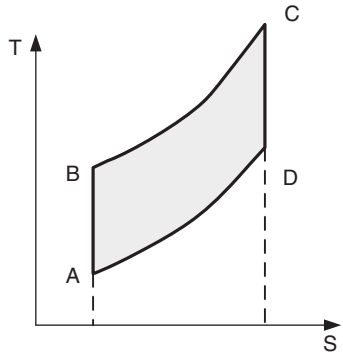

Figure 7.14 T-s diagram for open-cycle gas turbine.

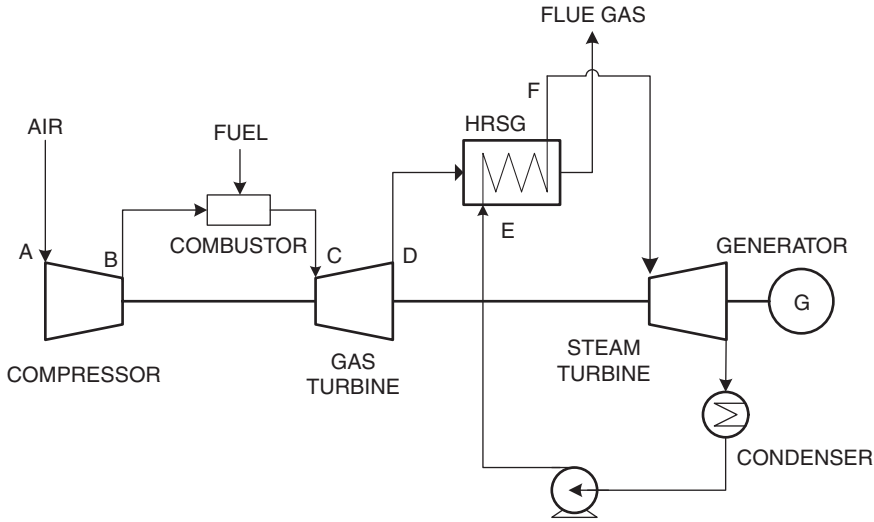

Figure 7.15 Gas turbine with combined cycle.

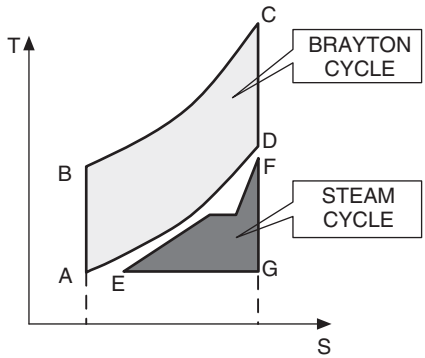

Figure 7.16 T-s diagram for combined cycle.

temperatures of about 1500°C. These advanced turbines offer additional economies of scale, reduced capital costs and higher overall net efficiencies of 45–50% (LHV basis). This illustrates how gas turbine manufacturers have concentrated on higher turbine inlet temperatures in the search for higher efficiencies. However, the efficiency gain achievable by this means has its limits. Taking the Carnot criterion (Figure 7.10) illustrates that increasing the inlet temperature from 1200°C to 1500°C will increase the efficiency from 80% to 83%. Assuming a high of 60% can be realized in actual practice, this implies that the cycle efficiency will increase by a mere 2%. Further, it should be remembered that blade cooling and low NO_x requirements, which are problems that increase with temperature, will imply a higher parasitic power consumption, all of which casts some doubt on too great expectations of even higher gas turbine inlet temperatures.

In base load power stations, combined cycles (CC) are generally used. Although the pure Brayton cycle is not very efficient in comparison, it has the advantage of a very low capital cost. From the point of view of the Brayton cycle, it is advantageous to achieve as low a gas outlet temperature as possible. Typically, the gas outlet temperatures of the gas turbine are about 550°C. This is, however a disadvantage for the steam part of the combined cycle, since high superheat temperatures cannot be achieved. The steam cycle is therefore relatively capital intensive (expressed in dollars per installed kW). The main disadvantage of the use of gas turbines is that only gas and light petroleum distillates can be used as a fuel. To take full advantage of the high efficiency of the CC in combination with dirty feedstocks, such as coal and heavy oils, these fuels must first be gasified.

7.3.2 State-of-the-art IGCC

Flow schemes

The Integrated Gasification Combined Cycle (IGCC) is in its present form basically a combination of gasification and a combined cycle plant. The advantage of

incorporating gasification into these plants is to convert solid and residual liquid fuels into a form that gas turbines can accept. Furthermore, gasification provides a means of desulfurizing the fuel before combusting it in the combined cycle plant to levels not achievable at reasonable cost with current FGD technologies. Thus, with a gasifier and the proper gas treating train behind it, it is possible to obtain a fuel that can be combusted as simply and in as environmentally-friendly fashion as natural gas. IGCC plants with coal as feedstock will generally be built in power stations, whereas IGCC plants with heavy residual fractions as feedstock are more likely to be found in oil refineries.

Although the two component parts of an IGCC (gasification and gas turbines) are both well-developed technologies, the combination is nonetheless relatively new. As is typical for a technology in such a stage of development, there is considerable variation in the optimization of flow sheets for IGCC. This is particularly true in the matter of effective integration of the two core technologies involved (Holt, 2001). One of the most important developments during the last few years is the clear trend towards development of so-called reference plant or template designs. For the present this is limited to 630 MW_e nominal rating power plants in the 60 Hz market, for which a number of alliances between gasification technology suppliers, EPC contractors and gas turbine suppliers have been set up (Amick, 2004; Rigdon and Avidon, 2005). The purpose of this development is to reduce costs with a semi-standardized product that will also allow shorter bidding and execution schedules. It is typically based on two gasifier trains and a 2-on-1 (two gas turbines with one steam turbine) combined cycle. The word "semi-standardized" is used because, like any other plant of this nature, structural design may have to consider different seismic zones, cooling design adapted to local conditions and so on. However, by maintaining a standardized core, advantages in procurement, operational availability, spare parts warehousing and others can be achieved through replication – not a common feature of the gasification industry to date.

Despite the push (in principle) from both supplier and client sides of the industry for more standardization, there are still a number of issues for which consensus is still required – and at least some of this will continue until unified permitting standards are achieved.

Plant integration

Steam integration. The most important integration strategy applied in almost all IGCC plants is the integration of the steam system. The steam cycle of a standard CC has an efficiency of about 38%. The pinch problem caused by the evaporation of the water is the main reason why it is so low. On the other hand, a steam system that derives its heat only from a syngas cooler of a gasifier has also a low efficiency of maybe 38%, because superheating is difficult in a syngas cooler. Combining both steam sources alleviates the restrictions, since the pinch in the HRSG is eased by the large evaporating duty in the syngas cooler, and more saturated steam can be

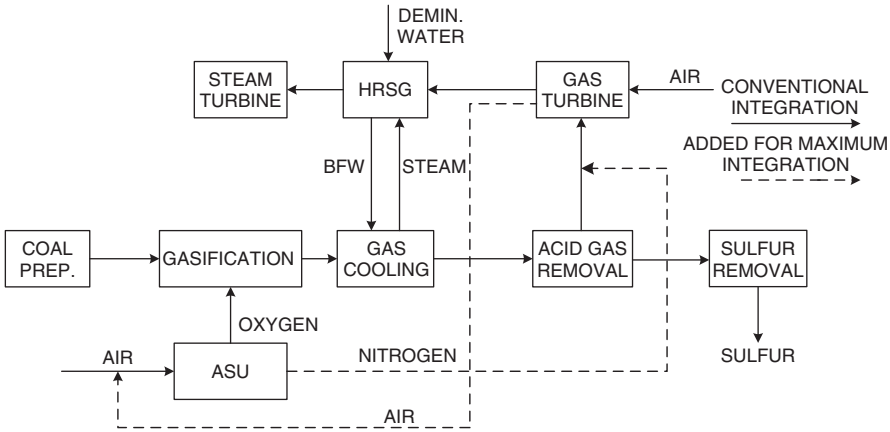

Figure 7.17 Block flow diagram of an integrated IGCC power plant.

superheated in the HRSG, albeit at a lower superheat temperature. It is therefore not surprising that when combining the heat sources from the HRSG and syngas cooler the efficiency becomes about 40%. This is represented by the "conventional integration" case, shown in Figure 7.17.

Air and nitrogen integration. Two other possibilities for integration that are applied in some IGCCs both involve the air separation unit. One possibility is air integration, which involves using extraction air from the combustion turbine compressor as feed air for the ASU. The air from the gas turbine is available at a higher pressure than would be required for a standard low-pressure ASU, so that generally air-side integration favors the use of an elevated pressure oxygen plant. The ASU main column then operates at a higher pressure (about 10 bar instead of 5 bar), so that oxygen and nitrogen streams are produced at a pressure of about 3 bar instead of 1 bar. Hence the power requirement for compression of gasifier oxygen (and nitrogen, if used for dilution) is reduced.

The general perception has been that the efficiency of the IGCC increases with a high degree of (particularly) air-side integration, so both Buggenum and Puertollano were designed with 100% air-side integration (i.e. 100% ASU feed air from the gas turbine). This proved difficult both with start-up (where the gas turbine must run during the time that the ASU is cooling down) and with overall control. The conclusion from both plants has been that 100% air integration contributes to a reduced availability, and leaving this design concept is a clear "lesson learned" from both units. A compromise that has gained consensus for many newer plants is one where only part (typically about 30%) of the air for the ASU is supplied as extraction air from the compressor of the gas turbine. The rest is supplied from a dedicated compressor in the ASU. This adds an extra piece of rotating equipment to the plant, but it facilitates the start-up and improves the overall availability of the plant.

It should be noted that two recent evaluations, based on different gas turbines have cast some doubt on the efficiency case for air-side integration (Hannemann *et al.*, 2007; Rieger *et al.*, 2007).

Nitrogen integration. Nitrogen integration uses the nitrogen stream from the ASU as diluent for the clean fuel gas to reduce the flame temperatures, and hence NO_x emissions. Also, it is advantageous here that the nitrogen already has an elevated pressure.

NO_x abatement with or without selective catalytic reduction

The hydrogen content of syngas gives it a higher flame front velocity than natural gas. For this reason, gas turbines firing syngas cannot use the current generation of premix designs of dry low NO_x burners and instead use diffusion burners. In order to achieve low levels of NO_x from the burner, the syngas must be diluted to ensure lower flame temperatures. Typical dilution gases are nitrogen, steam and CO_2. The effectiveness of these three gases at reducing NO_x emissions varies, with nitrogen the least and CO_2 the most effective. Although steam has been used – for example in Wabash – the gas turbine manufacturers tend to prefer nitrogen, since the heat transfer to the blades is less. Polk originally used only nitrogen, but retrofitted a saturator and reduced the NO_x emissions from 25 to 15 ppmv. Buggenum uses both nitrogen and steam, and achieves single digit NO_x.

However, if the permit requires natural gas equivalence at about 3 ppmv, then a selective catalytic reduction (SCR) unit in the HRSG is required. This has an impact on the desulfurization requirements. Part of the sulfur burnt in the gas turbine is converted to SO_3, and this reacts with any ammonia slip from the SCR to form ammonium bisulfate. The ammonium bisulfate deposits onto the downstream economizer surfaces, which then require washing. Provided the fouling can be kept to a washing cycle of about once a year, this can be considered tolerable. There is at present little information to define exactly how deep the sulfur removal must be to reduce washing to this level. According to an evaluation by GE, quoted in a paper by Heaven and DeSousa (2004), reducing the sulfur content of the syngas to 12 ppmv would achieve this. The theoretical alternative of reducing the ammonia slip is not considered realistic, at least not with a commercial guarantee. The conclusion is in any case that if an SCR is installed, it will require deeper desulfurization than otherwise.

Plant pressure and fuel gas expansion. Texaco and others have proposed the use of a quench IGCC design in which the gasification is conducted at a higher pressure of about 70 bar (see, for example, Allen and Griffiths, 1990). Additional power can then be generated by expansion of the clean fuel gas from 70 to about 20 bar, followed by gas reheat and firing in the gas turbine. The gas cooling by an expander can also be used to provide much of the refrigeration demand of a physical absorption desulfurization system (Zwiefelhofer and Holtmann, 1996). Fuel gas expansion is being used in two heavy oil IGCC plants at Falconara and Priolo in Italy, and this also increases the power generated in these plants.

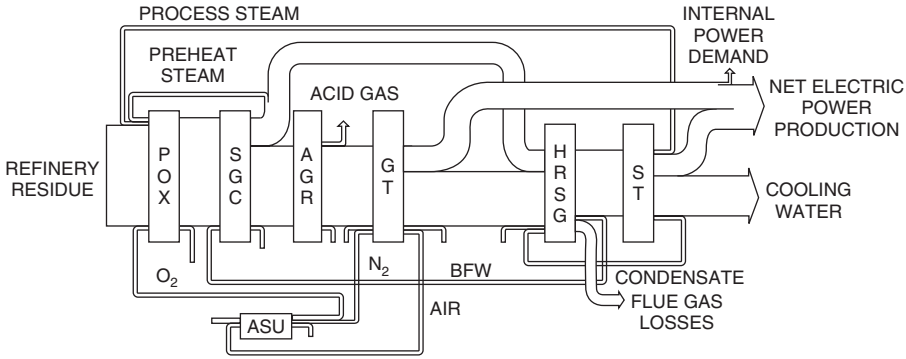

Figure 7.18 Sankey diagram of a residue-based IGCC.

Efficiencies. The efficiency of gasification is at best about 80%, which, assuming 60% for the CC, implies that the overall efficiency of an IGCC would not be much higher than $80 \times 60/100 = 48\%$. However, for virtually all gasifiers an oxygen plant (ASU) is required, and the gas treating also requires energy, and hence the efficiencies of the best first-generation plants are all below 45%. Even the lower figures that are reached require a fair amount of integration.

For the further understanding of the cycle, a Sankey diagram of a refinery residue-based IGCC is shown in Figure 7.18.

7.3.3 IGCC with CO_2 capture

Increasingly, regulators and environmental lobbyists are calling on IGCC to deliver its promise of being carbon-capture friendly now. Given that the possibilities for CO_2 sequestration (except for enhanced oil recovery) are largely undeveloped, it is debatable whether this is realistic, but it is certainly important for a developer to understand the technologies and options for an IGCC with carbon capture.

One of the most important things to understand is that the plant with capture is likely to look different, depending on whether capture was required from Day 1 or is the result of retrofitting a "capture ready" plant that was optimized for operation without capture. In the former case, it is likely that the plant will be equipped with a water quench and the syngas will be subjected to raw gas shift conversion immediately without any further cooling. The acid gas removal will be designed for selective removal of H_2S and CO_2 (Figure 7.19).

A plant initially optimized for operation without capture will probably have a syngas cooler (certainly the reference plants do) since the water quench would cost efficiency in the early years of operation. Installing a raw gas shift will increase the inlet volume to the AGR by between 40 and 60%, depending on the original gasifier selection. Furthermore, the CO_2:H_2S ratio in that gas will be an order of magnitude

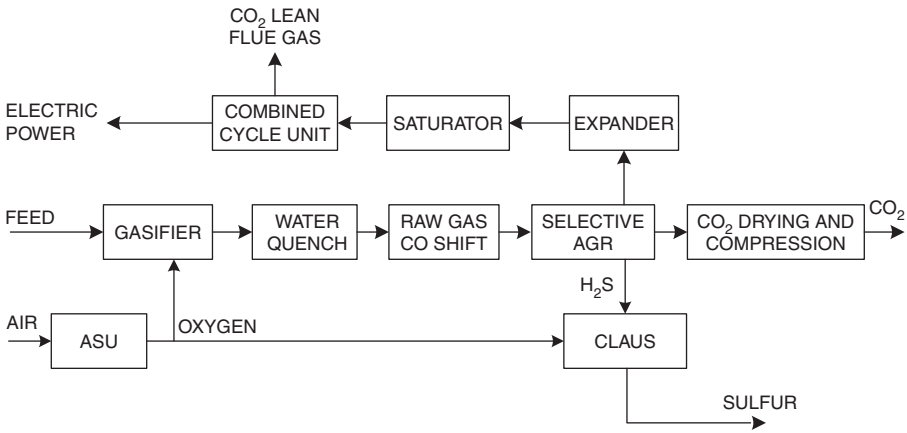

Figure 7.19 Block flow diagram of IGCC with carbon capture.

larger, making the original selectivity concept inappropriate. In such a case it is more likely that a clean gas shift would be installed, leaving the AGR and sulfur recovery untouched. A separate, optimized CO_2 removal would be included after the shift.

The second group of issues requiring attention center on the firing of hydrogen in the gas turbine, and its consequences. While there is not a large amount of industrial experience in firing hydrogen in gas turbines, there is in fact more than is generally appreciated. One example, described by GE as the "H_2 Fleet leader" is a frame 6B unit in Korea operating regularly on 85–97% hydrogen at "an availability of 96.5%+ running in uninterrupted operation, 24 hours a day over the year" since 1997 (Jones *et al.*, 2006).

An important aspect of hydrogen firing is the increased water content of the flue gas passing through the turbine stages. The enhanced heat transfer will increase the blade temperatures, thus reducing component life, unless countermeasures are taken. One typical countermeasure is to increase the airflow to the combustor, making less or no air available for extraction. This probably impacts the ASU, requiring a fully independent air supply. For this reason if CO_2 capture is planned, whether from initial start-up or from some ill-defined point in the future, it is probably better to optimize the plant on zero air-side integration.

7.3.4 Advanced cycles

Options for improving the Brayton cycle

Although the combined cycle already has a high efficiency, it has the disadvantage that two cycles are involved and much of the elegance of the simple Brayton cycle is lost. In relation to this, it is interesting to explore whether the Brayton cycle

cannot be improved in a similar way to that in which the Rankine cycle has been improved over time. Although both the Rankine and Brayton cycles have made use of the benefits of higher pressure ratios and higher temperatures, little has been done in the Brayton cycle to make use of features such as reheat and heat recuperation to improve the cycle efficiency.

Cycles can be made more efficient by preheating the medium of the cycle (water in the case of the Rankine cycle, and air in the case of the Brayton cycle) with low-level heat that is available at other points in the cycle. For example, in the Rankine cycle this is accomplished by using extraction steam from the expansion turbine to preheat the boiler feed water. In the Brayton cycle such preheat is only possible in gas turbines with a low-pressure ratio of 7–10 where the exhaust gas of the turbine has a higher temperature than the discharge air from the compressor. In that case, the sensible heat in the exhaust gas from the turbine may be used to preheat the air leaving the compressor in a so-called recuperator. In more advanced industrial turbines and aero-derivative turbines with pressure ratios of 15 and higher, the turbine and the compressor have about the same outlet temperature, which makes recuperation impossible. This is a serious disadvantage of more advanced gas turbines, and is due to the fact that virtually all gas turbine compressors feature adiabatic rather than isothermal compression. The same reason limits the use of reheat in gas turbine cycles. The very high pressures of 70–200 bar, which would be necessary for a realistic reheat cycle, prohibit the use of adiabatic compression.

Isothermal compression

The advantage of isothermal compression is not only that it makes reheat and recuperation possible, but also that it requires less energy than adiabatic compression, as is illustrated by the following formulae for the isothermal and adiabatic compression of an ideal gas.

Isothermal:

$$E = RT_{In} \cdot ln\left(\frac{p_{high}}{p_{low}}\right)$$

Adiabatic:

$$E = RT_{In} \cdot \frac{k}{k-1} \cdot \left[\left(\frac{p_{high}}{p_{low}}\right)^{\frac{k-1}{k}} - 1\right]$$

where E is the energy in J/mol, R is the universal gas constant of 8.314 J/mol·K, k is the isentropic exponent C_p/C_v of the isobaric heat capacity divided by the isochoric heat capacity, T_{In} is the inlet temperature of the compressor in K, and p_{high}/p_{low} is the pressure ratio of the compressor.

Taking air of 300 K, for which k is about 1.4, and a pressure ratio of 10, it is easily shown that for this case adiabatic compression requires 1.41 times the energy of isothermal compression. One should not be surprised by this large difference, as it must be kept in mind that the energy for heating the gas during compression is coming from shaft power that otherwise could have generated electric power. This heating is thus equivalent to electric resistance heating! In case of isothermal compression the air will be heated with additional fuel in the combustor, but there the heating takes place with virtually 100% efficiency, whereas via the shaft the heating takes place with an efficiency of about 40% based on fuel.

Many attempts have been made over the years to accomplish isothermal compression. The most obvious solution is to split the compressor into process stages and apply indirect interstage intercooling. Although this will lower the energy required for compression, it has the disadvantage that the compressor is split up into various parts and that the heat exchangers result in additional pressure drop for the air flow.

An example of a real industrial application of a more isothermal compression is the Sprint gas turbine, which features a water spray injection between the two compressor stages of a General Electric LM6000 aero-derivative gas turbine (McNeely, 1998). This so-called wet compression as a means to accomplish isothermal compression has often been proposed in the past, but was never applied (Milo, 1936; Société Rateau, 1952; Beyrard, 1966; Brown Boveri & Cie, 1968). The main purpose of the water spray in the Sprint gas turbine is to increase the capacity of the turbine for power generation, but at ambient temperatures above 5°C it also increases the efficiency of the power plant.

Combinations of isothermal compression and recuperation

All major improvements in gas turbine-based cycles concern the use of a more isothermal compression and recuperation. The highest efficiencies are achieved by so-called Humid Air Turbines (HAT) in combination with heat recuperation from the turbine exhaust gases. The cycles involved are called HAT cycles. Two HAT cycles will be discussed: the HAT cycle and the Tophat cycle.

The HAT cycle

In the HAT cycle, a flue gas heat recuperator replaces the heat recovery steam generator (HRSG). In the recuperator, the sensible heat in the hot exhaust gases leaving the turbine are used to preheat humidified combustion air and water (Schipper, 1993). The combustion turbine air compressor is intercooled and cooled after final compression (aftercooling). The heat recovered in these cooling steps preheats

additional water, and the hot water humidifies the pressurized combustion air in a multistage, counter-current saturator. The major disadvantage of this scheme is that instead of a compressor and a turbine as in a normal gas turbine, many more pieces of rotating equipment are required in the form of an additional compressor and pumps. Moreover, large spray columns are required for humidifying the water to be injected into the air, and finally, the heat in the hot gases leaving the turbine is used for the low-temperature service of preheating and evaporating water.

Various modifications of the HAT cycle have been proposed, such as the Cascaded HAT (CHAT) cycle (Nabhamkin, 1995), but all suffer from one or more of the disadvantages mentioned above. The only exception is the Tophat cycle discussed below.

The Tophat cycle

The reason why wet compression (i.e. humidifying the air during compression inside the compressor) has found such limited application is most likely due to the fact that most atomizing devices available today can only produce water droplets with a diameter of 30 μ or higher. Smaller droplets can be made, but this requires generally complex and/or bulky equipment. An alternative for small droplets is the use of spray towers, as in HAT cycles, which result in additional pressure drops. This is a pity, as in wet compression good use is made of the unique high heat of evaporation of water, whereas this same characteristic is a disadvantage for the Rankine cycle.

Only recently has an elegant and compact method been proposed for making small droplets. This has made it possible to inject an extremely large amount of water into the atmospheric air entering the air compressor or into the compressor itself.

Flow scheme. The flow scheme of the Tophat cycle is shown in Figure 7.20 (van der Burgt and van Liere, 1996). The water is injected into the air A entering the compressor in such a way that the compressor does not suffer from a parasitic pressure drop. It is injected in the form of very fine droplets of a mean diameter of about 1–3 μm. These droplets, which can be made by combining flash evaporation with efficient atomizers as in the "swirl flash technology" (van Paassen and van Liere, 1980), are so small that the droplets will (a) evaporate in the milliseconds available in the compressor, (b) will not cause erosion problems, and (c) will follow the path of the gas stream without being centrifuged out. The humidified air B leaving the compressor at the required pressure is essentially saturated with water. In a recuperator, the humidified air is heated with the hot exhaust gases leaving the turbine to a temperature of, say, 50–100°C below the turbine outlet temperature before being routed to the combustor, where the hot air is used for the combustion of the fuel. The hot pressurized flue gas C then enters the turbine. The exhaust gas D leaving the turbine preheats the humidified air and, if required, the fuel. After leaving the recuperator the water in the exhaust gas is routed to a condenser, after which

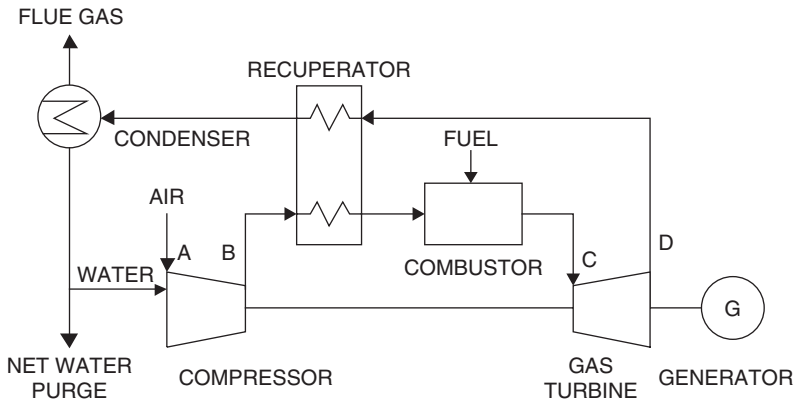

Figure 7.20 Tophat cycle.

the dry exhaust gas leaves via the stack. The condensate is partly recycled, and the surplus is purged from the system.

Quasi-isothermal compression. The compression as proposed for the Tophat cycle is not completely isothermal, but quasi-isothermal. In practice, it results in a temperature rise over the compressor that varies from about 100 to 175°C for discharge pressures of 8 to 32 bar respectively. This is based on starting with ISO air (15°C and a moisture content of 1.19 mol%) and using injection water of 200°C. This is clearly illustrated in Figure 7.21(a) (data for an isentropic efficiency of the compressor of 87%).

Thus quasi-isothermal compression requires less energy per unit (kmol/s) ISO-air than adiabatic compression. This advantage increases with the pressure ratio, as illustrated in Figure 7.21(b).

The greatest advantage of isothermal compression is that now it becomes advantageous to have a recuperator in which the sensible heat in the gases leaving the turbine is used to preheat the air leaving the compressor. This heat, which in a combined cycle is used to drive an additional steam cycle, is now used in the more efficient and less costly Brayton cycle itself.

The recuperator. Recuperators – or flue gas heated air preheaters – play an important part in some synthesis gas technologies such as steam reforming, but have not found favor in connection with gas turbines, whether in IGCC or standard applications. This is a logical outcome of the concentration on adiabatic compression and the fact that the outlet temperatures of air compressor and gas turbine are too close for a recuperator to have any important effect. Also, the use of a recuperator with a quasi-isothermal compression with the use of intercoolers as used in process gas compressors does not have any beneficial effect, since even if the heat removed via the intercoolers is used for, say, boiler feedwater preheat, it transfers heat from the

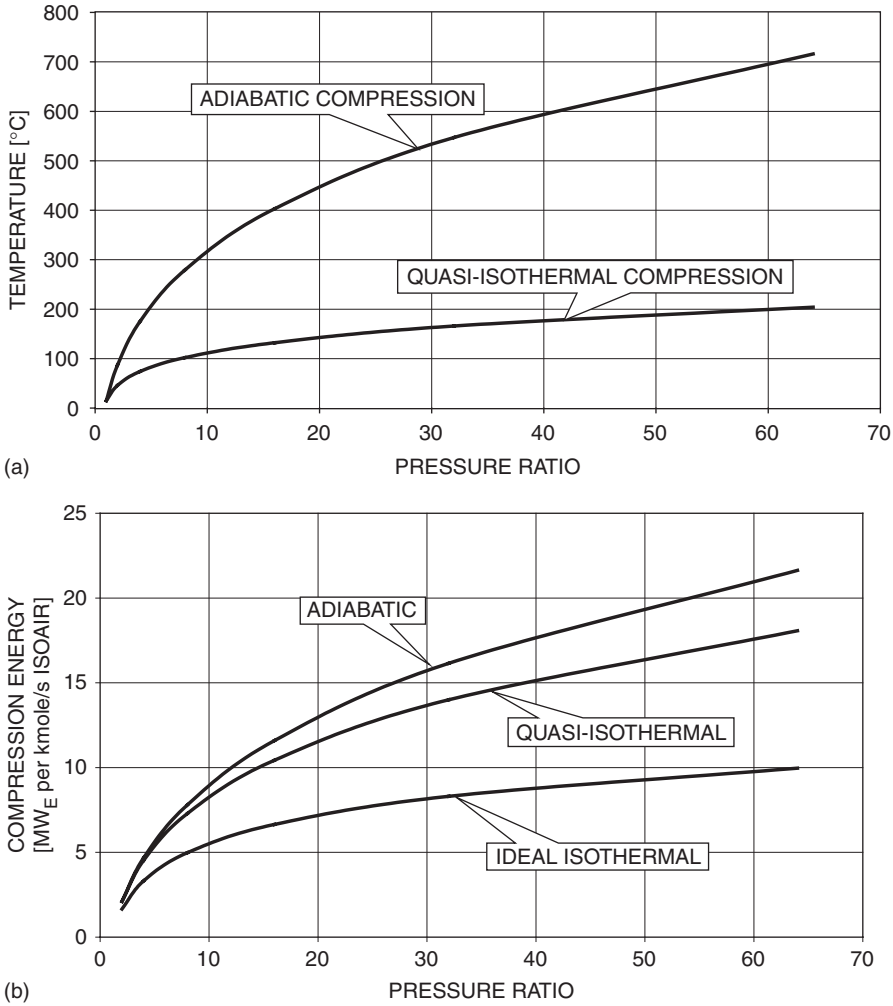

Figure 7.21 (a) Compressor discharge temperatures as function of compression ratio; (b) compression energy for adiabatic and isothermal compression.

gas turbine cycle to the less efficient steam cycle. This is different in the Tophat cycle, since the heat is used to increase the mass entering the gas turbine by evaporating water into the combustion air.

Arguments are sometimes raised against recuperators because of the poor heat transfer and large surface area involved. These arguments are, however, generally superficial. The steam superheater in an HRSG is also a gas–gas exchanger with similar heat transfer coefficients as in the air preheater in a steam reformer, and both are successful components in their respective environments.

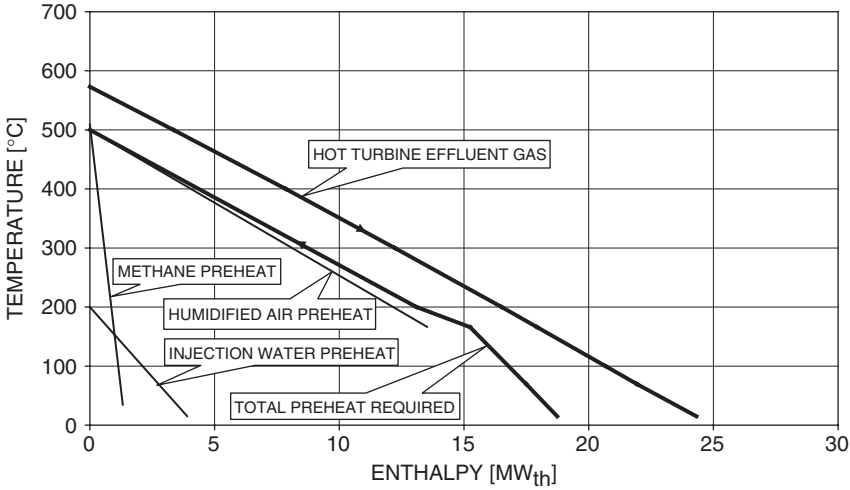

Figure 7.22 Typical recuperator enthalpy-temperature diagram.

Furthermore, the construction of the headers and so on is much lighter than the equivalent HRSG steam superheater, which reduces problems related to thermal shock. Assuming that the Tophat stations will be started-up and shutdown as frequently as the alternative of combined cycles, the point of thermal shock is not very relevant. The reason is that the metal temperatures and temperature cycles are about the same when the preheat temperature of the humidified air is restricted to the superheat temperature of the steam in a CC.

Moreover the recuperator has a very smooth temperature profile in the steady state. Because the heat exchange is restricted to the exchange of sensible heat (gas–gas and gas–water) the enthalpy supply and demand lines are almost parallel, as is illustrated in the typical example in Figure 7.22. In this example the humidified air and the fuel gas are both preheated to 500°C, and the water used for evaporation during compression is preheated to 200°C. As can be seen, there is hardly any pinch. For the case in question, the hot exhaust gas, after having preheated the humidified air, the natural gas and the water, has a temperature of about 145°C.

The water cycle. The distillate quality water required for injection can be obtained by condensing the water in the exhaust gas. This gas has then to be further cooled after it leaves the recuperator. This can advantageously be accomplished in a two-stage direct contact condenser. The first condensate, comprising 5–10% of the water present in the exhaust gas, contains virtually all the solids contained in the combustion air and the fuel that have acted as condensation nuclei. This water can be used as a purge in order to avoid build-up of solid contaminants in the system. The pure condensate from the second stage can then be used for humidifying the air.

The use of indirectly cooled condensers does not look attractive because of the large amount of inert gases in the exhaust gas, as this results in very large heat

exchange surfaces and hence costly equipment. Sometimes indirect cooling may be economical, though, when the heat is utilized in a combined heat and power system involving, for example, district heating or seawater distillation.

An important point is, of course, whether cooling water is available. On ships and for offshore applications, this will never present a problem. In arid areas, air-cooling or a cooling tower must be used. As all fuels contain hydrogen, there is always a net production of water. In arid areas, this is advantageously used for irrigation. In the case of natural gas, the mass of net water produced is about equal to the mass of the fuel.

The Tophat cycle efficiency. The efficiency of the Tophat cycle is very dependent on the temperature difference between the hot turbine exhaust gases entering the recuperator and the humidified air leaving the recuperator. Typically, for a 30°C decrease in the recuperator temperature difference there will be an increase of about 1 percentage point on the overall cycle efficiency.

Also, in the Tophat cycle the turbine inlet temperature is a factor in relation to efficiency, although it should be realized that raising the inlet temperature of the turbine is not so important for the Tophat cycle as for a combined cycle. The reason is that because of higher inlet temperatures, a high pressure ratio is required and also the temperature of the gases leaving the turbine is generally increased. Hotter exhaust gases would lead to higher maximum temperatures in the recuperator and hence imply the use of more expensive steels for this service. For this reason, the maximum preheat temperature of the humidified air was limited to 500°C so as to keep the maximum metal temperatures in virtually all cases to below 550°C. With these restrictions, there is not much effect in raising the inlet temperatures above 1300°C.

Station efficiency and NO_x control. The biggest advantage of the Tophat cycle in respect of NO_x control is the fact that the stoichiometric adiabatic flame temperatures (SAFTs) are so low. As is well known, lower SAFTs result in lower NO_x emissions. In the standard Brayton cycle, higher station efficiencies are obtained by increasing both the pressure ratio and the turbine inlet temperatures, resulting in higher SAFTs. Using quasi-isothermal compression as applied in the Tophat cycle generally leads to lower SAFTs for stations with a higher efficiency. This is clearly illustrated in Figure 7.23, where SAFTs are plotted against station efficiencies for various cases: a Brayton cycle; a Tophat cycle; and a case where only quasi-isothermal compression (without recuperator) is used. The reason for the low SAFTs of the quasi-isothermal compression cases is the low oxygen content and the higher moisture content of the air (see Figure 7.24).

Applications. The high efficiency of the Tophat cycle of 60% or more makes it attractive for many applications, apart from as a replacement for combined cycle stations. The fast start-up and the absence of a steam cycle make it attractive for many applications where open cycles are now used. Examples include peak shaving; the use of gas turbines in ships, offshore applications and liquid natural gas (LNG) plants; combined heat and power schemes; and so on. The fact that Tophat cycles can be applied for duties from, say, 500 kW upwards means that they can even be considered for trucks, locomotives, off-road vehicles and mining equipment.

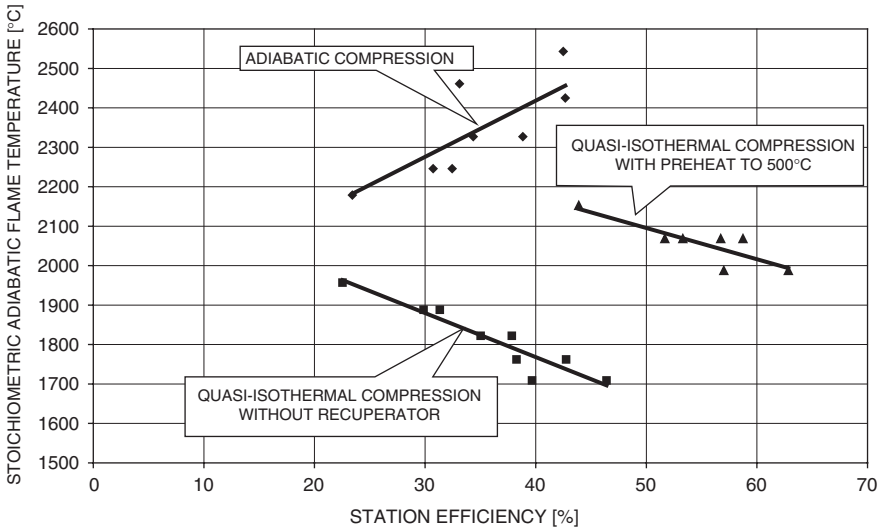

Figure 7.23 Relationship between stoichiometric adiabatic flame temperature and station efficiency.

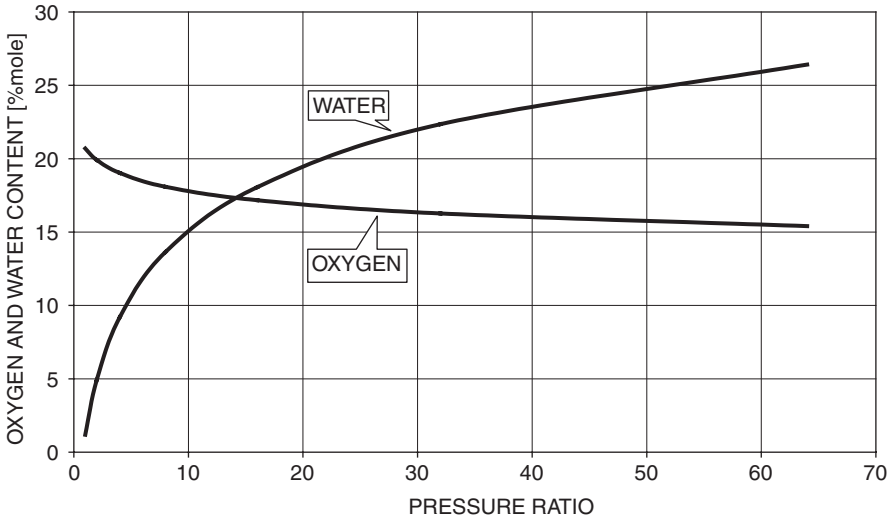

Figure 7.24 Oxygen and water content in humidified air.

7.3.5 Flue gas treatment

The loss of efficiency involved in cycling of gas temperatures between hot and cold parts of an IGCC has been pointed out on many occasions, and has been one of the

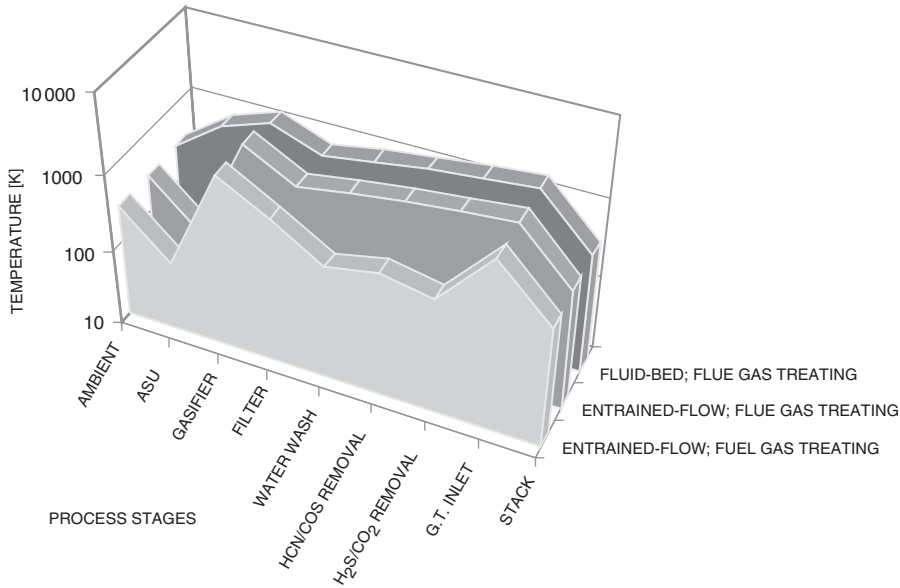

Figure 7.25 Temperature profiles of various types of IGCC power stations.

principle driving forces behind attempts at a hot, or at least warm, fuel gas clean-up. All current development efforts are based on performing all the gas clean-up on the fuel gas side of the gas turbine, not least because many of these techniques are available from chemical applications. In this section we wish to review the possibilities for reducing the fuel gas treatment to the absolute minimum required by the gas turbine – which, after all, can operate on (sulfur containing) fuel oil – and perform the rest of the gas clean-up as flue gas treatment, as in the rest of the power industry.

IGCC temperature profiles

The ideal process for power generation from fossil fuels using combustion would feature a steady rise followed by a steady drop in temperature and pressure, in such a way that little heat and pressure energy is wasted. An open Brayton cycle with heat recuperation comes close to this ideal. A conventional IGCC is, however, very far from this situation, as on the one hand part of the gas stream has to be cooled to −190°C in the ASU, and on the other hand the gas leaving the high temperature gasifier has to be cooled for desulfurization before being heated for the second time in the gas turbine combustor.

Figure 7.25 shows the temperature profile as encountered in a conventional IGCC with fuel gas treatment (front profile) and in an IGCC with flue gas treatment for an entrained-flow gasifier (middle profile). For comparison, an air-blown fluid-bed

gasifier with flue gas treatment is also shown (back profile). The temperature scale is logarithmic because it reflects somewhat better the thermodynamic repercussions of the temperature cycling, since the ratios between the various temperatures are more important than the absolute temperature differences.

Each kink in the diagram refers to the unit mentioned along the abscissa. Straight lines between kinks imply that the units in between are not present. It is clear that flue gas treating gives a temperature pattern with fewer temperature swings. It should be noted, however, that the cryogenic temperature applies only to the air going to the ASU, whereas the high gas inlet temperature of the turbine applies to a gas mass flow, which is about a factor of 5 higher.

With flue gas treating instead of fuel gas treating, the sensible heat in the fuel gas, corresponding to 5–10% of the LHV of the fuel, and the heat of combustion of H_2S and COS, corresponding to 0.5–1% of the LHV of the fuel gas, can be utilized in the combined cycle, and no COS removal unit is required.

Comparisons of gas-treating schemes

We have made some simple comparisons for various configurations so as to investigate the potential represented by flue gas treatment without, at this stage, the constraint that all technology must be existent and proven today. All calculations were made on a consistent basis as described in Appendix E. Before presenting and discussing the results of these studies, two important aspects need to be discussed; namely the gas cleaning concept and the effect of flue gas recycle, which are integral components of the concept.

Gas treating

Developing a minimum gas treatment concept for the gas turbine involves removal of any solid particulate material in the gas and removing any gaseous components that could become solid under conditions that might be experienced in the turbine or HRSG. For this reason, particulate removal must take place at a temperature that is sufficiently low that alkali compounds can be removed as solids and so present no risk of forming corrosive alkali (hydro-)sulfates. This temperature is about 500°C, which represents an upper bound for the particulate removal. The lower bound is governed by the ammonium chloride sublimation temperature, and lies at about 280–300°C. After filtering out the fly ash on which the volatile alkali compounds and other metal compounds have been deposited (the fly ash acting as a substrate), volatile sulfur, nitrogen and arsenic compounds, as well as mercury, may pass through the turbine without causing problems during operation. (Any trace arsenic deposits in the gas turbine may, however, require additional precautions during maintenance.) Within this allowable range of 280–500°C it is preferable to remain close to the upper limit of 500°C for efficiency reasons. Filtering at a temperature of 500°C is possible with candle filters. Looking purely at the gas

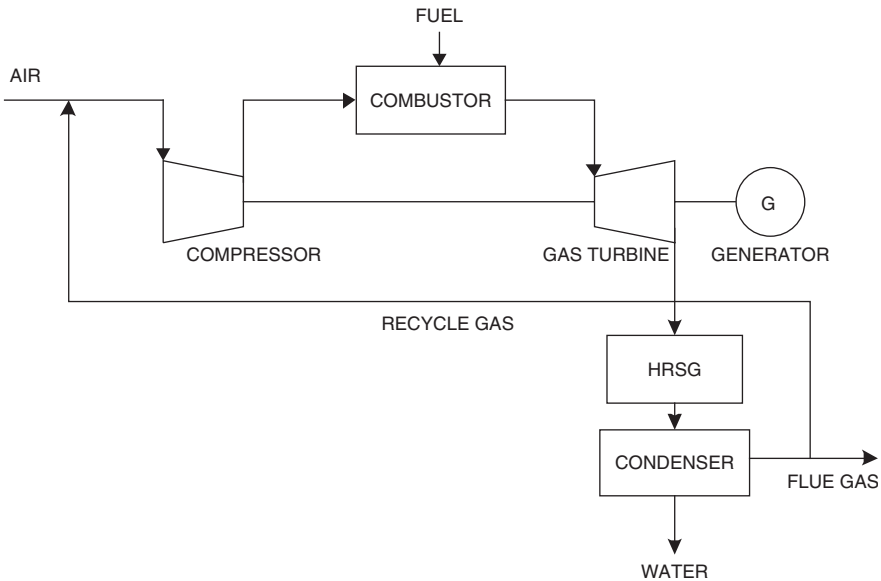

Figure 7.26 Flow scheme for combined cycle power station with flue gas recycle.

turbine requirements, this represents the minimum fuel gas clean-up concept. All other pollutants will require post-combustion removal, as in current conventional PC technologies.

Flue gas recycle

The potential of flue gas recycle is a neglected area of cycle design. It has significant advantages for both natural gas and syngas-fired gas turbine-based power generation where gaseous components such as CO_2 have to be removed from the flue gas, as well as in terms of extremely low thermal NO_x emissions.

Before discussing its use in syngas applications, we will review its effect on a natural gas-fired combined cycle plant. The basic concept is to replace most of the excess air to the burner by recycled fuel gas, which is compressed in the air compressor. A flowsheet is given in Figure 7.26. The mass and energy balances, the gas compositions, and temperatures and pressures for plants without and with flue gas recycle are given in Tables 7.11 and 7.12, respectively.

The calculations have been made on the basis of 1 kmole of methane fuel and LHVs are used throughout. The gas turbine used has a pressure ratio of 32, an inlet temperature of 1350°C and an isentropic efficiency of 90%. Neither temperature losses nor pressure losses have been taken into account. The overall efficiencies are calculated as follows: it is assumed that 30% of the HRSG duty is converted into

Table 7.11
Flow data and gas compositions for methane-fired combined cycle

Flow	Air to compr.	Comp. duty	Air ex compr.	Fuel	Gas to turbine	Gas ex turbine	Turbine duty	HRSG duty	Water ex scrubber	Stack gas
kg	762		762	16	778	778			27	751 = 25.9 kmol
MJ	0	427	427	803	1230	436	794	436	0	0
Temp. (°C)	25		556	25	1350	534			25	25
Pressure (bar)	1		32	32	32	1			1	1
mol%										
CO_2	0.03		0.03		3.67	3.67				3.88
H_2O	1.19		1.19		8.43	8.43			100	3.15
O_2	20.70		20.70		12.66	12.66				13.39
N_2 + Ar	78.08		78.08		75.24	75.24				79.58
CH_4				100						

Table 7.12
Flow data and gas compositions for methane-fired combined cycle with recycle of flue gas

Flow	Gas to comp.		Comp. duty	Gas ex comp.	Fuel	Gas to turbine	Gas ex turbine	Turbine duty	HRSG duty	Water ex scrubber	Stack Gas
	Air	Rec. gas									
kg	331	403		734	16	750	750			33	314 = 10.7 kmol
MJ	0	0	401	401	803	1204	440	764	440	0	0
Temp. (ºC)	25	25		539	25	1350	551			25	25
Pressure (bar)	1	1		32	32	32	1			1	1
mol%											
CO_2	0.03	9.41		5.13		8.76	8.76				9.41
H_2O	1.19	3.15		2.26		9.82	9.82			100	3.15
O_2	20.70	3.51		11.35		3.27	3.27				3.51
$N_2 + Ar$	78.00	83.93		81.26		78.15	78.15				83.93
CH_4					100						

power via a Rankine (steam) cycle, and that there are 2% mechanical losses in the Brayton (gas) cycle:

$$\{(794 - 427) \times 0.98 + 436 \times 0.30\} \times 100/803 = 61.1\%$$

for the classical combined cycle base case, and

$$\{(764 - 401) \times 0.98 + 440 \times 0.30\} \times 100/803 = 60.7\%$$

for the cycle with flue gas recycle.

These figures should, of course, only be used on a comparative basis. What may be concluded, though, is that the efficiencies are about equal, but the quantity of gas to be treated in case of the recycle is only $10.7/25.9 \times 100\% = 41\%$ of that of the base case. Furthermore, the CO_2 concentration is 9.4 mol% versus 3.9 mol% for the base case. In other words, it brings the concentration of a natural gas-fired unit up to that of a conventional boiler or furnace. The cold stack gas after a wash is a problem that has to be solved in all cases having scrubbing/wash facilities in the stack gas. The gas may have to be heated for buoyancy reasons.

An important additional advantage is that the SAFT, which is a good indicator for thermal NO_x emissions, is only 1640°C for the recycle base and 2380°C for the base case. This will result in an extremely low thermal NO_x formation. Since in the case of natural gas firing this is the only source of NO_x, this means that the only gas to be removed is CO_2, assuming no sulfur is present in the gas.

Low NO_x burners are not required, but standard gas turbine burners probably have to be modified because of the lower oxygen content in the gas. Furthermore, good mixing of the air and the recycle gas is required.

Neither the compressor nor the turbine itself need modification, as the gases they have to cope with are, both in quality and quantity, not very different from those in the base case.

Comparison of results

The results of these studies are shown in Table 7.13, in which efficiencies are given for IGCC plants with fuel gas treating and with flue gas treating. In both cases, the efficiencies with and without CO_2 removal are given.

Some comparisons have already been made in section 5.3. The following additional conclusions can be drawn from these data:

- The penalty in efficiency when including 90% CO_2 removal from the fuel gas is 4–5 efficiency points.
- In all cases, flue gas treating could well be a more attractive means for CO_2 removal than fuel gas treating. In cases where all acid gases can be removed

Table 7.13
Efficiencies of various IGCC power stations with and without CO_2 removal facilities

Process			Fuel gas treating		Flue gas treating	
Feed	**Gasifier conditions (bar/°C)**	**Syngas cooling**	**Without CO_2 removal**	**With CO_2 removal**	**Without CO_2 removal**	**With CO_2 removal**
Slurry	64/1500	Water quench	37.8	35.5	43.0	39.7
Slurry	64/1500	Gas quench	43.6	39.4	43.1	39.8
Extreme preheat slurry	64/1500	Gas quench	48.8	43.7	49.6	46.3
Dry	32/1500	Gas quench	50.0	44.5	50.6	47.3
Dry	32/1500/1100	Coal quench	50.9	45.5	51.5	48.2
Dry	32/1100	Water quench			51.5	48.2
Supercritical steam power plant					45	41.7

Note: Efficiencies based on standardized, idealized conditions of Appendix E.

together from the flue gas and then be sequestered together, this would mean a major advantage in terms of efficiency and in terms of process simplification.

- Apart from flue gas recycle over the gas turbine (to the air inlet), attention should be paid to the fact that the fuel gas to the gas turbine will have a large volume due to the presence of inerts and because of the preheat. As a result of the inerts, the gas has a relatively low heating value.
- Due to the flue gas recycle to the air inlet, the air is diluted and has a low oxygen content. The dilution of both the fuel gas and the air will require special measures in the combustion chamber. On the other hand, the fact that both gases will be preheated will make the combustion less difficult. It may be expected that not only the thermal NO_x formation, but also the SO_3 formation will be low.
- Many power station operators are already used to flue gas treating.
- Using nitrogen as quench gas or dilution gas in combination with flue gas treating may not be attractive, as it lowers the concentration of acid gases in the flue gas.

- Flue gas treating with recycle opens the possibility of applying high-efficiency air-blown fluid-bed gasifiers in power-generation schemes because of the low temperature difference between the gasifier and the high-temperature filtering step. The combination of fluid-bed gasification and flue gas treating will only be attractive when the capital costs are low and the efficiency is not lower than that of most entrained-flow slagging oxygen-blown gasifiers.
- Gasification-based power stations have the potential of about 5 percentage points better efficiency than a conventional coal-fired power station featuring a supercritical steam cycle.

When CO_2 must be removed from the flue gas, an additional complication is introduced. One solution is to shift all the CO to hydrogen and remove the CO_2 from the fuel gas. This removes 7–10% of the LHV of the fuel gas from the combined cycle. Altogether, fuel gas treating loses between 10 and 15% of the LHV in the raw gas and transfers it to the steam cycle, which has an efficiency of 40% as opposed to the 60% of the combined cycle. This corresponds to a penalty of 2–5% in station efficiency when compared with flue gas treating. However, where CO_2 has to be removed, more than half of the energy gain for flue gas treating will be lost due to the additional CO_2 compression required.

Additional observations

Although flue gas treating has advantages, the following should be observed:

- Flue gas treating is only a possible option in power generation schemes. In the case of syngas production, fuel gas treating is always the way to go.
- Flue gas recycle is mandatory for flue gas treating, as otherwise the concentrations of the components to be removed are too low and the amount of gas to be treated is too high.
- Thermal NO_x production can be made extremely low by flue gas recycle or quasi-isothermal compression. The NO_x production originating from organic nitrogen in the feed that has been converted into HCN or NH_3, which yield NO_x upon combustion, is low and may be acceptable some cases. Research using CFD may show that the formation of HCN and NH_3 during gasification can be reduced. Moreover, it is worth exploring whether the conversion of these compounds into NO_x can be reduced by lower SAFTs in the gas turbine combustors. CFD may help to solve this problem as well.
- Flue gas treating will become easier if there is no NO_x to be removed.
- Flue gas treating for sulfur removal is as yet generally not better than 95%, but this may be acceptable in many cases. It should be kept in mind that the SO_x emissions per kWh with 95% removal by stack gas scrubbing of an internationally traded coal having a sulfur content of 1% is about the same as for fuel gas treating with a 4% sulfur coal of which 99% of the sulfur is removed by fuel gas treating.

- In case of CO_2 sequestration, it is important to explore the possibility of removing and sequestering all contaminants together.
- Mercury, arsenic and antimony are present in coals having a high pyrite/cinnabar content. To date, these compounds can only be removed by fuel gas treating. In feedstocks with a low pyrite/cinnabar content, these compounds may not result in unacceptably high concentrations in the flue gas. This is certainly the case for heavy petroleum based residues.

Gas turbine improvements

In this section on advanced cycles we have sketched out a number of possibilities through which IGCC efficiencies could be improved. It must, however, be stated that their realization is dependent on changes being made to the design of existing gas turbines, whether in the use of quasi-isothermal compression or accommodating a flue gas recycle. This will require considerable research and development effort investment by the manufacturing organizations. There is some work being performed in the area of flue gas recycle (Tukagoshi *et al.*, 2005; Wolf *et al.*, 2006).

7.3.6 Gasification and fuel cells

Another approach that has received a lot of attention is the combination of gasification with fuel cells that can convert the chemical energy in pure hydrogen directly into electricity. The gas produced by gasification is especially suitable for this purpose, as the main additional treatment required is a CO shift that will convert all CO in the gas to additional hydrogen. Much development work has still to be done on fuel cells. Several types of fuel cell are being developed, including solid oxide (SOFC), molten carbonate, phosphoric acid and proton-exchange membranes. At this stage of development, it appears that the higher-temperature solid oxide and molten carbonate systems would best integrate with gasification-based systems for central station power production. The problem is that the gas for the fuel cells must be extremely pure. The target for natural gas is 70% efficiency, but our expectation is that by the time this can be realized the same efficiency will be reached with more advanced IGCC or similar cycles.

In combination with gasification, the fuel cell is used in a topping cycle to the gas turbine of an IGCC (see, for example, Ghosh and De, 2004). The SOFC fuel cell operates typically in the temperature range 800–1000°C. Various models have been developed for heat integration, and that in Figure 7.27 is typical.

One characteristic of the SOFC is its ability to process CO by means of the reverse shift reaction, or methane by means of internal reforming. This allows the direct use of desulfurized syngas without the efficiency losses involved in producing pure hydrogen. Both reverse shift and reforming provide a degree of internal cooling in the cell – the latter about five times more than the former. Hansen and colleagues

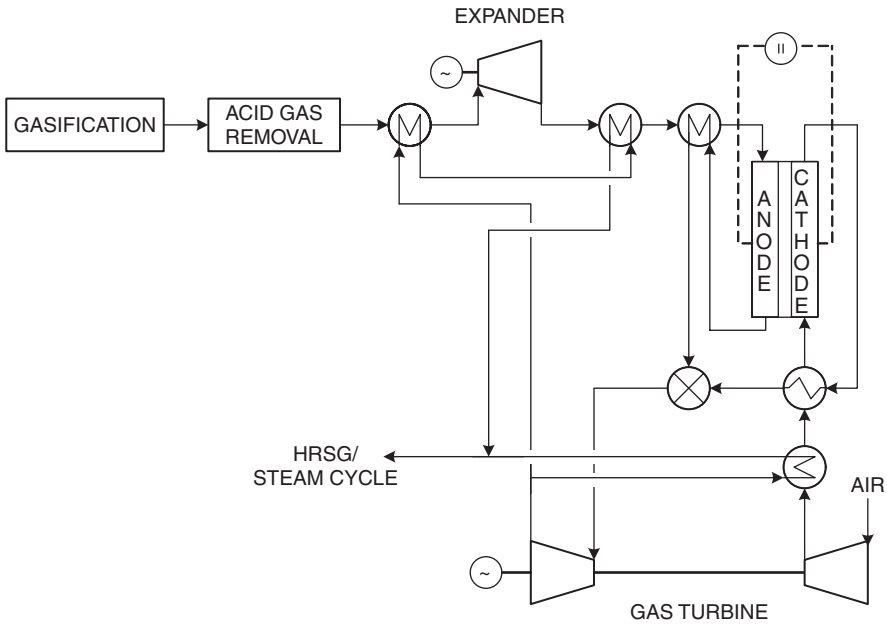

Figure 7.27 Fuel cell-boosted IGCC.

(2007) have suggested that external pre-methanation of most of the carbon monoxide content of the syngas can improve the efficiency of the fuel cell cycle.

7.3.7 Energy storage

Following the fluctuating grid demand for electricity is a problem as old as power stations. In principle, there are two solutions to cope with this problem: frequent shutting down and starting-up, or storing energy in such a way that the power station can run continuously while following the demand pattern. In both cases, additional equipment is required that stands idle for part of the time. Even in the extreme case that electricity could be stored as such, additional equipment would be required.

When low capital cost power stations with a high efficiency can be built that can be started-up and shut down within minutes, then in most cases no energy storage will be required. Topping units using only gas turbines and diesel generators are relatively low cost, but have a low efficiency of about 40%. The Tophat cycle discussed in section 7.3.4 with an efficiency of about 60% comprising only a gas turbine could be a possible candidate if fast start-up gas turbines such as aero-derivatives are used. However, even in this case it is more advantageous to run the gas turbine proper continuously and opt for energy storage.

Of the various options for energy storage, such as flywheels, magneto-hydrodynamic rings, reversible chemical reactions, pressurized air in underground strata and hydro-electric pumped storage, only the latter has become commercially successful. All the other options appear to have severe drawbacks that make them, at least in the short and medium term, unlikely candidates to solve the problem of efficient large-scale energy storage. On a smaller scale, as required for IGCC power stations, there are a number of options that are discussed below. These can be divided into the production of intermediate peak shaving fuels, methanol, and storage of liquid oxygen.

Peak shaving fuels

In the past, it has been suggested that methanol, Fischer-Tropsch liquids or dimethyl-ether be produced from synthesis gas during the off-peak hours, and then these clean fuels be used as additional gas turbine fuels during the peak hours. It should be realized, though, that all these options are capital intensive, and that the "battery" efficiency of all these options is low – at best, 70–80%. Moreover, these options require very pure synthesis gas and hence additional gas treating facilities and CO shifting. All these conversion processes mean that the overall efficiency of the fuel conversion train will be negatively affected.

Methanol

Of these options methanol is still the most attractive, as this product can be made with an almost 100% conversion of the synthesis gas in a single-stage reactor and it has the lowest heat of reaction and hence the highest conversion efficiency. Fuel-grade methanol can be used, which will reduce the capital cost and increase the process efficiency slightly. Further, methanol may be reformed back into synthesis gas with low-level heat of 300–350°C, which will increase the efficiency of the overall fuel conversion train. The battery efficiency of methanol is over 80%.

Liquid oxygen storage

Some storage of liquid oxygen is always required in IGCC power stations in order to cope with sudden changes in demand. In order to use the oxygen for peak shaving, generally a much larger storage capacity is needed. This does increase the capital cost of the plant, but has the advantage that the ASU has to be designed not for the peak demand but for the average daily demand. It is therefore a matter of balancing these two cost items against each other. It should be mentioned that, apart from the additional storage capacity required for liquid oxygen, means also have to be installed to recuperate the cold generated upon evaporation of the oxygen.

REFERENCES

Agee, M. (2002) The natural gas fefinery. *Petroleum Economist*, January.

Allen, R.W. and Griffiths, J. (1990). "The application of hot gas expanders in integrated gasification combined cycles". Paper presented at IMechE Conference "Power Generation and the Environment". London.

Amick, P. (2004). "E-Gas Technology for Gasification 2004", Gasification Technologies Conference, Washington, DC.

Appl, M. (1999). *Ammonia: Principles and Industrial Practice*. Weinheim: Wiley-VCH.

BASF. (undated). *BASF Catalyst K 8-11*, Technical Leaflet. Ludwigshafen: BASF AG.

Becker, P.D., Hiller, H., Hochgesand, G. and Sinclair, A.M. (1971). Heavy fuel oil as ammonia plant feedstock. *Chemical and Process Engineering*, November.

Benedict, D.E., Lilly, R.D. and Kornosky, R.M. (2001). "Liquid phase methanol process development demonstration plant availability". Paper presented at Gasification Technologies Conference, San Francisco.

Beyrard, M.N.R. (1966). Perfectionnements aux installations fixes de turbine à gas. French Patent 1467142.

Boerrigter, H., den Uil, H. and Calis, H.-P. (2002). "Green diesel from biomass via Fischer-Tropsch synthesis: new insights in gas cleaning and process design". Paper presented at Pyrolysis and Gasification of Biomass and Waste. Expert Meeting, Strasbourg.

Brown, Boveri and Cie (1968). Gasturbinenanlage mit Wassereinspritzung. Swiss Patent 4570391968.

Comtes700 (2007). *Component Test Facility for a 700°C Power Plant*. Available at www.comtes700.org, retrieved 18 July 2007.

Davey, W.L.E., Wurzel, T. and Filippi, E. (2003). "'Megammonia' – the mega-ammonia process for the new century". Paper presented at Nitrogen 2003, Warsaw.

de Graaf, J.D., Zuideveld, P.L., Posthuma, S.A. and van Dongen, F.G. (1998). "Initial operation of the Shell Pernis residue gasification project". Paper presented at IChemE Conference "Gasification: The Gateway to a Cleaner Future", Dresden.

Derbyshire, F. and Gray, D. (1986). Coal liquefaction. In: *Ullmanns Encyclopedia of Industrial Chemistry*, 5th edn, vol. A7. Weinheim: VCH Verlagsgesellschaft, pp. 197–243.

Dittus, M. and Johnson, D. (2001). "The hidden value of lignite coal". Paper presented at Gasification Technologies Conference, San Francisco.

Dolinskovo, A.A. and Brodianski, B.M. (1991). *Ексергетические Расчеты Технических Систем*. Kiev: Naukova Dumka.

European Commission (2001). "*Green Paper: Towards a European Strategy for the Security of Energy Supply*". Brussels: European Commission.

Ghosh, S. and De, S. (2004). First and second law performance variations of a coal gasification fuel-cell-based combined cogeneration plant with varying load. *Journal of Power and Energy*, 218(A7): 477–485.

Göhna, H. (1997). "Concepts for modern methanol plants". Paper presented at 1997 World Methanol Conference, Tampa.

Hannemann, F., Shingnitz, M. and Zimmermann, G. (2007). "Siemens IGCC and gasification technology: today's solutions and development". Paper presented at 2nd International Freiberg Conference on IGCC and XtL Technologies, Freiberg.

Hansen, J.B., Rostrup-Nielsen, T. and Pålsson, J. (2007). "The use of methanated coal gas for SOFC hybrid power plants". Paper presented at 24th Annual International Pittsburgh Coal Conference, Johannesburg.

Haupt, G., Zimmermann, G., Pruschek, R. and Oeljeklaus, G. (2002). "IGCC stations as best option for CO_2 removal in fossil-fuelled power generation". Paper presented at IChemE Conference "Gasification: The Clean Choice for Carbon Management", Noordwijk.

Heaven, D. and DeSousa, B. (2004). "Technical issues with SCR in IGCC applications". Paper presented at IChemE Conference "Gasification: A Versatile Solution", Brighton.

Hebden D. *et al* (1964). *Further Experiments with a Slagging Pressure Gasifier*. Gas Council Research Communication GC112, November.

Higman, C.A.A. (1990). "Synthesis gas processes for synfuels production". Paper presented at Eurogas '90, Trondheim.

Higman, C.A.A. (1995a). "Methanol production by gasification of heavy residues". Paper presented at IChemE Conference "Gasification: An Alternative to Natural Gas", London.

Higman, C.A.A. (1995b). "Production-integrated environmental protection". In: *Ullmann's Encyclopedia of Industrial Chemistry* 5th ed., vol. B8. Weinheim: VCH Verlagsgesellschaft, 1995. pp. 287–292.

Higman, C.A.A. and Grünfelder, G. (1990). "Clean power generation from heavy residues". Paper presented at IMechE Conference "Power Generation and the Environment", London.

Hochgesand, G. (1977). Gaserzeugung. In: *Ullmanns Encyklopädie der technischen Chemie*, 4th edn, vol. A17. Weinheim: VCH Verlagsgesellschaft, p. 171.

Holt, N.A.H. (2001). "Integrated gasification combined cycle power plants". In: *Encyclopedia of Physical Science and Technology*, 3rd edn. London: Academic Press.

Hoy, H.R. *et al*. (1965). Behavior of mineral matter in slagging gasification processes. *IGE Journal*, June: 444–469.

Jones, R.M., Lacey, B.P., Yilmaz, E. Varatharajan, B., McManus, K. and Russell, S.C. (2006). "Gas turbine requirements for a carbon constrained environment". IChemE European Gasification Conference, Barcelona.

Jungfer, H. (1985). Synthesis gas from refinery residues. *Linde Reports on Science and Technology*, 40: 14–20.

Kubek, D.J., Polla, E. and Wilcher, F.P. (1996). "Purification and recovery options for gasification." Paper presented at Gasification Technologies Conference, San Francisco.

Kubek, D.J., Sharp, C.R., Kuper, D.E., Clark, M.E., DiDio, M. and Whysall, M. (2002). "Recent Selexol, PolySep and PolyBed operating experience with gasification for power and hydrogen". Paper presented at Gasification Technologies Conference, San Francisco.

Lath, E. and Herbert, P. (1986). Make CO from coke, CO_2 and O_2. *Hydrocarbon Processing*, 65(8): 55–56.

Lurgi (2001). *Company Profile*. Frankfurt: Lurgi Oel·Gas·Chemie GmbH. p. 15.

Mansfield, K. (1994). "Methanol production: experience with alternative feedstocks". Paper presented at 1994 World Methanol Conference, Geneva.

McNeely, M. (1998). Intercooling for LM6000 gas turbines. *Diesel & Gas Turbine Worldwide*, July/August.

Methanol Institute (undated). *World Methanol Supply and Demand*. Available at: www.methanol.org.

Milo, A.B. (1936). Gasturbine-Installatie met een of meer gasturbines en een of meer daardoor gedreven compressoren. Dutch Patent No. 39361.

Mulder, H. (1998). From syngas to clean fuels and chemicals via Fischer-Tropsch processes. Paper presented at IChemE Conference "Gasification: The Gateway to a Cleaner Future", Dresden.

Müller, W-D. (1989). Gas reduction. In: *Ullmanns Encyclopedia of Industrial Chemistry*, 5th edn, vol. A12. Weinheim: VCH Verlagsgesellschaft, pp. 243–249.

Mundo, K. and Weber, W. (1982). Anorganischen Stickstoffverbindungen. In: *Chemische Technologie*. Winnacker and Küchler, vol 2. München: Carl Hanser Verlag.

Nakhamkin, M. (1995). "The Cascaded-umidified Air Turbine (CHAT) and its integration with coal gasification (IGCHAT)". Paper presented at EPRI Conference on New Power Generation Technology, San Francisco.

Parkinson, G. (2001). "Krupp Uhde raises the limit on ammonia-plant capacity". *Chemical Engineering*, November: 17.

Rieger, M., Pardemann, R., Meyer, B. and Alekseev, A. (2007). "Advanced modelling of IGCC-power plant concepts: effects of ASU-integration on plant performance and gas turbine operation". Paper presented at 2nd International Freiberg Conference on IGCC and XtL Technologies, Freiberg.

Rigdon, R. and Avidon, A. (2005). "GE Energy and Bechtel's IGCC reference plant offering". Paper presented at Gasification Technologies Conference.

Schipper, D. (1993). *HAT Cycle Power Plant Study for High Efficiency*. November publication DV2-SO2.088 94.2. Sittard, The Netherlands: Novem.

Shvets, I., Tolubionski, V.I., Kirakovski, N.F., Neduzhy, I.A. and Sheludko, I.M. (1975). *Heat Engineering*. Moscow: Mir Publishers.

Société Rateau (1952). Perfectionnements aux turbo-moteurs. French patent 1007140.

Supp, E. (1990). *How to Make Methanol from Coal*. Berlin: Springer.

Tukagoshi, K., Muyama, A. and Uchida, S., Kawata, Y., Masada, J., Okada, I. and Ito, E. (2005). Latest technology for large-capacity gas turbine. Mitsubishi Heavy Industries. *Technical Review*, 42(3): 1–8.

US Department of Energy (2006). *Practical Experience Gained During the First Twenty Years of Operation of the Great Plains Gasification Plant and Implications for Future Projects*. Washington, DC: Department of Energy.

van der Burgt, M.J. and van Liere, J. (1994). "The optimal gasification combined cycle (OGCC)." Paper presented at Electric Power Research Institute (EPRI) Conference on New Power Generation Technology, San Francisco.

van der Burgt, M.J. and van Liere, J.J.C. (1996). "Applications of the Tophat cycle in power generation". Paper presented at EPRI Gasification Conference, San Francisco.

van der Burgt, M.J. and Sie, S.T. (1984). "Liquid hydrocarbons from natural gas". Paper presented at Petro-Pacific Conference, Melbourne.**

van der Burgt, M.J. *et al*. (1988). "Shell's middle distillate synthesis process". Paper presented at AIChE Spring Meeting.** **53

van der Burgt, M., Cantle, J. and Boutkan, V.K. (1992). Carbon dioxide disposal from coal-based IGCCs in depleted gas fields. *Energy Conversion Management*, 33(5–8): 603–610.

van Paassen, C.A.A. and van Liere, J.J.C. (1980). *Überblick über die Forschungsarbeit 'Einspritzkühlung' an der Technischen Universität Delft.* Essen: VGB Kraftwerkstechnik GmbH. 958–969.

VIK (2001). *VIK Statistik der Energiewirtschaft 1999/2000*. Essen: Verlag Energieberatung.**

Viswanathan, R., Purgert, R. and Rao, U. (2002). "Materials for Ultra Supercritical Coal-Fired Power Plants". Paper presented at the 19th International Pittsburgh Coal Conference.

Wolf, M., Brautsch, A., Gernert, J., Kaefer, G., Pfeffer, A. and Winkler, D. (2006). "Outlook on post-combustion CO_2 capture in ALSTOM gas turbine plants". Paper presented at PowerGen Europe, Cologne.

Yantovski, E.T. (1996). Stack downward zero-emission fuel-fired power plants concept. *Energy Conversion and Management*, 37(6–8): 867–877.

Zwiefelhofer, U. and Holtmann, H.-D. (1996). "Gas expanders in process gas purification". Paper presented at VDI-GVC Conference "Energy Recovery by Gas Expansion in Industrial Use", Magdeburg.

This page intentionally left blank

Chapter 8

Auxiliary Technologies

8.1 OXYGEN SUPPLY

The oxygen supply to a gasifier is one of the most expensive parts of any gasification project. Cost estimates for various different IGCC projects put the ASU with its associated compressors at between 10 and 15% of the total plant cost. It also makes a significant contribution to overall operating costs, the power requirement for compression being of the order of magnitude of 5–7% of gross generator output. The arrangement for oxygen supply is one of the most important early decisions in any gasification project.

This decision on oxygen supply is not only technical, but also to a high degree commercial. This is because the industrial gas market is dominated by a small number of highly competitive companies who are not only able to build oxygen plants for third parties, but are also willing to build and operate their own plants close to or even on a client's site and supply oxygen and other gases "over the fence". In some parts of the world these companies have their own extended pipeline networks, which can also be integrated into the oxygen supply strategy for a gasification project.

8.1.1 Technologies

Cryogenic processes

Since the commercialization of the Linde-Fränkle process in the 1920s, oxygen supply has been dominated by cryogenic technology.

The principle features of cryogenic air separation are shown in Figure 8.1. Air is compressed, dried in a pre-purification unit, and cooled to its liquefaction temperature. The liquid air is then distilled into its two main constituents, oxygen and

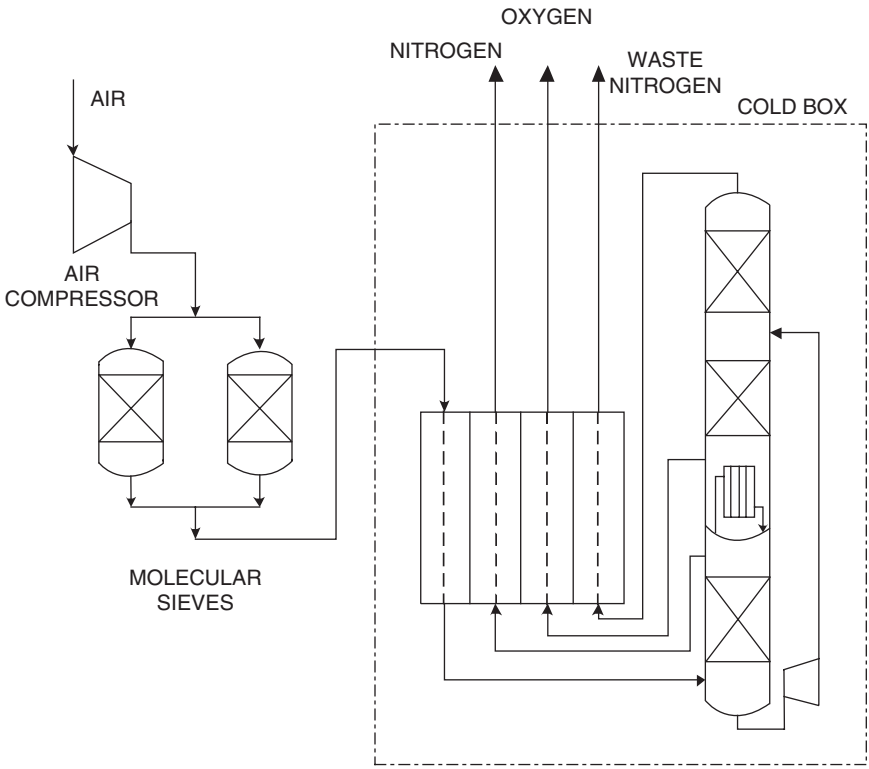

Figure 8.1 Air Separation Unit (ASU).

nitrogen. These separated products are subsequently heated and vaporized. This basic flow scheme has formed the basis for all processes, or cycles as they are known, to this day, although many improvements have been made over the years to decrease costs and improve efficiency. In addition to these improvements, the size of air separation units has risen dramatically over the last 40 years. The 1400 t/d (40 000 Nm³/h) ASU supporting a gasification plant with 65 t/h visbreaker residue feed which came on stream in 1972 was at that time the largest in the world (Butzert, 1976), but there are several plants now running with a capacity of about 90 000 Nm³/h (3200 t/d), including, for instance, that at Rozenburg, The Netherlands, which (among others) provides the oxygen for the Shell Pernis gasifiers. Early in 2008 a 3900 t/d (110 000 Nm³/h) plant will be started up in Alberta to supply the gasification plant of the Opti Canada oil sands project (Rettger *et al*., 2004).

The operating pressure of modern plants varies with the application. Low-pressure (LP) cycles, which supply by-product gaseous nitrogen at only atmospheric pressure, operate at about 5–7 bar, depending on oxygen pressure and required energy efficiency. Where much of the nitrogen is required at higher pressures, it can be advantageous to operate the ASU at elevated pressure (EP) above this level. This is

particularly appropriate in an IGCC with air and N_2 integration, since the air is in any case available from the gas turbine compressor at the higher pressure. Operating at the higher pressure also has the advantage of tending to reduce equipment size and cost.

The pre-purification unit (PPU) has seen substantial changes since the original Fränkle regenerators. After a period when most plants were equipped with reversing exchangers, in which water and CO_2 were frozen onto the surfaces of the main heat exchangers and evaporated off in the regeneration part of the cycle with waste nitrogen, the 1970s saw the introduction of molecular sieves for pre-purification. Most modern PPUs have twin beds of silica gel and molecular sieve. They hold back not only water and CO_2, but also potentially dangerous hydrocarbons that may be in the atmosphere.

The partially liquefied air enters the lower, high-pressure column where pure nitrogen is drawn off as overhead product. The bottoms, an oxygen-rich liquid, is expanded through a turbine into the upper, low-pressure column where, in the simplest cycles, pure oxygen is drawn off as bottoms product. The overhead is an impure nitrogen stream which, like the main products, is used for chilling the incoming air before being discharged to atmosphere. Where large quantities of pure nitrogen ($<$10 ppmv O_2) are required, as in ammonia plants, a reflux can be added to the top of the LP column and some of the impure nitrogen also recovered as pure product. Typically, the maximum amount of pure product obtainable is about 70% of the incoming air.

Production of argon is possible by tapping the middle of the LP column, where the argon concentration is highest, and adding a further distilling stage. Final purification of the argon takes place by the catalytic reduction of final traces of oxygen with hydrogen. This additional processing stage requires a higher operation pressure of the ASU at the upper range of LP cycles.

For the production of pressurized oxygen, two cycles are used: the compression cycle and the pumped liquid cycle. In the former, gaseous oxygen leaves the cold box at slightly above atmospheric pressure and is compressed in a compressor. Alternatively, the liquid oxygen can be pumped up to the required pressure and then vaporized under pressure. This latter cycle, also known as internal compression, when introduced required about 5–7% more energy, but cycle development has reached the point where there is little difference between compression and pumped liquid cycles.

Air separation has a widely recognized reputation for reliability. This is important for the gasification process, since oxygen production is at the beginning of the flowsheet, and loss of oxygen brings the whole downstream facility to a standstill. Traces of water or CO_2 can slip past the PPU and, over a period of time, freeze out on the heat exchangers. If this goes beyond a tolerable limit for the operation, then the cold box must be reheated to ambient temperature and de-rimed. Typically, under normal operation, this may be necessary every 2 years. The de-riming itself may take 1–2 days.

The vulnerability of a gasification plant to interruptions of oxygen supply makes the consideration of building some liquid storage capacity an important issue for the planning of any gasification project. The only economic method of oxygen storage

is as a liquid at low temperature. Typically, under such conditions a boil-off of some 0.2–0.5% per day, depending on the size of tank, must be expected. The principle aspects to be considered are the response time in which oxygen from the storage is available at the gasifier (seconds), and the size of the storage. For the latter consideration, some hours (typically about 12) worth of storage to cover a compressor trip and restart would be a minimum. A storage volume to cover a cold box de-riming period is unrealistic.

Alternative processes for small quantities

For small units, other processes are available. They cannot, however, reach the purity obtainable with a cryogenic unit. Pressure swing adsorption units are available up to a capacity of about 140 t/d (4000 Nm³/h), but can only reach a purity of about 95% O_2. The product purity obtainable with polymer membrane technology is much less – about 40% O_2 – and such units are available for capacities of 20 t/d (600 Nm³/h). The by-product capability of both these technologies is poor, but they both have the advantage of quick start-up compared with cryogenic units (Smith and Klosek, 2001). Given that most small gasification facilities are for chemical applications, where even 5% nitrogen in the oxygen is unacceptable, their use in connection with gasification is likely to be limited. The most probable gasification application could be with biomass power applications, where sizes are also at the lower end of the scale.

Future developments

Oxygen production by means of ion transport membranes is the subject of intense research and development (Allam *et al.*, 2002).

The principle of these devices is based on the use of non-porous ceramic membranes that have both electronic and oxygen ionic conductivity when operated at high temperatures, typically 800–900°C (Figure 8.2).

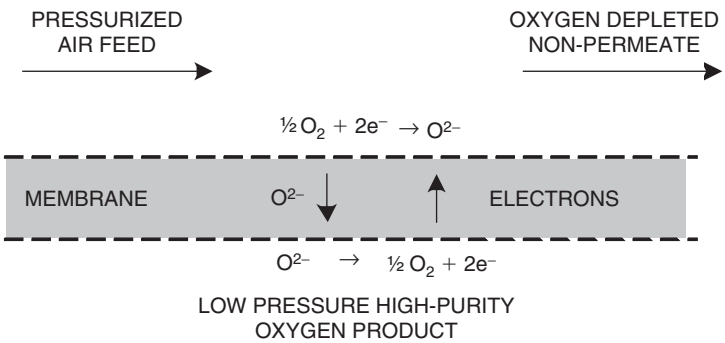

Figure 8.2 Principles of ion transport membrane (source: Allam *et al.*, 2000).

Oxygen from the feed side of the membrane adsorbs onto the surface of the membrane, where it dissociates and ionizes by electron transfer from the membrane. The oxygen diffuses through the lattice of the membrane, which is stoichiometrically deficient in oxygen. The driving force is the differential partial pressure of oxygen across the membrane. Oxygen ions arriving at the product side of the membrane release their electrons, recombining and desorbing from the surface as molecular oxygen. Electrons flow in counter-current from product to feed side of the membrane.

This ion transport mechanism is specific to oxygen so that, discounting leakage through any cracks or seals and so on, the product is 100% oxygen.

Considerable work has been performed in scale-up and demonstration of production facilities (Armstrong *et al.*, 2002). Integration with the gasification and/or the combustor of the gas turbine is mandatory for its success. The technology is highly modularized. For commercial plants, modules of 1 t/d oxygen are envisaged. A subscale engineering prototype plant capable of between 1 and 5 t/d using 0.5 t/d modules was commissioned in April 2006 (Armstrong *et al.*, 2006).

8.1.2 Pipeline and other supply possibilities

Pipelines

In areas where there is already an established pipeline network, a gas supply contract can be especially attractive. For small plants close to a pipeline this may be a very simple affair, simply drawing on existing capacity. For large plants, purpose-built capacity will have to be added, but synergies are often possible with a need for increased capacity to feed the pipeline system.

The following is a list of the major pipeline operators and the location of their networks as of 2003. A number of these have changed ownership since then.

Air Products	Houston – Port Arthur, Texas, USA Decatur, Alabama, USA Rotterdam, The Netherlands Humberside, United Kingdom Mab Ta Phut, Thailand Onsan/Ulsan, Korea
Air Liquide	Dunkirk – Antwerp – Rotterdam – Liege Corpus Christi – Lake Charles Weswego – Geismar/Baton Rouge (Louisiana – Mississippi River Corridor)
Praxair	Northwest Indiana

	Houston area
	Wilmington, California
	Detroit, Michigan (in Ecorse), and in other enclaves throughout the United States
Linde	Ruhr district, Germany
	Leuna district, Germany
Messer Griesheim	Dortmund-Cologne, Germany
	Saarland, Germany
	Tarragona, Spain

Over the fence

Even in locations where no pipelines are available, it is possible to by oxygen "over the fence". In this business model, which has a long tradition in oxygen supply to the steel industry, a gas supply company will own and operate a dedicated air separation unit within the gasification complex. By-products such as argon, which may be of little interest to the gasifier operator, can make such an arrangement very attractive. The specialist operating know-how of the gas companies enables them to achieve excellent plant availability. In some locations where this model is practiced, it has been extended to cover utility supply.

8.2 SYNTHESIS GAS TREATING

Although the number of gasification processes for any particular feedstock is limited, the range of choice for acid gas removal (AGR) processes and other gas treating tasks appears at first sight somewhat bewildering. Their selection requires a basic knowledge of the different classes of process, and a systematic approach to defining the task in hand. Although the approach developed in this chapter cannot replace the expertise of the gas purification specialist, it can help to ensure that all the facts are available in order to make an optimum selection.

Acid gas removal is a general term that is often used as a synonym for desulfurization, but, strictly speaking, in the synthesis gas environment it also includes CO_2 removal, and it is in this inclusive sense that the term is used here.

A large number of different processes have been and are used for acid gas removal, but they are all based on one of the following principles:

- Absorption (physical or chemical) in a liquid solvent with a subsequent desorption step.
- Adsorption (again physical or chemical) onto a mass of solid particles.

- Diffusion through a permeable or semi-permeable membrane.
- Chemical conversion, generally on a catalyst, often as a preparatory step to one of the above three methods.

Practically, all commercially available processes operate "cold" – that is, at ambient temperatures or lower (chemical adsorption of trace H_2S on zinc oxide is the prominent exception). The loss of efficiency in IGCC applications, which is associated with gas cooling between gasifier and gas turbine, has generated considerable interest in the possibilities of hot desulfurization processes, and these are treated separately as a topic in its own right.

8.2.1 Selection criteria

As part of the selection process it is necessary to consider the following criteria:

1. *Gas purity*. The demands on syngas purity can vary extremely with application. A chemical application such as ammonia, methanol or SNG can require desulfurization to 100 ppbv or lower. For an IGCC power application with a limit of 5 ppmv SO_2 in the flue gas, about 40 ppmv at the outlet of the AGR is satisfactory. However, desulfurization is not the only purity criterion. Ammonia syngas requires 10 ppmv max. CO_2. Other limitations may arise indirectly – for instance, in a hydrogen application any sulfur entering the PSA unit becomes concentrated in the tail gas, where emissions regulations may also create a sulfur slip limitation.
2. *Raw gas composition*. The washing solution must be able to cope with impurities in the raw gas. Most gasification processes leave about 5% of the sulfur as COS, which in many AGR processes is not absorbed as well as H_2S, if at all, so where deep sulfur removal is required it may be necessary to convert it to H_2S prior to the main sulfur removal stage. However, the raw gas composition issue is not just a matter of the previous "gas purity criterion"; the action of minor impurities on the solution itself has to be considered. For example, HCN in the raw gas reacts particularly with primary amines, causing solution degradation.
3. *Selectivity*. The selectivity of a gas separation process is the ability, for example, to remove H_2S while leaving CO_2 in the synthesis gas. There can be a number of motivations leading to a desire for high selectivity.
   - The capital and operating expense of most gas washing systems correlates well with the amount of solvent in circulation. A non-selective wash that also washes out large quantities of CO_2 may (in the case of a chemical wash, will) inflate the solution rate, and therefore costs, considerably. A good selectivity can therefore make a contribution to good economics.
   - The acid gas removed from the syngas is usually processed in a Claus sulfur recovery unit (SRU). It is important for the Claus process that the H_2S stream to the SRU not be too dilute. For a typical air-blown SRU, the lower limit for practical operation is about 30 mol%. In the context of gasification, it is

usually possible to operate the SRU in an oxygen-blown mode, since the SRU oxygen requirement is generally small compared to that necessary for the gasifier. An oxygen-blown SRU can operate with as little as 10 mol% H_2S in the sour gas, though this must be considered an extreme figure. Either way, excess CO_2 in the sour gas will inflate the cost of the SRU. When looking at the selectivity of an AGR system, it is therefore necessary to consider the effect on the SRU.

- For an IGCC application, CO_2 in the synthesis gas contributes to the total mass flow through the gas turbine and so to the power output. It is therefore, in principle, desirable to leave any CO_2 in the synthesis gas rather than washing it out (except, of course, in the carbon capture configuration). For many gasification processes with a low content of CO_2 (<5%) in the raw syngas this is not usually decisive, but with higher CO_2 content it can be important.

4. *Other issues* that need to be reviewed as part of the selection process are *corrosion* (often the practical limit on higher solvent loading), co-absorption of the useful gas components (in syngas applications hydrogen and carbon monoxide, but in general this would include hydrocarbons), solvent losses through degradation or vapor pressure, opportunity for waste heat integration, particularly for the solvent regeneration in chemical washes, and availability of the solvent and its toxicity.
5. *Economic boundary conditions*. In particular, the depreciation rate or pay-out time specified for a project may influence the process selection. Typically, chemical washes will tend to require less capital investment than a physical wash, but at the expense of a higher utility demand for solvent regeneration.

Examination of the above criteria in any particular case will probably narrow the field down to maybe three or four serious contenders – sometimes even less. The chart in Figure 8.3 provides assistance in this. Selection from this shortlist is then generally a matter of pure economics.

8.2.2 Absorption systems

Absorption processes are characterized by washing the synthesis gas with a liquid solvent, which selectively removes the acid components (mainly H_2S and CO_2) from the gas. The laden solvent is regenerated, releasing the acid components, and recirculated to the absorber. The washing or absorption process takes place in a column, which is usually fitted with (structured or unstructured) packing or trays.

The absorption characteristics of a solvent depend either on simple physical absorption or on a chemical bond with the solvent itself. This provides the basis for the classification of AGR systems into physical or chemical washes, which have distinctly different loading characteristics.

The loading capacity of a physical wash depends primarily on Henry's law, and is therefore practically proportional to the partial pressure of the component to be

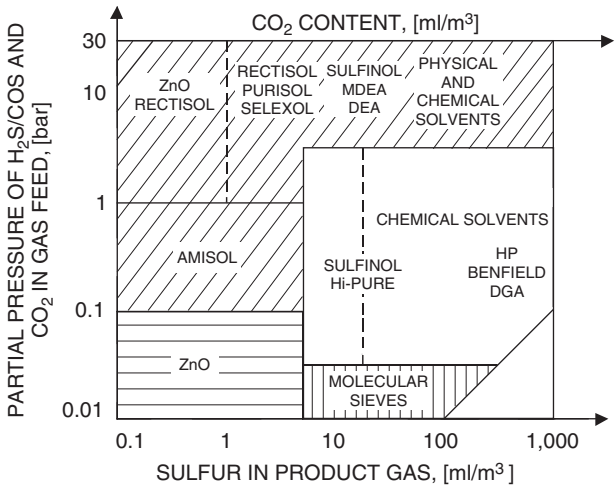

Figure 8.3 Initial selection of AGR processes (reproduced with from permission Lurgi).

removed (Figure 8.4). This leads to the fact that the solution rate for any particular operating pressure is approximately proportional to the volume of raw gas to be processed.

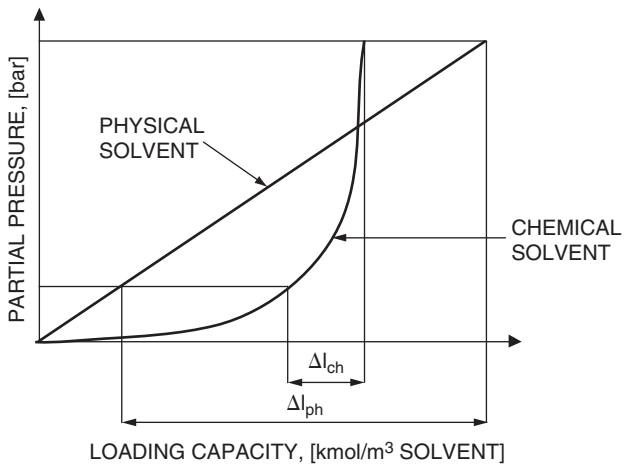

Figure 8.4 Equilibrium of physical and chemical absorption.

In contrast, the loading capacity of a chemical wash is limited by the quantity of the active component of the solution. Once a saturation level is reached, only a minor additional loading can be achieved by physical absorption in the solution. The solution rate is approximately proportional to the volume of acid gas removed.

Some mixed solvents have been developed using both effects. These are known as physical–chemical washes.

Generally, solvent regeneration is achieved by one or a combination of flashing, stripping and reboiling. Both flashing and stripping reduce the partial pressure of the acid component. In physical washes, reboiling raises the temperature and reduces the acid gas solubility. In chemical washes, the increased temperature serves to break the chemical bond. In such systems, the acid components are released in the same chemical form in which they were absorbed (Figure 8.5).

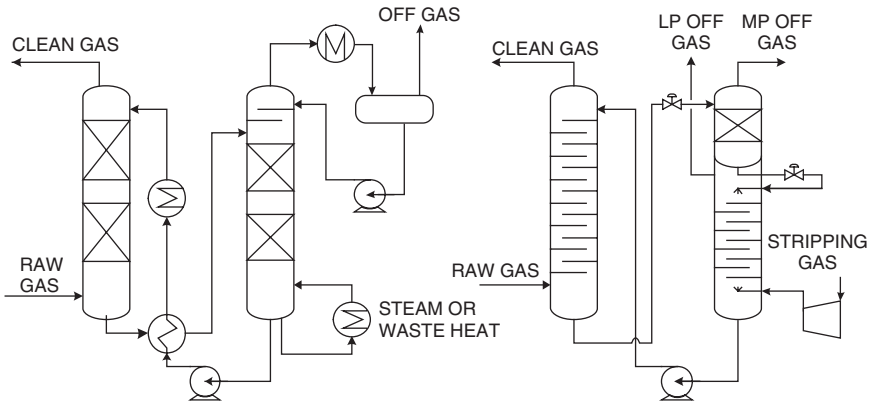

Figure 8.5 Regeneration by reboiling (left) and flashing and stripping (right).

An additional class of washing systems, oxidative washes, regenerate the chemically absorbed sulfur by oxidizing the active component in the solvent and recovering the sulfur in elemental form.

Chemical washes

There are two groups of chemicals that have been applied to acid gas removal; amines, of which there are many individual types, and potassium carbonate.

Amines. Solutions of amines in water have been used for acid gas removal for over 50 years. The principle amines used for synthesis gas treatment are mono- and diethanolamine (MEA and DEA), methyldiethanolamine (MDEA), and di-isopropanolamine (DIPA), the latter particularly as a component of the Sulfinol solvent. Other amines used in natural gas applications, such as diglycolamine (DGA) or triethanolamine (TEA), have not been able to make any significant impact in syngas applications.

MDEA is the most widely used amine today. It is more selective than primary (e.g. MEA) or secondary (e.g. DEA) amines, due to the fact that CO_2 is absorbed more slowly than H_2S.

A number of proprietary formulations have been developed to address specific issues – for example, Ucarsol was developed to reduce corrosion with high CO_2 loading, and BASF's aMDEA includes an activator to accelerate CO_2 absorption, where selectivity is not a requirement. Variation in the degree of promotion can influence the energy requirement for regeneration. Exxon developed the Flexsorb family of hindered amines specifically for high selectivity.

Typical performance data of different amine washes may be seen in Table 8.1. The flowsheet of a typical MDEA wash is shown in Figure 8.6.

Table 8.1
Properties of amine solvents

		Standard MEA	Inhibited MEA	DEA	MDEA
Molecular weight		61		105	119
CO_2 partial pressure	bar	<100	<100		
Gas purity CO_2	ppm	20–50	20–50		
Solution strength	wt%	10–20	30	25–35	30–50
Solution loading	mol/mol	0.25–0.45		0.4–0.8	0.8
Energy demand	MJ/kmol CO_2	210	140		
Notes					selective

Potassium carbonate washes. Hot potassium carbonate (or hot potash) washes use an aqueous solution of potassium carbonate. Absorption can take place at close to 100°C. The first IGCC unit in Lünen used a hot potash wash, but generally they have not found much favor in the gasification environment, mainly because of the limited sulfur purity achievable. Modified hot carbonate washes such as Vetrocoke and particularly Benfield, which use additives to inhibit corrosion, have been very successful in pure CO_2 removal applications downstream of steam reformers. However, these processes have generally been less competitive versus activated amines in recent years.

Physical washes. The important characteristics for any successful physical solvent are:

- Good solubility for CO_2, H_2S and COS in the operating range, preferably with significantly better absorption for H_2S and COS compared with CO_2 if selectivity is an important issue for the application in hand.

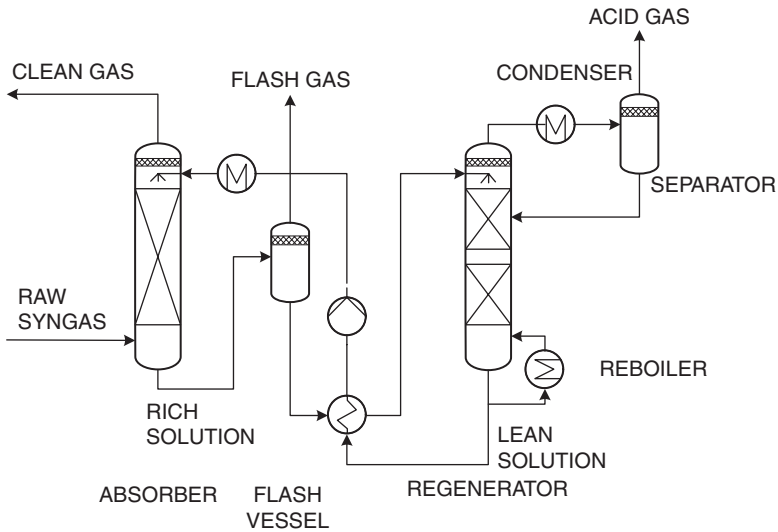

Figure 8.6 Typical MDEA flowsheet with single flash stage.

- Low viscosity at the lower end of the operating temperature range. Although lowering the operating temperature increases the solubility, the viscosity governs in effect the practical limit to lowering the operating temperature.
- A high boiling point reduces vapor losses when operating at ambient or near ambient temperatures.

Table 8.2 gives the properties of various physical solvents.

Rectisol. The Rectisol process, which uses cold methanol as solvent, was originally developed to provide a treatment for gas from the Lurgi moving-bed gasifier, which, in addition to H_2S and CO_2, contains hydrocarbons, ammonia, hydrogen cyanide and other impurities.

In the typical operating range of −30 to −60°C the Henry's law absorption coefficients of methanol are extremely high, and the process can achieve gas purities unmatched by other processes. This has made it a standard solution in chemical applications such as ammonia, methanol or methanation, where the synthesis catalysts require sulfur removal to less than 0.1 ppmv. This performance has a price, however, in that the refrigeration duty required for operation at these temperatures involves considerable capital and operating expense.

Methanol as a solvent exhibits considerable selectivity, as can be seen in Table 8.2. This allows substantial flexibility in the flowsheeting of the Rectisol process, and both standard (non-selective) and selective variants of the process are regularly applied according to circumstances.

Table 8.2
Properties of physical solvents

		Methanol	NMP	DMPEG
Formula		CH_3OH	$CH_3N-(H_2C)_3$ C=O	$CH_3O(C_2H_4O)_x$ CH_3
Mol. weight	kg/kmol	32	99	178−442
Boiling point at 760 Torr	°C	64	202	213−467
Melting point	°C	−94	−24.4	−20 to −29
Viscosity	cP	0.85 at −15°C 1.4 at −30°C 2.4 at −50°C	1.65 at 30°C 1.75 at 25°C 2.0 at 15°C	4.7 at 30°C 5.8 at 25°C 8.3 at 15°C
Specific mass	kg/m³	790	1.027	1.031
Heat of evaporation	kJ/m³	1090	533	
Specific heat at 25°C	kJ/kg.K	0.6	0.52	0.49
Selectivity at working temperature	$H_2S:CO_2$	1:9.5	1:13	1:9

As a physical wash, which uses at least in part flash regeneration, part of the CO_2 can be recovered under an intermediate pressure. Typically, with a raw gas pressure of 50 bar, about 60–75% of the CO_2 would be recoverable at 4–5 bar. Where CO_2 recovery is desired, whether for urea production in an ammonia application or for sequestration, this can provide significant compression savings.

Figure 8.7 shows the selective Rectisol variant as applied to methanol production. The incoming raw gas is cooled down to about −30°C, the operating temperature of the H_2S absorber. Both H_2S and COS are washed out with the cold methanol to a residual total sulfur content of less than 100 ppbv. The desulfurized gas is then shifted outside the Rectisol unit, the degree of shift being dependent on the final product. Carbon dioxide is then removed from the shifted gas in the CO_2 absorber to produce a raw hydrogen product. This column is divided into two sections; a bulk CO_2 removal section using flash regenerated methanol, and a fine CO_2 removal section in which hot regenerated methanol is used. The CO_2 removal section operates at lower temperatures, typically about −60°C. The permissible CO_2 slip is dependent on the application. For methanol synthesis gas, 1 mol% residual CO_2 is quite adequate. For hydrogen production based on methanation, typically 100 ppmv would be appropriate. For ammonia, where the gas is subsequently treated in a cryogenic nitrogen wash, 10 ppm would be typical.

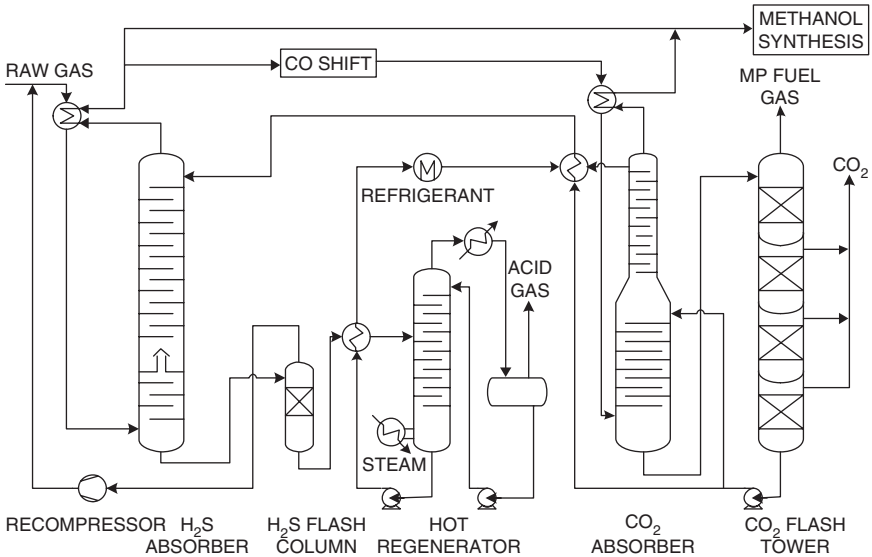

Figure 8.7 Flowsheet of selective Rectisol process (source: Weiss, 1997).

Following the solvent circuit, we see first an intermediate H_2S flash from which co-absorbed hydrogen and carbon monoxide are recovered and recompressed back into the raw gas. The flashed methanol is then reheated before entering the hot regenerator. Here, the acid gas is driven out of the methanol by reboiling and a Claus gas with an H_2S content of 25–30% (depending on the sulfur content of the feedstock) is recovered. Minor adaptations are possible to increase the H_2S content if desired.

The hot regenerated methanol, which is the purest methanol in the circuit, is used for the fine CO_2 removal. The methanol from the CO_2 removal is subjected to flash regeneration in a multi-stage flash tower. The configuration shown is typical for the methanol application with only atmospheric flash regeneration. For the hydrogen or ammonia applications where better absorption is required, the final flash stage may be under vacuum or it may use stripping nitrogen from the air separation plant. Finally, the loop is closed with the flash regenerated methanol returning to the H_2S absorber.

Water entering the Rectisol unit with the syngas must be removed, and an additional small water–methanol distillation column is included in the process to cope with this.

Typically, the refrigerant is supplied at between −30 and −40°C. The lower levels used in the CO_2 wash are achieved with the flash regeneration. Depending on application, different refrigerants can be used. In an ammonia plant, naturally, ammonia is used, and the refrigeration system is integrated with that of the synthesis. In a refinery environment, propane or propylene may be the refrigerant of choice.

The Rectisol technology is capable of removing not only conventional acid gas components but also, for example, HCN and hydrocarbons. Supp (1990: 83)

describes a typical hydrocarbon prewash system. Mercury capture using Rectisol as a cold trap to condense out metallic mercury is also documented (Koss *et al.*, 2002).

Selexol. The Selexol process was originally developed by Allied Chemical Corporation, and is now owned by UOP. It uses dimethyl ethers of polyethylene glycol (DMPEG). The typical operating temperature range is 0–40°C. The ability to operate in this temperature range offers substantially reduced costs by eliminating or minimizing refrigeration duty. On the other hand, for a chemical application such as ammonia, the residual sulfur in the treated gas may be 1 ppmv of H_2S and of COS (Kubek *et al.*, 2002), which is still more than the synthesis catalysts can tolerate. This is not an issue, however, in power applications where the sulfur slip is less critical. Selexol has a number of references for such plants, including the original Cool Water demonstration unit and, most recently, the 550 MW Sarlux IGCC facility in Italy.

The ratio of absorption coefficients for H_2S, COS and CO_2 is about 1:4:9 in descending order of solubility (Kubek *et al.*, 1997). A plant designed for, say, 1 ppm COS in the clean gas would require about four times the circulation rate of a plant for 1 ppm H_2S, together with all the associated capital and operating costs. In a gasification environment it is therefore preferable to convert as much COS to H_2S upstream of a Selexol wash as possible. In a plant using raw gas shift for hydrogen or ammonia, this will take place simultaneously on the catalyst with the carbon monoxide shift. Where no CO shift is desired, then COS hydrolysis upstream of the Selexol unit provides a cost-effective solution to the COS issue.

Other characteristics favorable for gasification applications include high solubilities for HCN and NH_3, as well as for nickel and iron carbonyls.

The Selexol flowsheet in Figure 8.8 exhibits the typical characteristics of most physical absorption systems. The intermediate flash allows co-absorbed syngas components (H_2 and CO) to be recovered and recompressed back into the main stream. For other applications, including H_2S concentration in the acid gas or separate CO_2 recovery, staged flashing and stripping techniques not shown here may be applied.

Purisol. NMP or n-methyl-pyrrolidone is the solvent used in Lurgi's Purisol process. The operating range is 15–40°C. The selectivity for H_2S/CO_2 is extremely high and largely independent of the operating temperature (Grünewald, 1989). Solvent properties are included in Table 8.2. The characteristics are in many ways comparable with Selexol.

Physical–chemical washes

Some gas washing systems exploit the principles of both physical and chemical washing, and are known as physical–chemical washes. They generally use an amine together with an organic physical solvent. They can usually accept a higher loading than an aqueous amine solution, thus reducing solvent rates. Furthermore,

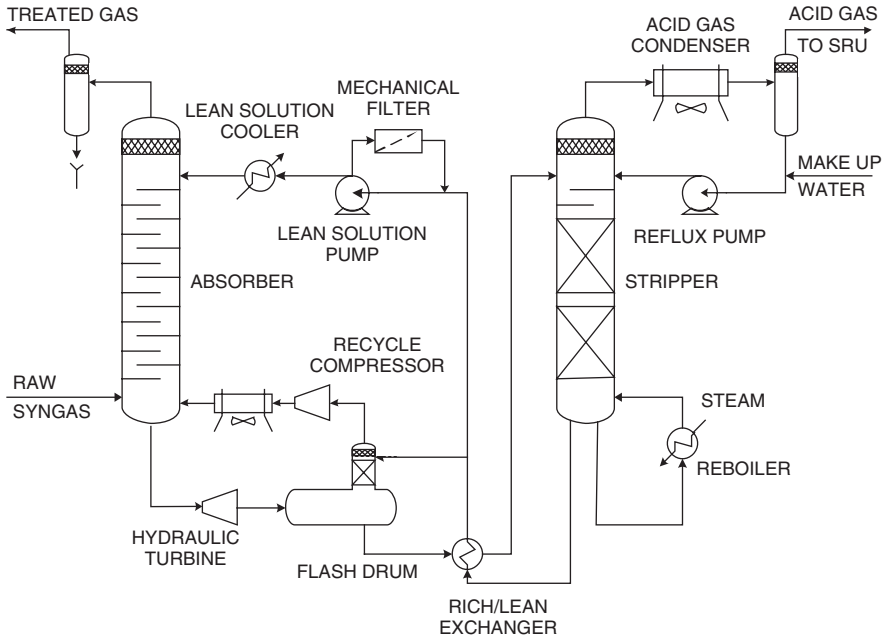

Figure 8.8 Selexol flowsheet for selective H_2S removal (source: Kubek *et al.*, 1997).

the organic solvents applied in such systems accelerate the hydrolysis of COS to H_2S in the lower sections of the column, thus permitting an improved total sulfur removal performance compared with a pure amine system. Other aspects that still need review when considering a physical–chemical system include the potential for amine degradation, which is generally unchanged compared with the equivalent aqueous amine system. The effectiveness of such mixed solutions for absorption of metal carbonyls is not documented, and so must be considered as unproven.

Sulfinol. Shell's Sulfinol solvent in its original form was a mixture of DIPA and Sulfolane (tetrahydrothiophene dioxide), the former being a chemical solvent and the latter a physical solvent. Meanwhile a modified solvent, known as m-Sulfinol, has been developed which uses MDEA as the chemical component. The original Sulfinol formulation has been used successfully downstream of a large number of small oil gasifiers for the production of oxo-synthesis gas. The AGR at the Buggenum IGCC is an example of a larger m-Sulfinol unit.

Amisol. The Amisol process was developed by Lurgi using a mixture of MEA or DEA methanol. It has been applied downstream of a number of oil gasification units, but has not established a wide market. Details can be found in Kriebel (1989) and Supp (1990).

Oxidative washes

Oxidative washes or liquid redox systems differ from other types of absorption systems in that the H_2S in the acid gas is oxidized directly to elemental sulfur in the absorption stage. The active agent in the solution is regenerated in a separate oxidizing vessel, which also serves to separate the solid elemental sulfur from the solution. The solvents of oxidative washes absorb essentially only H_2S, but not CO_2 or COS. This makes them suitable for applications where H_2S must be removed from a stream containing large quantities of CO_2, even if the H_2S partial pressure is low.

There is no known existing application operating in a gasification environment, but such washes exhibit potential as a substitute for a Claus plant, where the gasifier feed has very low sulfur content and the sour gas is unsuitable for treatment in a Claus plant.

Earlier plants, notably the Stretford and Takahax processes, used vanadium-based agents, which undergo a valence change from the pentavalent to the tetravalent state during the absorption stage. Modern processes, of which Lo-Cat and Sulferox are the best known, use chelated iron formulations.

The Lo-Cat process can be arranged in a number of different application-dependent configurations, of which that shown in Figure 8.9 is typical. Acid gas enters the absorber, where the H_2S is absorbed into the aqueous chelated iron solution. The ferric iron oxidizes the HS^- ion to elemental sulfur according to reaction 8.1. The iron is reduced to the ferrous state.

$$HS^- + 2Fe^{+3} \rightarrow S^0 + 2Fe^{+2} + H^+ \tag{8.1}$$

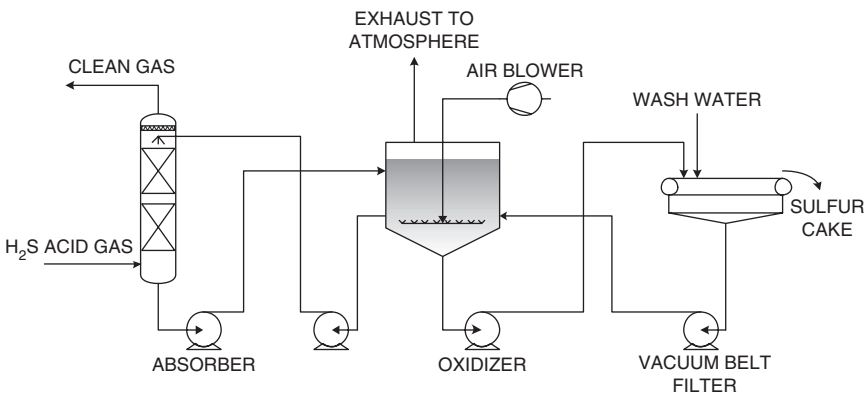

Figure 8.9 Lo-Cat flowsheet (adapted from Nagl, 2001).

In the oxidizer, the sulfur settles out and is transferred to a vacuum filter, where it is separated from the solution as a cake. Air is blown into the oxidizer, where oxygen is absorbed into the solution and oxidizes the ferrous iron back to the ferric state (reaction 8.2) for recirculation back to the absorber.

$$2Fe^{+2} + ½O_2(l) + H_2O \rightarrow 2Fe^{+3} + 2\ OH^- \tag{8.2}$$

The raw sulfur from the vacuum filter is typically 65–85% sulfur, the remainder being water and dissolved salts, including iron. This product requires further treatment to meet generally accepted market quality, melting (to remove the water) and filtering being important process steps. Nonetheless, the usual "bright yellow" color specification for commodity sulfur is not met, and specialized applications need to be located in the marketplace.

As mentioned above, liquid redox systems are generally applied for small plants, in particular where H_2S concentrations are lower than can be handled by the Claus process (see section 8.4). The Stretford process was regularly applied for Claus tail gas processing as part of the Beavon tail gas treating process. A similar application using an iron chelate process was put into service in 2001 (Nagl, 2001).

8.2.3 Adsorption systems

A second important group of gas treatment processes is based on the adsorption of impurities onto a solid carrier bed. Some of these processes, such as molecular sieve driers or pressure swing adsorption, allow *in situ* regeneration of the bed. Others, such as H_2S chemisorption onto zinc oxide, cannot be regenerated economically *in situ*, and the beds require regular exchange.

The quantity of a gaseous component that can be carried by any particular adsorbent depends not only on the characteristics of component and sorbent, but also on the temperature and pressure under which it takes place. This increase in loading capacity with higher pressures and lower temperatures is illustrated in Figure 8.10, and is utilized for the *in situ* regeneration of such sorbents as activated carbon, activated alumina, silica gel and molecular sieves.

The classic adsorption–desorption cycle uses both the temperature and pressure effects, "swinging" between high pressure and low temperature for adsorption (point 1 in Figure 8.10) and low pressure and high temperature (point 2) for desorption. The differential loading ($L_1 - L_2$) is extremely high. The pressure swing cycle operates at constant temperature T_0 between points 3 and 4. A temperature swing process operating at constant pressure between points 1 and 5 is possible, but unusual in practice.

Molecular sieves

The most common application of molecular sieves in connection with gasification plants is the removal of water and CO_2 upstream of cryogenic units. Processes working at cryogenic temperatures, such as air separation or cryogenic gas separation, require a feed gas completely free of these components, which would otherwise freeze and deposit on the inlet heat exchangers, eventually blocking them.

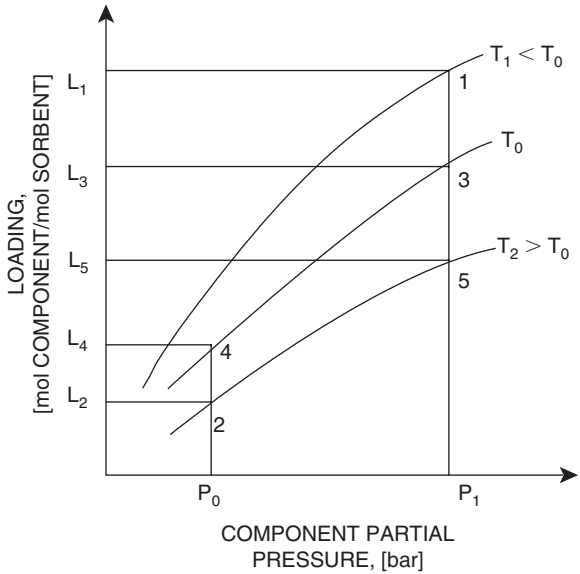

Figure 8.10 Adsorption loading at different temperatures and pressures.

The classic cycle described above is usually employed. Sorbent material is chosen according to application. In air separation duty, water and CO_2 are not the only considerations. The pre-purification unit also prevents the ingress of hydrocarbons into the cold box as a safety measure. Recently, the ingress of NO_x into the cold box has also become an issue of concern. For air separation, often a combination of molecular sieve and silica gel is used.

Pressure swing adsorption

Pressure swing adsorption (PSA) operates on an isothermal cycle, adsorbing at high pressure and desorbing at low pressure. The principle application of PSA is for hydrogen purification, although there are a number of others, including air separation (see section 8.1).

The optimum pressure for hydrogen purification lies in the range 15–30 bar. At higher pressures the hydrogen yield falls off – a point to be considered when integrating a hydrogen off-take from a gasification plant optimized for a different application.

The hydrogen yield of a modern PSA unit usually lies between 80% and 92%. Apart from the matter of pressure mentioned above, other influences are the quality of the feed gas (the higher the quantity of impurities to be removed, the more hydrogen is lost with them) and the tail gas pressure. Where the tail gas is burned in dedicated burners, as for instance in a steam reformer hydrogen plant, the typical

tail gas pressure is 0.3–0.4 bar gauge. Where the tail gas pressure is higher (e.g. 3–5 bar gauge), the drop in hydrogen yield can become very significant.

Additionally, the hydrogen purity can affect the yield, though only to a small degree. Typical purities range from 99 to 99.999 mol%. An additional common hydrogen specification is a limit on the amounts of carbon oxides (CO and CO_2). Levels of 0.1 to 10 ppmv are easily achieved. In the design of an overall gasification to hydrogen system, it is useful to have an idea about the performance of likely impurities in the PSA unit. A comparison of a number of components is shown in Table 8.3. In this connection, it is important to note that water is strongly adsorbed and so will not contaminate the product. It is disadvantageous to have large quantities in the feed gas, since this requires excessively large beds. Usually, cooling to below 40°C with subsequent condensate separation is sufficient to provide an economic design.

Table 8.3
Relative strength of adsorption of typical impurities

Non-adsorbed	Light	Intermediate	Heavy
H_2	O_2	CO	C_3H_6
He	N_2	CH_4	C_4H_{10}
	Ar	C_2H_6	C_5+
		CO_2	H_2S
		C_3H_8	NH_3
			H_2O

Source: Miller and Stoecker, 1989.

A further design consideration is the number of adsorber vessels. Early plants used four beds, as is still the practice in smaller plants. Larger modern plants use as many as 12 adsorbers. Sophisticated cycles have been developed to minimize the loss of hydrogen on depressurization from the adsorption step to the desorption step by using this hydrogen to repressurize a bed which has just completed its desorption step. Thus there can be a trade-off between a higher investment for an increased number of vessels (and valves) and operating savings from an increased hydrogen yield.

Zinc oxide/copper oxide

Adsorption of H_2S onto zinc oxide is an effective method for removing trace quantities of sulfur from gas to achieve a purity of less than 0.1 ppm, as is required by copper or nickel catalysts. It is therefore the standard method of desulfurization upstream of natural gas steam reformers. The adsorption takes place via the reaction of hydrogen sulfide with zinc oxide to form zinc sulfide. *In situ* regeneration

is not possible, and this places a limitation on the amount of sulfur that the process can accept in the inlet gas.

There are two generally accepted designs for zinc oxide desulfurization units. In a guard bed function or where the sulfur load is low, a single bed is provided, sized to adsorb the total quantity of sulfur to be expected between planned turnarounds – say 1 or 2 years. Where the sulfur load is higher and a single bed would become unmanageably large, a two-vessel series arrangement is provided and provision is made for exchanging the adsorbent on line. With this arrangement, the individual bed can be sized smaller for, typically, a 6 month interval between bed replacement.

Zinc oxide can adsorb sulfur present as H_2S almost completely. Performance with other sulfur compounds (COS, mercaptans) is not as good. In cases where sulfur is present other than as H_2S, it is necessary to hydrogenate these components to H_2S upstream of the zinc-oxide bed. This is normally done over a cobalt–molybdenum (CoMox) or nickel–molybdenum (NiMox) catalyst.

Zinc oxide adsorption is essentially a process for polishing or guard bed duty. This becomes clear when considering a zinc oxide bed for the carbon monoxide plant described in section 7.1.4. Operating in its optimum temperature range of 350–400°C, zinc oxide has a pick-up capacity of around 20% by weight. Assuming a sulfur content of 100 ppmv in the natural gas, the total sulfur intake is about 10 tonnes/year, requiring replacement of about 50 t/y zinc oxide. Compare this with the nearly 30 t/d sulfur intake of the 1000 t/d methanol plant of section 7.1.2, and the limitations become very apparent.

Given these numbers, zinc oxide in the gasification environment is limited either to guard bed duty, for example upstream of a low temperature shift or methanator catalyst, or to natural gas feeds. As discussed in section 7.1.4, there are arguments for desulfurizing either upstream or downstream of the partial oxidation reactor.

Where extreme sulfur cleanliness is required, copper oxide can be used for final desulfurization down to 10 ppb. Commercial adsorbents are available for this purpose, either in a mixed ZnO/CuO formulation or as a separate polishing bed.

8.2.4 Membrane systems

Permeable gas separation membranes in syngas service utilize differences in solubility and diffusion of different gases in polymer membranes. The rate of transport of a component through the membrane is approximately proportional to the difference in partial pressure of the component on the two sides of the membrane. Polymer membranes have found increasing use in a number of applications, including natural gas processing (CO_2 removal), and in the synthesis gas environment for hydrogen separation out of the main syngas stream.

The design of a polymer membrane system exploits the different permeability rates of the components in the feed gas. An idea of the relative rates through a typical hydrogen separation polymer can be gained from Table 8.4. Thus a good separation

Table 8.4
Relative permeability rates of typical syngas components

Quick	Intermediate	Slow
H_2	CO_2	CO
He		CH_4
H_2S		N_2

Source: Kubek *et al*., 1997.

can be achieved between, for example, hydrogen and CO or N_2. Separation from CO_2 will be only moderately satisfactory, however.

Membrane units are usually supplied packaged, typically as a bundle of hollow tube fibers. The feed is supplied to the shell side of the bundle and the permeate (hydrogen-rich stream), which passes through the fiber tube walls, is collected on the tube side. Design variables are the pressure difference selected and the total surface area of the polymer.

For the system designer, the integration of a membrane unit has two important characteristics. First, permeable membranes provide the only system leaving the carbon monoxide at essentially the same pressure level as at the gas inlet (less hydraulic losses only) and the hydrogen on the low-pressure side. This is exactly the reverse of the pressure swing adsorber. Secondly, as mentioned above, it must be recognized that since all permeable membranes work on the basis of different rates of diffusion, they can only have a limited selectivity. This can be disadvantageous, since in a hydrogen extraction application the product hydrogen is not very pure, and the diffusion of CO through the membrane can be considered as a loss of high-pressure gas.

Nonetheless, skilled integration of membrane and PSA technologies can together provide some extremely attractive solutions. Consider the following situation where 20 000 Nm^3/h pure hydrogen is required from a main stream of syngas in an IGCC (Figure 8.11 and Table 8.5). The membrane is used to produce a raw hydrogen at reduced pressure (but still adequate for PSA feed) with only small loss of other syngas components for the gas turbine. The raw hydrogen has a purity of about 70–90 mol%, depending on syngas composition and pressure, which allows the PSA to have a significantly higher efficiency than would be the case with syngas feed. Furthermore, the much smaller quantity of tail gas to be adsorbed allows the PSA unit to be smaller too.

Care should be exercised with liquid carry-over from an upstream AGR system; in some cases, these can damage the membrane. Proper separation at the AGR outlet should, however, be sufficient to prevent problems (Collodi, 2001).

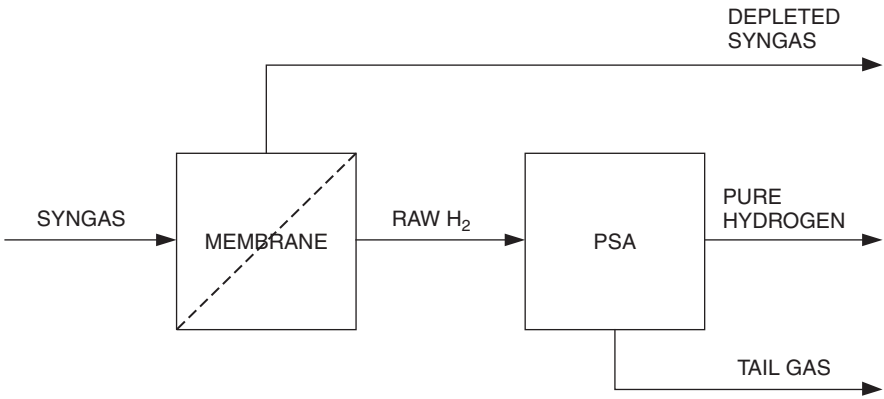

Figure 8.11 Membrane and PSA combination.

Table 8.5
Mass balance for membrane/PSA combination

		Syngas in (mol%)	Syngas out (mol%)	Raw H_2 (mol%)	Pure H_2 (mol%)	Tail gas (mol%)
CO_2		8.6	8.4	9.4		31.4
CO		43.8	52.4	7.9		26.3
H_2		45.3	36.5	82.4	100.0	41.2
CH_4		2.3	2.7	0.3		1.1
Total	kmol/h	6635	6499	1275	893	382
Pressure	bar	50	49	25	24	1.3

8.2.5 Hot gas clean-up

For power applications, the energy loss involved in cooling synthesis gas down to ambient or lower temperatures, as required by current acid gas removal systems, is reason enough for the interest in so called "hot gas clean-up". Actually, hot gas clean-up is anyway a misnomer, and these technological developments should rightly be called "warm gas clean-up", since the target operating temperature range is between 250 and 500°C.

Impurities that need to be considered in a warm gas clean-up system include particulates (fly ash and char), as well as gaseous compounds such as H_2S, COS, NH_3, HCN, HCl and alkali species. At temperatures above about 500°C alkaline species

will pass through a particulate filter, and this, together with materials issues, is the principle reason why no attempts at hotter clean-up have been made.

Technologies for warm gas clean-up using zinc-based sorbents have been built at demonstration scale in Polk County and Piñon Pine, without great success (Simbeck, 2002; US Department of Energy, 2002). In fact, neither of these units was ever operated. Both of them were designed essentially as desulfurization units with removal efficiencies of up to 98%, which at the time of design conformed to existing power station emission regulations. They did not address some of the other species, such as nitrogen compounds and halides, nor for that matter mercury. Furthermore, the sulfur removal efficiencies made them unsuitable for most chemical applications.

Nonetheless, the potential in terms of efficiency improvement remains and continues to provide an incentive for research and development to find appropriate systems.

Further developments

One current program by RTI is addressing some of these issues. It addresses different contaminants such as sulfur, mercury, arsenic, selenium, hydrogen chloride, ammonia and hydrogen cyanide as well as CO_2 with dedicated modules, mostly working on the basis of adsorbents, all operating a temperatures of 250°C or higher. The adsorbents for mercury, arsenic and selenium use disposable adsorbents, whereas the others are regenerable. The desulfurization module uses a zinc oxide-based adsorbent in a transport reactor with continuous regeneration. The regeneration step oxidizes the sulfur to SO_2, which can be recovered as elemental sulfur in a direct sulfur recovery unit (Turk and Schlather, 2007). Trials of the desulfurization module together with the sulfur recovery unit in a small slipstream unit in the Eastman plant in Kingsport are being conducted and proving encouraging. After over 3000 hours operation, residual total sulfur levels of between 5 and 12 ppmv have been demonstrated (Schlather and Turk, 2007).

One limitation to achieving the efficiency gains promised by hot gas clean-up is that current mercury removal technology operates at ambient temperatures. Some work has been performed on a palladium-based sorbent at about 260°C (US Department of Energy, 2007).

A proposed alternative to fluid-bed technology is to use chemisorption on tin oxide/zinc oxide in a fixed bed. Haldor Topsoe has tested this at pilot-plant scale, using steam to regenerate the bed over 130 absorption/regeneration cycles (Højlund Nielsen and Sigurdardottir, 1995).

8.2.6 Biomass syngas treating

Treating the syngas generated from biomass has special problems – particularly those associated with the presence of tars in the gas. Köppel and colleagues (2004; 2006) have presented reviews of the various technologies employed to address this issue. Essentially there have been two different approaches; tar cracking and washing with an organic solvent.

Tar cracking

Tar cracking takes place over a catalyst. The variety of catalysts used includes noble metals (mostly platinum and rhodium), nickel (see, for example, Corella *et al.*, 2004), and various "natural catalysts" such as dolomite (see, for example, Morris and Waldheim, 2002), magnesite, calcite and olivine rock, but also charcoal (e.g. Bajohr *et al.*, 2002). The temperatures at which these catalysts are effective are generally fairly high – over 900°C for rhodium and between 750°C and 900°C for nickel, depending on the nickel content of the catalyst. Temperatures for the natural rocks are at the higher end of this range, whereas charcoal is effective at about 750°C.

An interesting development currently being pursued by Pall Schumacher is to combine the two tasks of tar cracking and solids filtration into a single process stage by impregnating a ceramic filter candle with catalyst. Considerable success under the conditions proposed has been achieved, but there is a fundamental limitation to the approach in that, at the temperatures required by the catalysts, alkali metal compounds are mostly still volatile. A second, lower-temperature solids removal step will therefore still be required after these compounds have condensed.

Oil washing

The alternative approach of using an oil wash has been applied successfully in connection with the FICFB process in Güssing (see p. 169; also Hofbauer, 2002). Another process now commercially available is the OLGA process described below. To date, oil washing technologies have targeted gas qualities suitable for power applications. Additional work is required to achieve a chemicals application quality.

OLGA. The OLGA gas washing system was developed by ECN and Dahlman in The Netherlands as a means of eliminating tars in biomass gas (Bergmann *et al.*, 2002; Boerrigter *et al.*, 2005). A 0.5 MW_{th} pilot plant was built in 2002 and operated successfully downstream of a CFB gasifier, continuously supplying a gas motor for over 650 hours. Test results have shown 100% phenol and >99% naphthalene removal. The tar dewpoint was below 10°C. Test runs were conducted on a 4 MW_{th} (1.1 MW_e) commercial demonstration plant downstream of a fixed-bed updraft wood gasifier at Moissannes, France, in 2006. Wood (dust and chips from saw mills) and grape pulp (residue from wine production) are the primary feedstocks. Plans for a 12 MW_e unit are under consideration (Könemann and van Paasen, 2007).

The process is shown in Figure 8.12. Gas enters the OLGA plant at a temperature of typically 350°C, but in any case above the tar dewpoint of the gas, to avoid condensation problems in the upstream piping. An inlet cyclone serves to remove any coarse particles entrained in the gas. The raw gas is cooled down in the collector column and the heavy tars are condensed. A bleed stream from the collector cooling circuit containing the heavy tars is drawn off and recycled to the gasifier.

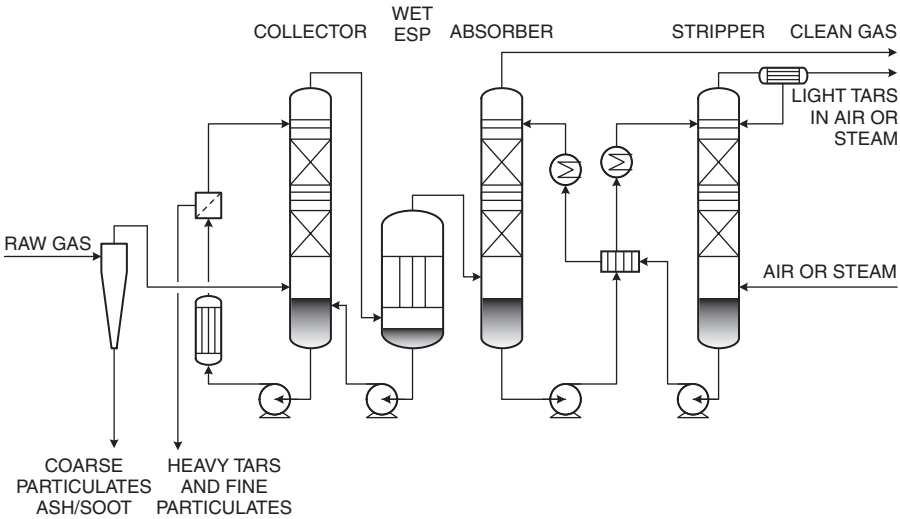

Figure 8.12 OLGA biomass gas tar removal process (source: Köneman and van Paasen, 2007).

This stream also contains any fine particulate matter. A wet electrostatic precipitator collects the solid aerosols, as well as the oil/tar which is carried over from the collector column with the solids. The mixture of oil, tar and solids is then recycled back to the collector. In the absorber, the lighter, gaseous tars are absorbed by the scrubbing oil, which is then regenerated in the stripper. Air or steam can be used as stripping medium and used in the gasifier, thus ensuring destruction of the tars.

Both Fischer-Tropsch and SNG production have been successfully tested downstream of the OLGA laboratory-scale facilities.

8.3 CATALYTIC GAS CONDITIONING

8.3.1 CO shift

Besides having an important influence on the composition of the raw syngas from the gasifier itself, the CO shift reaction:

$$CO + H_2O \leftrightarrows CO_2 + H_2 \qquad -41\text{MJ/kmol} \tag{2.7}$$

can be and is operated as an additional and separate process from the gasifier at much lower temperatures, in order to modify the H_2/CO ratio of the syngas or maximize the total hydrogen production from the plant. As can be seen from the reaction (2.7), 1 mole of hydrogen can be produced from every mole of CO. The reaction

itself is equimolar, and is therefore largely independent of pressure. The equilibrium for hydrogen production is favored by low temperature.

The CO shift reaction will operate with a variety of catalysts between 200°C and 500°C. The types of catalyst are distinguished by their temperature range of operation and the quality (sulfur content) of the syngas to be treated.

High temperature (HT) shift

Conventional (high temperature) shift uses an iron oxide based catalyst promoted typically with chromium and more recently with copper. The operating range of these catalysts is between 300°C and 500°C. If much above 500°C, sintering of the catalyst sets in and it is deactivated. HT shift catalyst is tolerant of sulfur up to a practical limit of about 100 ppmv, but is likely to lose mechanical strength, particularly if subjected to changing amounts of sulfur.

An important aspect in the design of CO shift in the gasification environment, where inlet CO contents of 45% (petroleum residue feed) to 65% (coal feed) are common, is the handling of the heat of the reaction, particularly under end-of-run conditions where an inlet temperature of 350°C or more may be necessary. On the one hand, the reaction must be performed in several stages to avoid excessive catalyst temperatures and to have an advantageous equilibrium. On the other hand, optimum use must be made of the heat.

One such arrangement is shown in Figure 8.13. Desulfurized syngas containing about 45 mol% CO, which leaves the AGR at about 54 bar and ambient temperature, is heated and water-saturated at a temperature of about 215°C by water which has been preheated with hot reactor effluent gas. The saturated gas is further preheated to the catalyst inlet temperature of between 300°C and 360°C. The steam loading from the saturator is such that only the stoichiometric steam demand for the reaction is required to be added from external sources. In the first reaction stage, the CO is reduced to a level of about 7–8 mol% at an outlet temperature of about

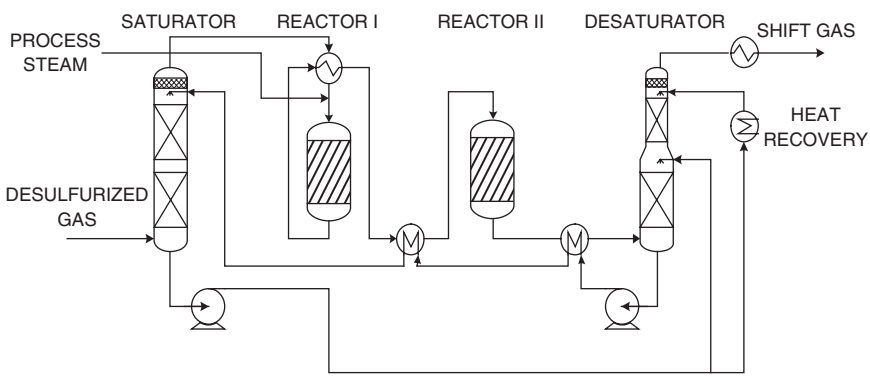

Figure 8.13 CO shift with saturator–desaturator circuit (source: Higman, 1994).

500°C. The outlet gas is cooled to a temperature of about 380°C in the gas and water preheaters before entering the second catalyst bed. Here, the residual CO is reduced to about 3.2 mol%. The gas is then cooled in a direct contact desaturator tower. There are a number of different designs, particularly for the first reactor, which incorporate the gas–gas heat exchanger as an internal. In such reactors, the exchanger is arranged centrally inside an annular catalyst bed with an axial (Lurgi) or axial–radial (Casale) gas-flow pattern. Alternative methods of controlling the catalyst outlet temperature include inter-bed condensate injection (e.g. Toyo). The use of an isothermal steam-raising reactor has been proposed, and although such a solution has been employed in a steam reformer plant, none is recorded at the high CO inlet concentrations involved in a gasification plant.

Typical catalyst lifetime for the first bed in a gasification situation is 2–3 years, which is considerably shorter than for a steam reforming situation. This is generally attributed to the high operating temperatures associated with high CO concentrations in the inlet gas. On a moles converted basis over the lifetime of the catalyst, the performance in the gasification context is comparable with that of steam reforming.

Low temperature (LT) shift

Low temperature shift operates in the temperature range 200–270°C, and uses a copper–zinc–aluminum catalyst. It is used in most steam reforming-based ammonia plants to reduce residual CO to about 0.3 mol%, a requirement for a downstream methanator, but has generally not been applied in gasification-based units. On the one hand, it is highly sulfur sensitive, and even with 0.1 ppmv H_2S in the inlet gas will, over time, become poisoned. A second reason for its lack of use, particularly in oil gasification plants, is the effect of the higher pressure on the water dewpoint in the gas. Operation near the dewpoint will cause capillary condensation and consequent damage to the catalyst. With a dewpoint of about 215°C and a temperature rise of 25–30°C, there is not much margin for error below the upper temperature limit of 270°C, when recrystallization of the copper catalyst begins. The first application of low temperature shift at high pressure was in Shell's Pernis gasification facility, which has now performed successfully for several years (de Graaf *et al*., 2000).

Medium temperature (MT) shift

An improved copper–zinc–aluminum catalyst able to operate at higher exit temperatures (300°C) than conventional LT shift has been developed, particularly for use in isothermal reactors. No application in gasification plants is known.

Raw gas shift

For applications where it is desired to perform CO shift on raw syngas, a cobalt–molybdenum catalyst, variously described as "sour shift" or "dirty shift", can be

used. In some parts of the literature this catalyst is described as sulfur-tolerant. This is actually a misnomer, since the catalyst requires sulfur in the feed gas to maintain it in the active sulfided state. It is generally applied after a water quench of the raw syngas, which typically will provide a gas at about 250°C saturated with sufficient water to conduct the shift reaction without any further steam addition. For an ammonia application the raw gas shift is typically configured as two or three adiabatic beds with intermediate cooling, resulting in a residual CO of about 1.6 or 0.8 mol%, respectively.

An important side effect of the raw gas shift catalyst is its ability to handle a number of other impurities characteristic of gasification. COS and other organic sulfur compounds are largely converted to H_2S, which eases the task of the downstream AGR. HCN and any unsaturated hydrocarbons are hydrogenated.

Carbonyls are decomposed and deposit as sulfides, which increases pressure drop over the bed. Selective removal of arsenic in the feed is also claimed (BASF, undated).

8.3.2 COS hydrolysis

In all synthesis gases produced by gasification, sulfur is present not only as H_2S, but also as COS. Typically, a syngas from the gasification of a refinery residue with 4% sulfur may contain about 0.9 mol% H_2S and 0.05 mol% COS. While some washes such as Rectisol can remove the COS along with the H_2S, others, particularly amine washes, require the COS to be converted selectively to H_2S if the sulfur is to be substantially removed. This is best achieved by catalytic COS hydrolysis, according to the reaction:

$$COS + H_2O \leftrightarrows H_2S + CO_2 \qquad -30\,\text{MJ/kmol} \tag{8.3}$$

Commercially, this reaction takes place over a catalyst at a temperature in the range of 160–300°C. Various catalysts are available, including a promoted chromium oxide-alumina, pure activated alumina or titanium oxide (Higman and Kalteier, 2000; Puertas Daza and Ray, 2004). Lower temperatures favor the hydrolysis equilibrium. Typically, the optimum operating temperature is in the range 150–200°C. Depending on process conditions, the residual COS can be reduced to the range of 5–30 ml/Nm³. This catalyst also promotes the hydrolysis of HCN.

The catalyst operates in the sulfided state, and is not poisoned by heavy metals or arsenic. Halogens in the gas will, however, reduce activity, selectivity and lifetime – a fact that needs to be addressed carefully in coal gasification applications. In applications downstream gasification of refinery residues, nickel and iron carbonyls, which may have formed upstream, can decompose, depositing nickel or iron sulfide on the catalyst bed and thus creating an increased pressure drop over the system. Typically, a guard bed which can be taken off line during normal operation is installed upstream of the COS hydrolysis bed to catch these deposits.

Table 8.6
COS hydrolysis performance

		Inlet	Outlet
CO_2	mol%	5.0	
CO	mol%	45.0	
H_2	mol%	45.0	
CH_4	mol%		
N_2	mol%		
H_2S	mol%	0.71	
COS	ml/m³	300	10
H_2O	kg/Nm³	0.086	
Pressure	bar	50	
Temperature	°C	170	
Dewpoint	°C	150	

Source: Higman and Kalteier, 2000.

For any application, care must be taken to avoid catalyst degradation by liquid water. Catalyst manufacturers recommend that the bed temperature be maintained at least 20–30°C above the water dewpoint under all circumstances.

Figure 8.14 shows a typical COS hydrolysis flowsheet for oil gasification; a typical operation is shown in Table 8.6 (Higman and Kalteier, 2003).

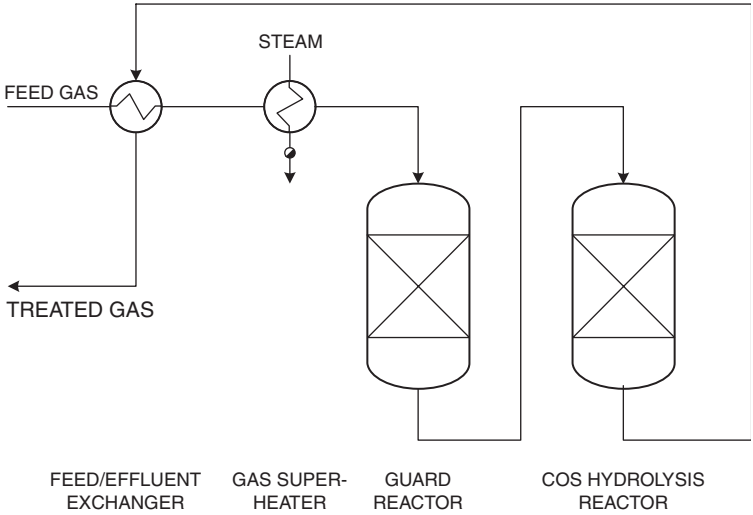

Figure 8.14 Typical COS hydrolysis flowsheet for oil gasification.

8.3.2 Methanation

Methanation of carbon oxides in synthesis gas according to the reactions:

$$CO + 3H_2 \leftrightarrows CH_4 + H_2O \qquad \Delta H = -206\ \text{kJ/mol} \tag{8.4}$$

and

$$CO_2 + 4H_2 \leftrightarrows CH_4 + 2H_2O \qquad \Delta H = -168\ \text{kJ/mol} \tag{8.5}$$

can be used for two distinct purposes. One is the synthesis of bulk quantities of methane as required for SNG manufacture (see section 7.2.3); the other is to remove small quantities of carbon oxides from a raw hydrogen, where these act as a poison to downstream synthesis processes such as ammonia synthesis, or are otherwise undesirable in the product hydrogen. It is only in this latter function of hydrogen purification that we will discuss their application.

The reactions take place over a fixed, adiabatic bed of nickel catalyst at temperatures in the range of 300–450°C (Figure 8.15). As can be seen from the heats of reaction, these reactions are both highly exothermic, and 1% CO in the raw gas will cause a temperature rise of 72°C; 1% CO_2 a rise of 55°C. Typically it would be preferable to keep the outlet temperature to a maximum of 400°C, from the point of view of both pressure vessel design and also equilibrium considerations. Suitable precautions against, e.g. a CO_2 breakthrough from an upstream wash must be taken. At this temperature an outlet concentration of 10 ppmv CO + CO_2 can be

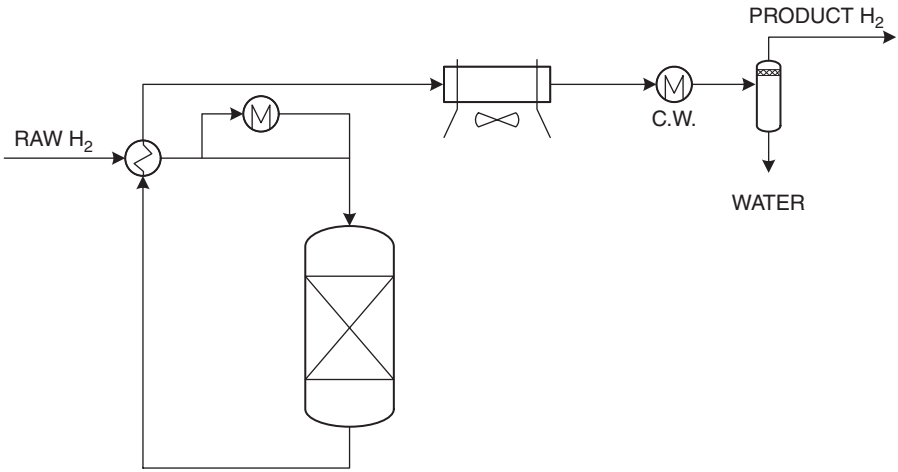

Figure 8.15 Hydrogen purification by methanation.

achieved. The temperature rise limits the concentration of carbon oxides at the inlet to about 2%. In practice, inlet concentrations of about 0.8% are aimed at to limit the hydrogen loss.

In the normal operating condition the inlet gas is heated in the feed–effluent exchanger by the hot reactor outlet to between 250°C and 330°C, which is sufficient to start the methanation reactions. An additional heater, which may be steam- or electric-heated, or even a fired heater, is provided for start-up. After passing through the methanation reactor, the gas is cooled to ambient temperature and most of the water is condensed out of the product hydrogen. Typically, the hydrogen content in the product is about 98%.

8.4 CRYOGENIC GAS TREATMENT

As seen in the applications for ammonia and carbon monoxide (Chapter 7), some tasks require cryogenic gas processing. The two most important such processes used in connection with gasification are the liquid nitrogen wash (LNW) and partial condensation. A third process used in connection with syngas from steam reformers is the liquid methane wash. This process requires 2–3% methane in the feed gas, and is therefore generally unsuited for use with high temperature gasification processes and will not be discussed further.

8.4.1 Liquid nitrogen wash

The liquid nitrogen wash is used as a final purification step in the production of ammonia synthesis gas. In addition to the two minimum requirements of removing carbon monoxide (a catalyst poison) and adjusting the stoichiometric ratio, $H_2/N_2 = 3$, the process also removes inerts such as methane and argon, delivering an almost inert-free syngas.

The liquid nitrogen wash, as shown in Figure 8.16, is typically located downstream of a Rectisol unit, so that the feed gas is already at about −60°C and only contains traces of CO_2. Pre-purification in molecular sieves removes the final traces of CO_2 and methanol to prevent them freezing out on the plate heat exchangers in the cold box. The raw hydrogen containing, typically, some 4–5 mol% CO, and the nitrogen, are cooled against the ammonia syngas product. The nitrogen is liquefied in the process. Methane and argon condense out of the feed stream. Some of the liquid nitrogen is used to wash the carbon monoxide out of the feed gas in the wash column. Additional nitrogen is added to make up the stoichiometric ratio, before the product syngas is reheated. At operating pressures of about 50 bar, the refrigeration balance is maintained by the Joule-Thompson effect. At lower pressures, some of the nitrogen may have to be supplied liquid from the ASU. The hydrogen yield is typically 98% or higher. Table 8.7 contains a typical mass balance.

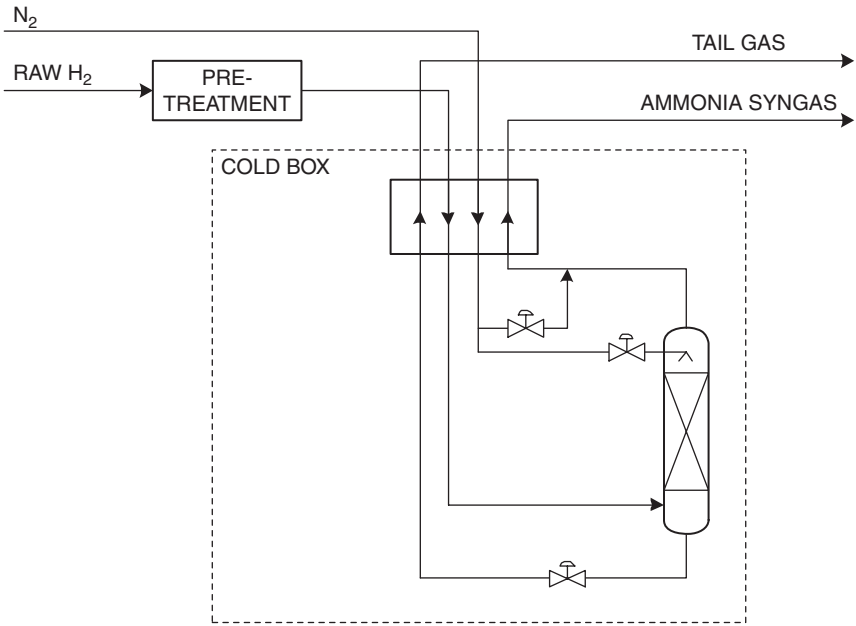

Figure 8.16 Typical liquid nitrogen wash unit.

Table 8.7
Mass balance for a typical liquid nitrogen wash

		Raw hydrogen	Nitrogen	Ammonia syngas	Tail gas
CO_2	mol%	0.00			
CO	mol%	4.74			58.54
H_2	mol%	94.81		75.00	9.10
CH_4	mol%	0.26			3.21
N_2	mol%	0.09	100.00	25.00	27.91
Ar	mol%	0.10			1.24
H_2O	mol%	0.00			
Dry gas	kmol/h	3940	1321	4942	319
Pressure	bar	47.6	50.0	44.5	1.5
Temperature	°C	−60	25	−65/20	20

8.4.2 Partial condensation

Partial condensation is used to recover a high purity (>98.5 mol%) carbon monoxide stream together with raw hydrogen from a syngas stream. Where pure hydrogen is required, a PSA unit is generally used for final clean-up.

As with the liquid nitrogen wash, the feed syngas is pre-purified in a molecular sieve to remove moisture and carbon dioxide (Figure 8.17). The gas entering the cold box is cooled down in counter-current with the exiting product streams. Most of the carbon monoxide condenses and is separated from the hydrogen vapor stream in the high-pressure separator. The liquid stream still contains some dissolved hydrogen, as well as the methane in the syngas. The hydrogen stream is reheated back up to ambient temperature as a product stream. The liquid is flashed into the MP separator, where the dissolved hydrogen flashes out, leaving a CO/CH_4-rich liquid stream. This is further flashed into the LP column, where high purity CO is recovered as the top product, which is then reheated to ambient temperature. The methane-rich bottom product, which still contains some CO, and the hydrogen from the MP separator are reheated as tail gas. Table 8.8 contains a typical mass balance. Note that with feed gas richer in CO as from a coal or oil gasifier, then the CO yield will be higher.

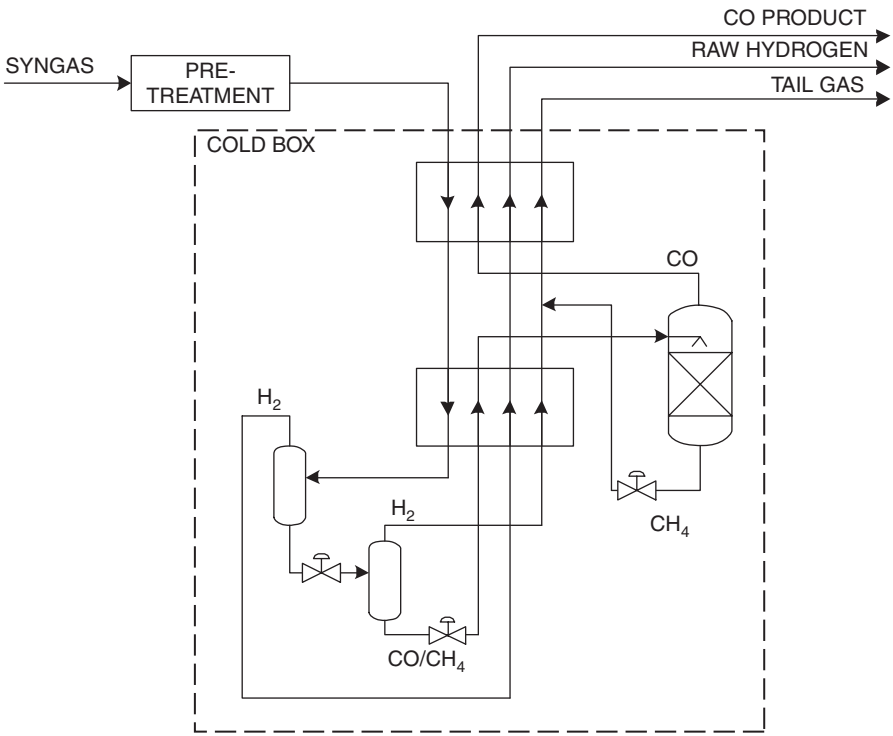

Figure 8.17 Typical partial condensation unit.

Table 8.8
Mass balance for a typical partial condensation wash

		Syngas Feed	Raw Hydrogen	CO Product	Tail Gas
CO_2	mol%	0.00			
CO	mol%	38.33	8.51	98.51	20.69
H_2	mol%	59.58	91.49		60.32
CH_4	mol%	0.31			2.09
N_2	mol%	1.60		1.49	7.66
Ar	mol%	0.18			1.23
H_2O	mol%	0.00			
Dry gas	kmol/h	727	393	226	108
Pressure	bar	25	23	1.3	1.3
Temperature	°C	30	25	25	25

There are a number of variations to this process, in particular with respect to managing the refrigeration balance. If the hydrogen is not required at high pressure, it can be passed through an expander to cover the refrigeration balance. An alternative is to use a CO recycle.

8.5 SULFUR RECOVERY

The sulfur compounds from the feedstock of a gasification-based process are generally removed from the synthesis gas as a concentrated stream of hydrogen sulfide and carbon dioxide, known as acid gas. Depending on the design of the upstream AGR unit, the acid gas may contain other sulfur species, such as COS, as well as ammonia and hydrogen cyanide. It is unacceptable to emit H_2S, a highly toxic, foul-smelling gas, to the atmosphere, so it is necessary to fix it in one form or other. There are essentially two alternative products in which the sulfur can be fixed, either as liquid or solid elemental sulfur, or as sulfuric acid. The choice of product will depend on the local market. Where there is a strong local phosphate industry, then there will be a good local market for sulfuric acid. If this is not the case, then elemental sulfur will probably be the better choice, since bulk transport of this material is much easier than of the concentrated sulfuric acid.

8.5.1 The Claus process

The basic Claus process for substoichiometric combustion of H_2S to elemental sulfur was developed as a single-stage process on the basis of reaction (8.8) at the end

of the nineteenth century. During the 1930s it was modified into a two-stage process in which initially one-third of the H_2S was combusted to SO_2 and water and, in a second low temperature catalytic stage, the SO_2 was reacted with the remaining H_2S to sulfur. Operating the second stage at a comparatively low temperature (200–300°C) used the more favorable equilibrium to achieve much higher sulfur yields than had been possible with the original process.

$$H_2S + 1\tfrac{1}{2}\,O_2 \leftrightarrows SO_2 + H_2O \tag{8.6}$$

$$2H_2S + SO_2 \leftrightarrows 2H_2O + 3/8\ S_8 \tag{8.7}$$

$$3H_2S + 1\tfrac{1}{2}\,O_2 \leftrightarrows 3H_2O + 3/8\ S_8 \tag{8.8}$$

Today there are innumerable Claus processes available, all of them ultimately variants of the modified Claus process. A typical standard Claus process is shown in Figure 8.18. In the first combustion stage all the H_2S is combusted with an amount of air corresponding to the stoichiometry of reaction (8.8) at a temperature in the range 1000–1200°C. The thermodynamics of the three main reactions above are such that about half the total sulfur is present in the outlet gas as elemental sulfur vapor, the rest as an equal mix of H_2S and SO_2. The hot gas is cooled by raising steam, and the sulfur already formed is condensed out. The removal of sulfur at this point assists in driving reaction (8.7) further to the right in the subsequent catalytic stage. The gas is reheated and passed over an alumina catalyst at a temperature of about 250–300°C, and cooled again to condense the sulfur formed. This may be performed

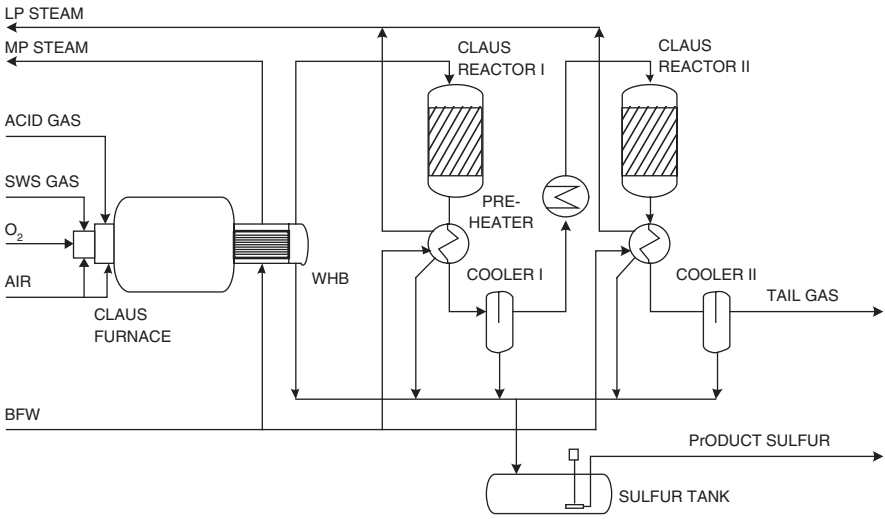

Figure 8.18 Typical two-stage Claus unit (source: Weiss, 1997).

a number of times to remove further amounts of sulfur. Typically, two (as shown in Figure 8.18) or three catalytic stages are used.

Oxygen Claus processes

A standard air-blown Claus plant is limited in the dilution of H_2S possible in the acid gas. At concentrations less than about 25–30 mol% H_2S, the temperature of the furnace is insufficient to maintain the reaction. While this is only rarely a limitation for plants gasifying refinery residues, gasification of low-sulfur coal can easily produce an acid gas with such a low H_2S concentration. Although it is possible to increase this concentration with some AGR systems, using oxygen instead of air as the oxidant in the Claus furnace often offers a more economic approach, especially since the oxygen demand for the Claus unit is only a fraction of that required for the gasifier itself. In addition to reducing the cost of concentration within the AGR, the cost of the Claus unit itself is lower. The chief determinant for sizing the equipment in a Claus plant is the volume of gas throughput. Elimination of all or most of the nitrogen involved with air-blowing reduces the gas volume by between 30% and 60%, depending on the acid gas quality. The equipment is accordingly smaller (Nehb, 1994).

There are a number of suppliers of oxygen-blown Claus technology, such as Lurgi, BOC and APCI/Goar. All use special burners to handle the oxygen. One example is the Lurgi OxyClaus burner, which is shown in Figure 8.19. The design of

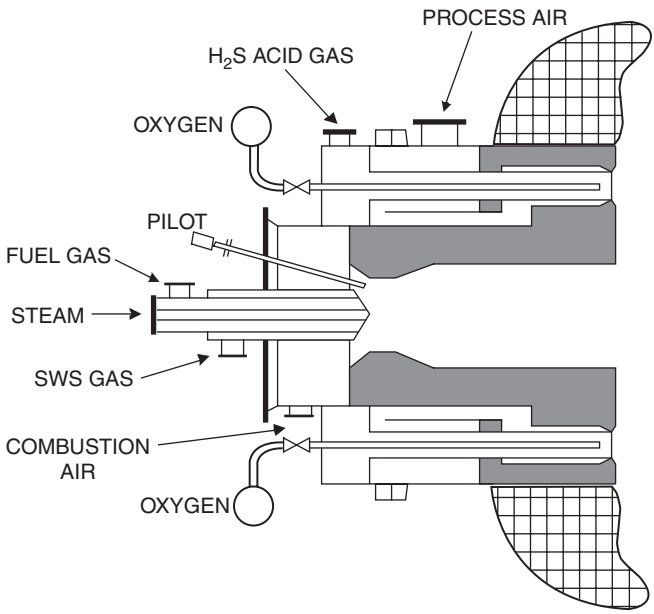

Figure 8.19 Lurgi OxyClaus burner (source: Knab *et al.*, 1994).

this multipurpose burner provides for operation on air, enriched-air or pure oxygen. The burner has a series of acid gas burners arranged concentrically around a central burner muffle. Each acid gas burner consists of three coannular lances, with oxygen being injected through the inner lance, acid gas through the intermediate one and air through the outer ring.

One aspect of processing sour gas in a Claus plant that deserves special mention is the problem that can occur when excessive amounts of ammonia or HCN are present in the gas. These components must be oxidized fully to molecular nitrogen, as otherwise ammonium salts are formed downstream and can plug the liquid sulfur lines. Ensuring complete oxidation is essentially a matter of ensuring that these components are combusted stoichiometrically at a sufficiently high temperature, even though the H_2S combustion is sub-stoichiometric.

The main path of ammonia and HCN in a gasification unit is into the process condensate, from which they are removed in a sour water stripper (SWS). A feature of the Lurgi OxyClaus burner is the separate nozzle for the sour water stripper off-gas, which allows this gas to be combusted with a different stoichiometry and therefore a higher temperature than the bulk acid gas from the AGR unit.

8.5.2 Tail gas treatment

Environmental regulations require a high degree of sulfur removal in Claus units. Typical are the German regulations (TA Luft), which require 97% sulfur recovery for plants up to 20 t/d S, 98% for plants between 20 and 50 t/d and 99.5% for larger plants. The thermodynamics of the Claus reactions do not allow achievement of these yields. It is therefore necessary to incorporate some form of tail gas treatment to achieve these yields.

Superclaus

One approach developed by Comprimo (now Jacobs) is the inclusion of a selective catalytic oxidation step after the second Claus stage, which goes by the name of Superclaus.

Hydrogenation and absorption

One class of tail gas treatment processes is typified by Shell's SCOT (Shell Claus Off Gas Treating) process, although there are now a number of similar processes on the market. The principle arrangement of all these processes is similar, and is portrayed in Figure 8.20. The tail gas is hydrogenated in a catalytic reactor, so that all sulfur species are converted to H_2S. The gas is then quenched with water and fed to an amine scrubbing unit to remove the H_2S. Since the proportion of H_2S in the gas at this point of the plant is low, it is important for the economics to choose a selective washing system, typically MDEA. The sulfur-rich gas from the SCOT regenerator is recycled to the Claus furnace. Alternatively, the regeneration can be integrated with that of a main H_2S amine wash.

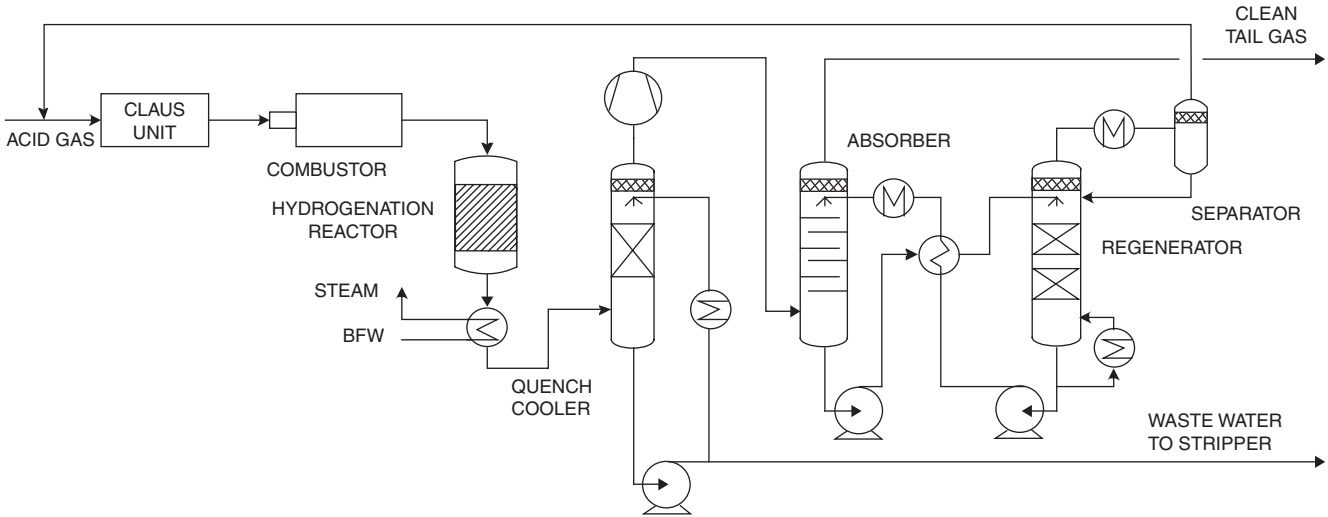

Figure 8.20 Typical tail gas treatment plant.

Other systems using hydrogenation and subsequent H_2S removal are Beavon, which uses a Stretford wash for H_2S removal (but now also uses MDEA), and others, which use (for example) Flexsorb.

Sub-dewpoint processes

An alternative to hydrogenation and absorption is to continue making use of the Claus reaction, but to do this at lower temperatures, at which the sulfur condenses out in the catalyst bed. Such processes include Amoco's Cold Bed Adsorption (CBA) process and the SNEA-Lurgi Sulfreen process.

The Sulfreen process, depicted in Figure 8.21, serves as a typical example of this class of tail gas treatment. The process is a cyclic one, which uses one reactor in the adsorption mode while the second is being regenerated. For large plants it can be advantageous to include a third reactor. During the adsorption step, tail gas is passed over the catalyst at a temperature of 120–140°C. The low temperature enables the Claus reaction to proceed further towards the production of sulfur, which is adsorbed on the catalyst. In the regeneration mode, hot tail gas is used to desorb the sulfur, which is then recovered in a steam-raising sulfur condenser. The heat for the regeneration loop can be supplied by a separate fired heater (as shown) or by heat recovery from the thermal incinerator. Overall, sulfur recoveries of 99.0–99.5% can be achieved with a standard Sulfreen unit, depending on the Claus feed gas quality. Additional enhancements can be incorporated to achieve higher recoveries, such as adding an upstream hydrolysis (Hydrosulfreen, 99.5–99.7%) or a downstream direct oxidation (Carbosulfreen >99.8%) (Lell, 1993).

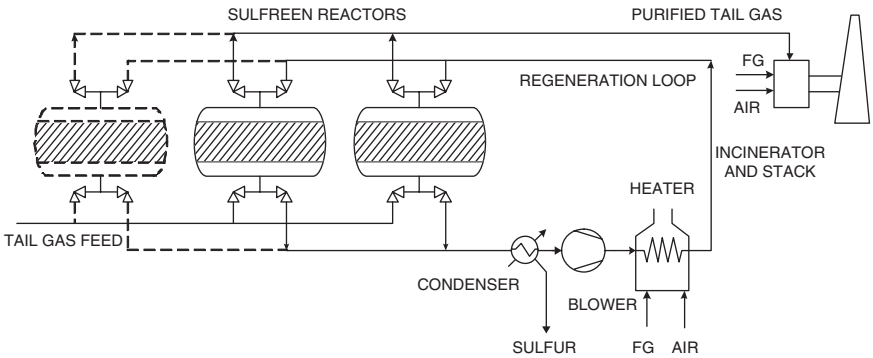

Figure 8.21 Sulfreen tail gas process (source: Lell, 1993).

8.5.3 Integration in an IGCC

In contrast to most chemical applications for gasification, the presence of CO_2 in IGCC syngas is not only no problem but is even beneficial, in that it increases the

mass flow through the gas turbine and therefore contributes to the electrical energy output. This fact allows the integration of the tail gas treatment of the Claus unit into the main AGR system in a manner that eliminates the SRU tail gas as an emission completely. The principle is shown in Figure 8.22. The tail gas from the Claus plant, which contains both H_2S and SO_2, is hydrogenated and recycled back to the AGR, where the sulfur is again removed from the syngas. Clearly, for the economics of this system it is necessary to keep the recycle compression costs low. This puts a premium on the selectivity of the AGR, which in the IGCC scenario is anyway desirable, so as to keep the CO_2 in the recycle low. Furthermore, an oxygen-blown Claus unit must be used to avoid large quantities of nitrogen placing an unnecessary load on the recycle compressor. This type of integration has proved itself both in coal applications (Puertollano using an MDEA AGR) and for oil gasification (Sarlux using Selexol).

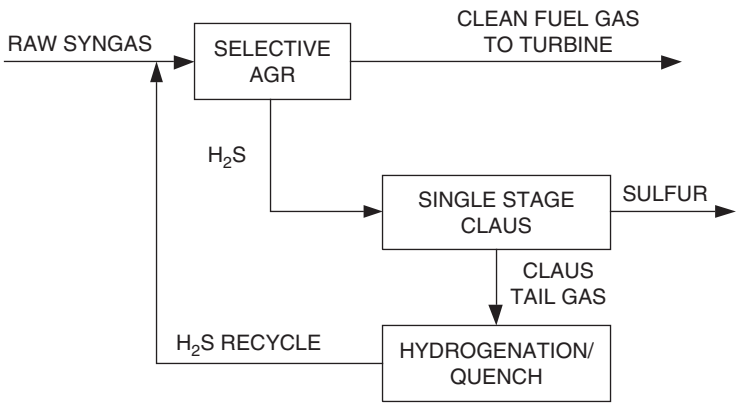

Figure 8.22 Integration of Claus unit in an IGCC.

8.5.4 Sulfuric acid

An alternative outlet for sulfur to the production of merchant sulfur is sulfuric acid. This is particularly interesting in locations where there is significant production of phosphate fertilizers, such as Florida, where the Polk IGCC unit processes its acid gas to sulfuric acid rather than sulfur. Other examples can be found in ammonia plants, which have formed the core of complex fertilizer production sites in Portugal and China, for example. Various technologies are available from, for example, Haldor Topsøe, MECS (formerly Monsanto) or Outotec (formerly Lurgi) (Müller, 2003). The Topsøe WSA process is described here as an example.

Wet sulfuric acid process

Processing of H_2S to sulfuric acid differs from conventional acid plants (whether using sulfur or metallurgical off gases as feed) in that water is already present in the converter. This water reacts immediately with the SO_3 formed there, and therefore demands a totally different approach to the recovery of liquid acid compared with a standard double absorption unit.

The acid gas is incinerated to SO_2 in a burner followed by a waste heat boiler (see Figure 8.23). The gas typically contains 5–6% SO_2, and all the water from the combustion of the H_2S and other combustibles in the acid gas. The gas leaving the waste heat boiler has a temperature of approximately 400°C. The gas then enters the SO_2 converter, which contains two or more catalyst beds, depending on the SO_2 content and the desired degree of conversion. Since the reaction:

$$SO_2 + ½O_2 \leftrightarrows SO_3 \qquad \Delta H = -99\ \text{MJ/kmol} \tag{8.9}$$

in the converter is exothermal, the gas is cooled between the beds in order to favor the SO_2/SO_3 equilibrium. After the last conversion stage the gas is cooled, whereby the SO_3 reacts with the water vapor to form sulfuric acid as follows:

$$SO_3 + H_2O \leftrightarrows H_2SO_4 \qquad \Delta H = -101\ \text{MJ/kmol} \tag{8.10}$$

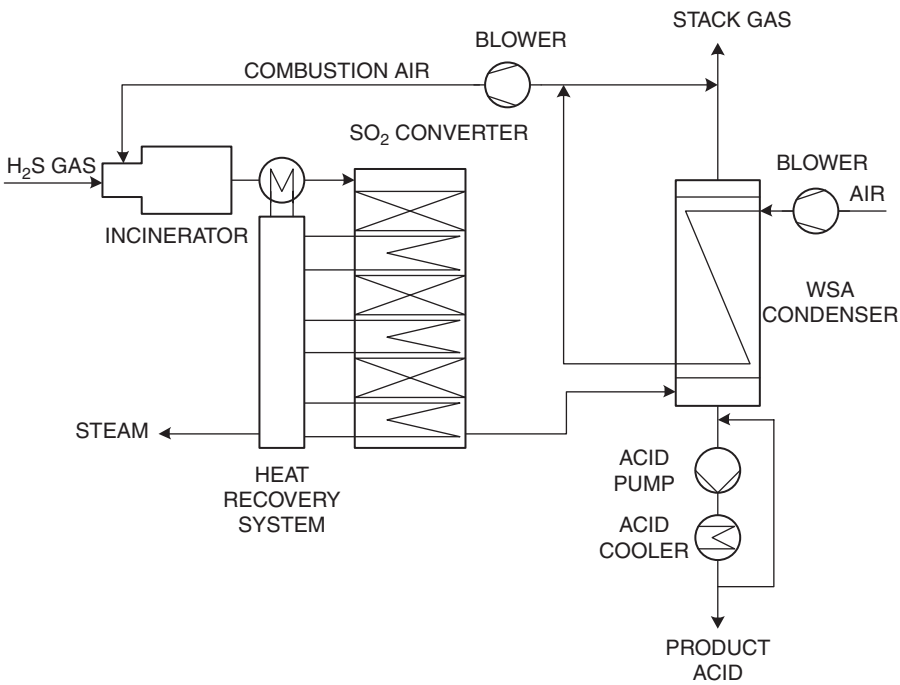

Figure 8.23 Topsøe wet sulfuric acid plant (source: Christiansen, 2005).

The process gas then goes to the WSA condenser. The process gas flows upwards inside the tubes of the condenser, which are cooled on the outside by ambient air. Sulfuric acid condenses in the tubes and flows downward while being concentrated in counter-current flow with the hot process gas. The sulfuric acid is collected at the bottom of the condenser and further cooled to ambient temperature.

If necessary, NO_x in the incinerator off-gas may be reduced by introducing a selective catalytic reduction (SCR) reactor upstream of the SO_2 converter.

REFERENCES

Air Liquide. Company website, available at www.airliquide.com.

Air Products (2001). Company brochure. Allentown: Air Products.

Allam, R.J., Russeck, S.L., Smith, A.R. and Stein, V.E. (2000). "Cryogenics and ceramic membranes: current and future technologies for oxygen supply in gasification systems". Paper presented at IChemE Conference "Gasification 4 the Future", Noordwijk.

Allam, R.J., Foster, P.F. and Stein V.E. (2002). "Improving gasification economics through ITM oxygen integration". Paper presented at IChemE Conference "Gasification: The Clean Choice for Carbon Management", Noordwijk.

Armstrong, P.A., Stein, V.E., Bennet, D.L. and Foster, E.P. (2002). "Ceramic membrane development for oxygen supply to gasification applications". Paper presented at Gasification Technologies Conference, San Francisco.

Armstrong, P.A., Foster, E.P., Bennet, D.L. and Stein, V.E. (2006). "ITM oxygen: scaling up a low-cost oxygen supply technology". Paper presented at Gasification Technologies Conference, Washington.

Bajohr, S., Hoferer, J., Reimert, R. and Schaub, G. (2002). "Thermische und katalytische Umsetzung von Kohlenwasserstoffen in Rohgasen aus der Pyrolyse und aus der Vergasung von Biomassen". Paper presented at the DGMK Conference "Energetische Nutzung von Biomassen", Velen.

BASF (undated). *BASF Catalyst K 8-11*, technical leaflet. Ludwigshafen: BASF AG.

Bergmann, P.C.A., van Paasen, S.V.B. and Boerrigter, H. (2002). "The novel 'OLGA' technology for complete tar removal from biomass producer gas". Paper presented at Pyrolysis and Gasification of Biomass and Waste Expert Meeting, Strasbourg.

Boerrigter, H., van Paasen, S.V.B., Bergmann, P.C.A., Könemann, J.W., Emmen, R., and Wijnaands, A. (2005). *"OLGA" Tar Removal Technology: Proof of Concept for Application in Integrated Biomass Gasification Combined Heat and Power Systems*. Petten: ECN (available on www.olgatechnology.com).

Butzert, H.E. (1976). Ammonia/methanol plant startup. *Chemical Engineering Progress*, 72: 78–81.

Christansen, T. (2005). "Topsøe wet gas sulphuric acid (WSA) technology for refinery applications". Paper presented at Topsøe Refining Seminar, Sao Paulo, Brazil.

Collodi, G. (2001). "Commercial operation of ISAB Energy and Sarlux IGCC". Paper presented at Gasification Technologies Conference, San Francisco.

Corrella, J., Toledo, J.M. and Padilla, R. (2004). Catalytic hot gas cleaning with monoliths in biomass gasification in fluidized beds: 1. Their effectiveness for tar elimination. *Industrial and Engineering Chemistry Research*, 43: 2433–2445.

de Graaf, J.D., Zuideveld, P.L., van Dongen, F.G. and Hölscher, H. (2000). "Shell Pernis Netherlands Refinery Residue Gasification Project". Paper presented at IChemE Conference "Gasification for the Future", Noordwijk.

Grünewald, G. (1989). "Selective physical absorption using the Purisol process". Paper presented at 6th Continental Meeting of the European Chapter of the GPA, Bremen.

Higman, C.A.A. (1994). "Gasification of heavy residues". Paper presented at IMP Gasification Seminar, Mexico City.

Higman, C.A.A. and Kalteier, P. (2003). Carbonyl sulfide conversion. In: *Ullmann's Encyclopedia of Industrial Chemistry*, 6th edn, vol. 15. Weinheim, Wiley VCH, pp. 387–388.

Hofbauer, H. (2002). "Biomass CHP-Plant Güssing: a success story". Paper presented at Pyrolysis and Gasification of Biomass and Waste Expert Meeting, Strasbourg.

Højlund Nielsen, O.E. and Sirgurdardottir, I.D. (1995). "Hot gas cleaning of coal gases by sequential absorption". Paper presented at 12th Annual International Pittsburgh Coal Conference, Pittsburgh.

Knab, H., Neumann, G. and Nehb, W. (1994). "Operating experience with Lurgi OxyClaus technology". Paper presented at Achema, Frankfurt.

Könemann, H.W.J. and van Paasen, S.V.B. (2007). "OLGA tar removal technology: 4MW commercial demonstration". Paper presented at 15th European Biomass Conference, Berlin.

Köppel, W., Bajohr, S. and Reimert, R. (2004). "Rohgaskonditionierung bei hoher Temperatur: Stand der Technik, eine Übersicht". Paper presented at the DGMK Conference "Energetische Nutzung von Biomassen", Velen.

Köppel, W., Bajohr, S. and Reimert, R. (2006). "Teerreformierung – ein schon gelöstes Problem?" Paper presented at the DGMK Conference "Energetische Nutzung von Biomassen", Velen.

Kohl, A. and Nielson, R. (1997). *Gas Purification*. Boston: Gulf Publishing.

Koss, U., Meyer, M. and Schlichting, H. (2002). "Zero emissions IGCC with Rectisol technology". Paper presented at Gasification Technologies Conference, San Francisco.

Kriebel, M. (1989). Gas production. In: *Ullmann's Encyclopedia of Industrial Chemistry*, 5th edn, vol. A12. Weinheim: VCH Verlagsgesellschaft, p. 265.

Kubek, D.J., Polla, E. and Wilcher, F.P. (1997). "Purification and recovery options for gasification". Paper presented at IChemE Conference "Gasification Technology in Practice", Milan.

Kubek, D.J., Sharp, C.R., Kuper, D.E., Clark, M.E., DiDio, M. and Whysall, M. (2002). "Recent Selexol, PolySep and PolyBed operating experience with gasification for power and hydrogen". Paper presented at Gasification Technologies Conference, San Francisco.

Lell, R. (1993). "New technology for sulfur recovery from tail gases based on the Sulfreen process". Paper presented at "Sulfur 93" Conference, Hamburg.

Miller, G.Q. and Stoecker, J. (1989). "Selection of a hydrogen process". Paper presented at NPRA Annual Meeting, San Francisco.

Morris, M. and Waldheim, L. (2002). "Update on Project ARBRE, UK". Paper presented at IChemE Conference "Gasification: The Clean Choice for Carbon Management", Noordwijk.

Müller, H. (2003). Sulfuric acid and sulfur trioxide. In: *Ullmann's Encyclopedia of Industrial Chemistry*, 6th edn, vol. 35. Weinheim: Wiley-VCH, pp. 34–38.

Nagl, G.L. (2001). "Liquid redox enhances Claus process". *Sulfur*, 274: 1–6.

Nehb, W. (1994). Sulfur. In: *Ullmann's Encyclopedia of Industrial Chemistry,* 5th edn, vol. A25. Weinheim: Wiley-VCH, pp. 507–567.

Praxair. Company website (available at www.praxair.com).

Puertas Daza, V. and Ray, J.L. (2004). "Elcogas IGCC in Puertollano: six years' experience with COS hydrolysis reactor catalysts". Paper presented at IChemE Gasification Conference, Brighton.

Rettger, P., Arnold, J., Jonkers, A. and Cathro, D. (2004). "Gasification in the Canadian oil sands: the Long Lake Integrated Upgrading Project". Paper presented at Gasification Technologies Conference, Washington.

Schlather, J. and Turk, B. (2007). Comparison of a new warm-gas desulfurization process versus traditional scrubbers for a commercial IGCC power plant. Paper presented at Gasification Technologies Conference, San Francisco.

Sharp, C.R., Kubek, D.J., Kuper, D.E., Clark, M.E., DiDio, M. and Whysall, M. (2002). "Recent Selexol and membrane/PSA operating experiences with gasification for power and hydrogen". Paper presented at Gasification Technologies Conference, San Francisco.

Simbeck, D. (2001). "Industrial perspective on hot gas clean-up". Paper presented at 5th International Symposium "Gas Cleaning at High Temperatures", Morgantown.

Smith, A.R. and Klosek, J. (2001). A review of air separation technologies and their integration with energy conversion processes. *Fuel*, 80: 115–134.

Stevens, D., Stern, L.H. and Nehb, W. (1996). "OxyClaus technology for sulfur recovery". Paper presented at Laurence Reid Gas Conditioning Conference, Norman, Oklahoma.

Supp, E. (1990). *How to Make Methanol from Coal*. Berlin: Springer.

Turk, B. and Schlather, J. (2007). "Novel technology platform for warm gas clean-up: progress from field testing with coal derived syngas". Paper presented at 2nd International Freiberg Conference on IGCC and XtL Technologies, Freiberg.

US Department of Energy. (2002). *Piñon Pine IGCC Power Project: A DOE Assessment*. DOE/NETL report 2003/1183. Washington, DC: US Department of Energy.

US Department of Energy. (2007). National Energy Technology Laboratory press release, 14 June.

Weiss, M.-M. (1997). "Selection of the acid gas removal process for IGCC applications", Paper presented at IChemE Conference "Gasification Technology in Practice", Milan.

This page intentionally left blank

Chapter 9

Economics, Environmental and Safety Issues

9.1 ECONOMICS

The economics of every major capital investment are individual to the project concerned. Given the broad range of applications and feedstocks, this is especially so for gasification. Furthermore, in a time of rapidly rising costs for all capital plant, it makes little sense to attempt to include up-to-date cost studies in a book of this nature. For such information the reader is referred to recent studies by, for example, EPRI (2007a), US Department of Energy (2007), IEA (2003) and updates, which appear from time to time. Nonetheless, a number of trends can be identified.

Gasification is generally a capital-intensive technology, which has, however, the capability of working with cheaper or more difficult feedstocks than many alternatives.

Ammonia

The capital intensity of gasification is clearly visible in the data presented in Table 9.1 for a 1800 t/d ammonia plant located in Northwest Europe based on different technologies and feedstocks. The capital estimates and feed rates are those of Appl (1999). While costs have risen dramatically since then, the fundamental relationship between capital and operating expenses has remained essentially similar.

These data can be presented in a manner that allows comparison of production costs with varying pricing for the different feedstocks, as in Figure 9.1. Based on these data, ammonia production by gasification of heavy residue becomes competitive with US$2.5/MMBTU natural gas, if the residue is valued at about US$20/t. The natural gas price must rise to over US$4/MMBTU before coal or petcoke can become a competitive feedstock.

Methanol

Higman made a similar study for methanol, comparing natural gas and vacuum residue feed (Higman, 1995). The results are, in principle, similar (Figure 9.2).

Table 9.1
Cost of ammonia production with different feedstocks

Feedstock	Natural gas	Vacuum residue	Coal
Process	Steam reforming	Gasification	Gasification
Feedstock price ($/MMBTU)	2.8	1.8	1.5
Total energy consumption (MMBTU/t NH_3)	27.0	36.0	45.5
LSTK for plant (10^6 $)	180	270	400
Total capital* (10^6 $)	250	350	500
Feedstock and energy costs ($/t NH_3)	75.60	64.80	68.25
Utilities ($/t NH_3)	3.78	3.24	3.41
Maintenance ($/t NH_3)	7.51	11.26	16.68
Personnel ($/t NH_3)	6.67	8.34	12.51
Overheads ($/t NH_3)	12.22	17.25	25.65
Financing costs** ($/t NH_3)	71.74	100.43	143.48
Total costs ($/t NH_3)	177.52	205.32	269.99

* Total capital (1998) includes turn-key lump sum price for plant and storage, spare parts, catalysts, clients in-house costs, offsites, working capital (3 months' basis).
**Assumed debt/equity ratio 60 : 40; depreciation 6%, 8% interest on debts, 16% ROI on equity.

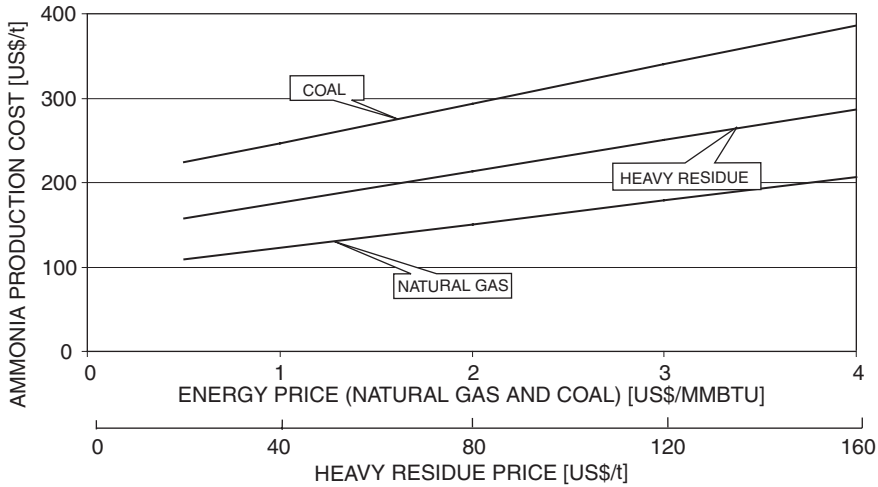

Figure 9.1 Production cost of ammonia from different feedstocks.
Note: Costs are based on Appl, 1999.

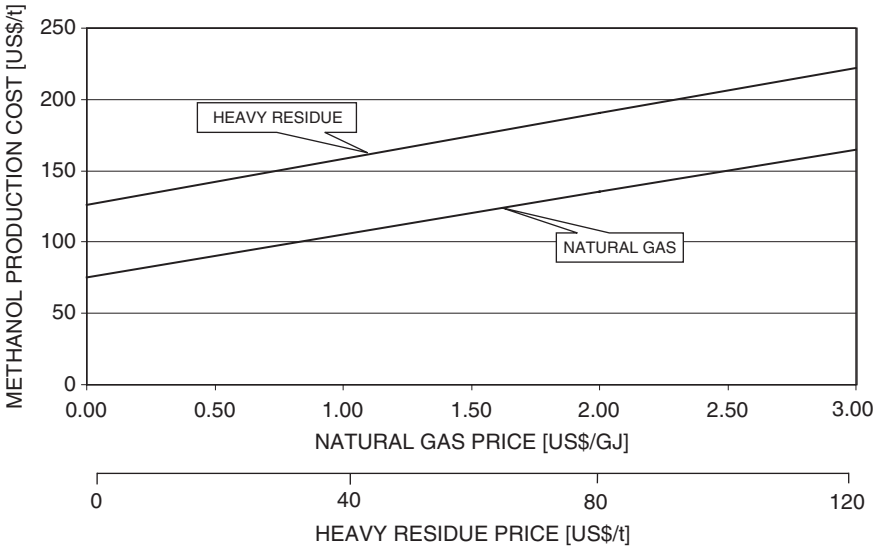

Figure 9.2 Production cost of methanol from different feedstocks.
Note: Costs are based on Higman, 1995.

His conclusions are that under the then prevailing economic conditions, it would not be competitive to manufacture methanol by gasifying locally available resid compared with importing methanol produced from cheap natural gas in a remote location; "If, however, strategic or other considerations demand that production be located in one of the major industrial countries, then a fall in the residue price could make additional capacity of this sort more attractive". Recently announced plans by the Eastman Chemical Company to build a petroleum coke-based methanol plant in Texas indicate that this view is still valid in 2007 (Costa, 2007).

Synfuels

The economics of gas to liquids (GTL) projects is dependent on both a cheap source of natural gas and the capital investment. The main incentive for such projects is to provide a means of bringing gas from remote or other locations where it has little value to the world energy market. For long-term contracts at such locations, natural gas prices of around US$0.70/GJ are achievable – a very different situation from gas prices in Western Europe or North America.

The investment costs for GTL projects have dropped dramatically since the first generation (Bintulu, Mossel Bay) projects with the introduction of "second-generation" technologies. Data published in 2002 indicate specific CAPEX of US$20,000–30,000 per installed bpd of liquid product capacity. Clearly, for a remote location, the cost development of a local infrastructure will be a major uncertainty in such numbers and will be highly project-specific.

Taking this data for a 50,000 bpd project and a conversion efficiency of 8.5 GJ/bbl, production costs work out at about US$ 23/bbl of refined product at the remote location. Given the premium quality of the product, this is a figure, which was able justify such projects at the then prevailing oil prices, but the margins would not be spectacular. On the other hand the existence of such plants and the experience gained with them would be a rewarding investment should oil prices rise significantly. The break-even oil price for such a project today is more likely to be in the $35–40 range. For coal-to-liquids current break-even costs are equivalent to a crude oil price of about $45–50/bbl. This may look attractive with a current oil price of around $90, but the large capital investment and risk of reductions in the market price for oil have hindered the realization of coal-based projects to date.

Power production

As with chemical applications, the economics of power production using gasification technology are dependent on the clean utilization of cheap feedstocks. In many parts of the world the power industry is experiencing a period of change, brought about by privatization and deregulation, which does not make decision-making easy. In a study conducted in 2002 for the UK Department of Trade and Industry, it was found that even the cheapest technology, NGCC, was not viable at the then current UK electricity prices of around 0.02 £/kWh (~0.03 $/kWh) (Ricketts *et al.*, 2002). However, such a situation cannot be expected to continue over a longer period of time, so there is considerable value to reviewing the factors that can make gasification a competitive option. It must, however, be appreciated that there are two or even three markets that need to be considered separately. In the market for large utility plants, only coal and refinery residues can provide the feed volumes required. Biomass and waste are fuels that, for reasons connected with the logistics of the fuel supply, can only support small units (say <50 MW). At this scale, the cost of electricity production is higher than for utility-size plants; such projects can, however, attract financial support on the basis of environmental benefits or, in the case of waste, by charging a gate fee. The third market where gasification is showing promise is co-firing syngas from a biomass gasifier in a utility-scale boiler, thus securing the benefit of scale without overloading the fuel supply logistics.

Figure 9.3 shows a typical investment cost breakdown for a coal-based IGCC. The most striking aspect of such a presentation is the approximately equal investment required for syngas production (ASU, AGR and gasification) and for the conversion of the syngas into electricity. In a direct comparison with NGCC, this fact practically doubles the investment.

Holt (2007) has assembled a data on reported capital costs for power plant projects announced in the United States during 2006 and this is summarized in Table 9.2.

These numbers, which came from press statements and submissions to Public Utility commissions, must be treated with caution, since in no case is the exact project scope known. Some are known to include additional rail facilities or pipelines. Others

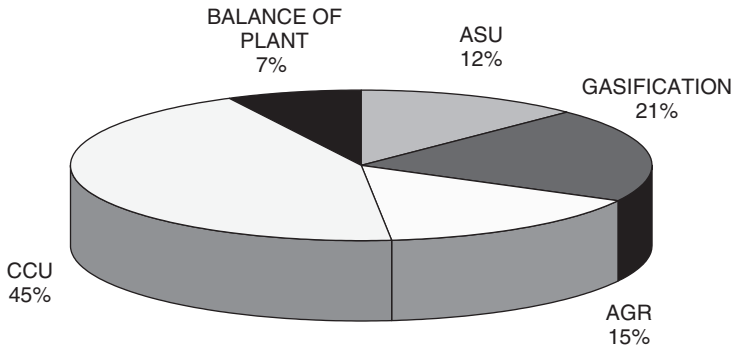

Figure 9.3 Capital cost breakdown for coal-fed IGCC (adapted from O'Keefe *et al.*, 2001).

Table 9.2
Reported cost data for new utility power plants in the USA

Owner	Plant name/ location	Net MW	Technology/ coal	Reported capital $ million	Reported capital $/kW
AEP SWEPCO	Hempstead, AR	600	USC PC/ PRB	1680	2800
AEP PSO/OGE	Sooner, OK	950	USC PC/ PRB	1800	1895
Duke Energy	Edwardsport, IN	630	GE RQ IGCC/ Bituminous	1985	3150
Duke Energy	Cliffside, NC	800	USC PC/Bit	1930	2413
NRG	Huntley, NY	620	IGCC/Bit, Pet coke, PRB	1466	2365
Otter Tail/GRE	Big Stone, SD	620	USC PC/ PRB	1500	2414
Southern Co.	Kemper Co. MS	600	KBR IGCC/ Lignite	1800	3000

Source: Holt, 2007.

may have some allowance for pre-investment in CO_2 capture. Nonetheless it is clear that costs for all power plant technologies have risen dramatically over the past five or so years.

Availability and reliability

As discussed, gasification is a capital-intensive process that provides a means of utilizing cheap and sometimes unpleasant feedstocks. It is therefore vital to the successful economics of a plant to ensure that it is operating at a high rate of utilization. This quickly becomes obvious when studying the figures in the examples above. An analysis will show that 1% higher availability (i.e. 3 days less per year off-stream) is worth almost a 3% increase in efficiency. It is also worth about 30% more than a 1% lower investment cost. These are facts of life for any capital-intensive production facility, and an awareness of this is important at every level of decision-making.

Gasification has not always had a good press when it comes to issues of reliability. This is partly because, still today, almost all plants are one-of-a-kind units which do not incorporate the benefits of standardization, and partly because the performance of demonstration plants has been more widely publicized than that of commercial operations. The technology is, however, also demanding in terms of operation and maintenance (O&M) know-how and understanding, and a failure to recognize this at the inception of a project is a mistake that can be very costly in terms of downtime. On the other hand, there are many plants in different parts of the world which demonstrate that, with the correct procedures in place, gasification can provide a reliability performance every bit as good as in alternative technologies.

When discussing matters of reliability and availability, it is important to ensure that data are comparable. To assist in ensuring a common understanding, the Gasification Technologies Council has published a set of *Guidelines for Reporting Operating Statistics for Gasification Facilities*, based on the concepts of planned and unplanned outage and on-stream time. These guidelines are reproduced in Appendix D.

Data on commercial operation are limited, but Higman has reported on the operation of a number of liquid feed plants (Higman, 1994). In another paper, he reports on three Indian plants producing 110–123% of their annualized nameplate capacity (Higman and Sharma, 1998). Laege and Pontow (2002) report regular reliabilities of over 95% achieved over a 15 year period. Trapp (2001) reports an on-stream time of 97.8% for a coal-fed plant.

Higman and colleagues made a systematic investigation into the reliability of IGCC and other gasification plants (Higman *et al.*, 2006). This paper includes information from three refinery-based IGCC in Italy, where availabilities of 90% and higher were achieved in the third and fourth years of operation. This paper was extended with a detailed documentation of public domain data on plant stoppages and much else in an EPRI report (EPRI, 2007b). The findings showed that over the period 2001–2003, the total outage time (planned plus unplanned) of four large IGCCs (250–300 MW_e) could be allocated to the causes shown in Table 9.3.

Table 9.3
IGCC availability by process area

	Four plants' average 2001–2003 (%)	Prognosis (base case) (%)	Prognosis ("E-class" availability) (%)
Unplanned outage			
ASU	3.27	0.5	0.5
Gasification	6.21	5.0	5.0
Gas treating	1.61	0.5	0.5
CCU	17.15	2.2	1.2
Total unplanned outage	28.24	8.2	7.2
Planned outage	Incl. in above	6.8	4.3
Available	71.76	85.0	88.5
Total	100.00	100.0	100.0

Source: EPRI, 2007.

The most surprising fact to come out of this analysis was the high loss of production due to issues in the combined cycle unit, in particular since none of these causes were related to the use of syngas as fuel. However, production losses due to failures in the oxygen supply and (to a lesser extent) gas treating were higher than industry averages for this type of equipment. The base case prognosis data were based on industry average data – in the case of the CCU, for F-class natural gas-fired gas turbines – and separation of planned and unplanned outage time. The result was an estimated availability of 85%. Improving the gas turbine availability to that achieved by natural gas-fired E-class turbines raised the availability to 88.5%. In neither of these cases was the availability projection for the gasification unit raised substantially over that of the measured data. Improvements in this area achieved by a systematic incorporation of all lessons learned from the 1990s demonstration unit generation plant could improve things a little further.

It should be recognized, however, that there is considerable difference in the performance of individual components depending on the feedstock. For liquid residue burners, for instance, an inspection is required every 4000 hours with an anticipated repair interval of 8000–12,000 hours. Compare this with the 2200 hour life reported for a coal feed injector (Trapp, 2001). While this difference is largely related to the difference in the abrasion characteristics of the feed, there are some indications that flashing of the water from a slurry feed exacerbates this situation (Clayton *et al*., 2002: 25).

Similarly, the very different ash in liquid residues and coals (both quantity and quality) has an important effect on refractory life. Refractories in residue service require minor repairs at 16 000 hour intervals with a full replacement on a 20,000 to 40,000 hour cycle (Higman, 1994), whereas in coal service uncooled

"refractory liners are reported to last in the order of 6–18 months" (Clayton *et al*., 2002: 26). The longest refractory life known to the authors was one plant that achieved nearly three years. This was only possible by operating at relatively low temperatures as part of a strategy specifically designed to protect the refractory.

Given this background, it is essential for the success of any gasification project to recognize all the relevant factors and build them into the design and O&M strategies from the beginning. It is not possible in a book of this nature to develop a universal algorithm for finding the appropriate strategy for any future project. Some suggestions are included in EPRI (2007b: 6.7, 6.8). It is important, however, to give some idea of successful strategies and the philosophies behind them.

Number of trains. For very large plants, there may be a minimum number of trains dictated by the largest available reactor's capacity. With the steady increase in unit capacities that has been visible over the past 20 years, this is, however, only likely to be a major issue for IGCC applications.

A second consideration is the behavior of the overall plant if one reactor is out of operation. If, as is the case in an ammonia plant, there are a considerable number of centrifugal compressors, then there is an incentive to maintain the overall plant operation close to or above the surge limit of the compressors. The strength of this incentive is, however, also dependent on a number of factors. With liquid residue feed only, the downtime due to burner changes needs to be planned in. This is usually a short operation – say 8–12 hours – if some reactor reheat is considered, so the production and energy loss is relatively small in a two-reactor configuration, especially if they are configured as two 60%-capacity units.

In a coal feed but otherwise similar situation, where the reactor is also refractory lined, there may be the need to consider relining a reactor in between major turnarounds. This is an activity that can last as long as 3 weeks (again, including time for cooling down and reheating the reactor). This is intolerable, because of both the loss of production, as well as the reduced energy efficiency in a two-reactor line-up. As a minimum a spare off-line reactor shell is required, which can be available, ready lined, prior to taking the operating reactor off-stream. The two reactors can then be swapped and restarted, saving a considerable length of downtime, while the lining repair can be carried out off-line. We know of one plant that took this philosophy one step further and executed the drying out and part of the refractory preheating off-line and swapped the (admittedly relatively small) reactors hot, thus saving even more downtime. The implementation of such a strategy (whether the reactor swap takes place hot or cold) is, however, dependent on the layout and detail design of the facility, which must include access and other features to permit the quick removal of a reactor.

Spare trains. In smaller plants, a strategy like the one outlined above may not be so appropriate. The saving in having two 50%- or 60%-versus two 100%-capacity reactors decreases substantially with decreasing reactor size. Equally, in larger plants removing the equipment may not be practical. Isolation of a reactor can only take

place between relatively cold locations where valves can be used. This implies that, for example, where a plant includes a syngas cooler, it has to be taken into account in the cost of sparing. Under such a situation, an operating strategy of keeping the spare reactor on hot standby and starting it prior to any planned refractory or feed injector repairs can be developed. This is the strategy employed by Eastman, and is a key to their excellent reliability performance (Hrivnak, 2001). Nonetheless, this reliability has to be matched by equally high reliability in the single-train oxygen supply and the gas treatment units to enable the benefits of the spare reactor to be realized.

Operation and maintenance. An additional key to achieving a high availability with a gasification plant is a high level of attention to detail regarding O&M activities (Hrivnak, 2001).

9.2 ENVIRONMENTAL ISSUES

It is difficult to write much about the environment without risking becoming involved in political arguments. Although there is no attempt anywhere in this book to disguise the authors' views on energy policy matters, it is not the purpose of this book to propagate such views. This book is being written far more to convey the basic facts about gasification, so that readers may develop their own ideas from those facts or use them in the shaping of a gasification project, should they already be involved in one.

Every country and many provinces or states have their own environmental regulations, so that no general guidelines can be formulated which have universal application in detail. Furthermore regulations are updated on a regular basis so that a book such as this will inevitably be outdated before its appearance. Most of the text from the first edition has therefore been retained, and updating of this section has been limited to those items where technical, rather than regulatory developments have made this necessary.

Most environmental legislation can be grouped by the phase from which the pollutants have to be removed – gaseous, liquid or solid. This section on the environmental impact of a gasification project will be grouped along the same lines.

9.2.1 Gaseous effluents

The principal gaseous effluents arising from the use of fossil fuels are oxides of sulfur and nitrogen and particulate matter. Others that require attention are not fully-combusted components, such as carbon monoxide and unburned hydrocarbons.

In gasification systems the first three components are all removed in the intermediate fuel gas, where sulfur and nitrogen are present as reduced species under high pressure and in higher concentrations than would be the case in flue gas, where they are diluted by large quantities of molecular nitrogen. All these features make

removal of these species to low levels easier. In a comparison with ultrasupercritical PC technology using SCR and wet FGD, O'Keefe shows that an IGCC power plant can achieve significantly lower emissions than the equivalent PC unit (Figure 9.4). In reality, his figures do not disclose the potential in the IGCC for further reductions should it be required. Recent permit applications for IGCC power plants have shown lower values than these on NO_x, and substantially better on SO_x (Jenkins, 2007).

The United States air pollution regulations are, at the time of writing, in a state of flux while the Clear Skies Initiative is being debated. Under the proposals made in the draft legislation, a coal gasification-based IGCC would clearly fall under the same regulations as for any other coal-based technology – a situation that, at least as far as NO_x is concerned, is currently the subject of different legal interpretations. The national limits proposed are contained in Table 9.4.

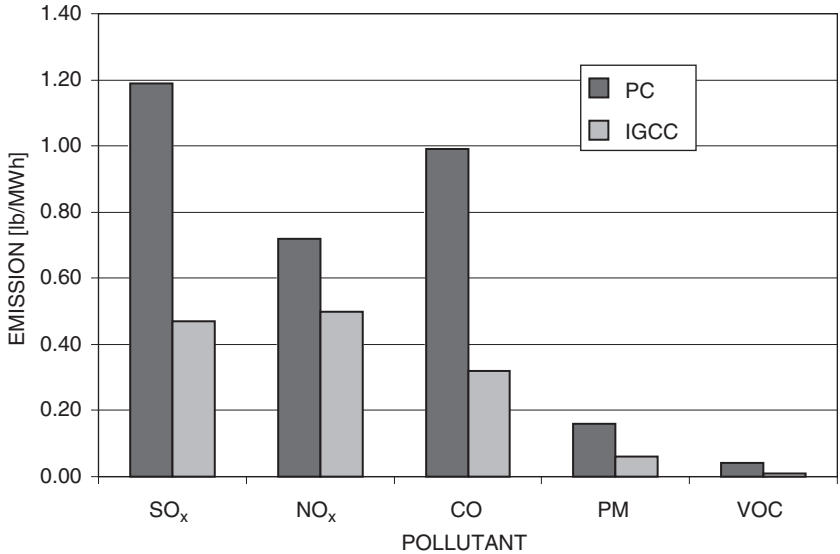

Figure 9.4 Comparison of emissions from IGCC and PC power plants (source: O'Keefe and Sturm, 2002).

Table 9.4
Emissions limits in US Clear Skies initiative

Pollutant	Emission limit	
Sulfur dioxide	2.0	lb/MWh
Nitrogen oxides	1.0	lb/MWh
Particulate matter	0.20	lb/MWh
Mercury	0.015	lb/GWh

German legislative limits for large liquid-feed power plants, which are largely drawn from European legislation, are shown in Table 9.5 with the comparison of values achievable from a residual oil-based IGCC.

Sulfur emissions

Sulfur compounds have historically received most attention when it comes to environmental impact because they are the major cause of acid rain. The fact that it is so much easier to remove sulfur as H_2S from high-pressure fuel gas was an important factor motivating the development of gasification-based power stations and the IGCC concept.

When serious interest in IGCC developed around 1980, it was already possible to remove 99% of the sulfur in an IGCC-based station. In fact, the technology for sulfur removal at orders of magnitude lower than this had already been operating reliably in commercial situations for many years, whether downstream of coal gasifiers (such as Sasol) or of oil gasifiers (in, for example, ammonia plants). In comparison, state-of-the-art sulfur removal in a conventional power station was only 85–90%.

This situation has since changed somewhat, and 98–99% sulfur removal can now also be obtained in conventional power stations with two-stage flue gas scrubbing. Dry processes can achieve over 99.5% sulfur removal. Nonetheless, it remains true that desulfurization of fuel gas can be achieved to any level desirable with proven technology.

The first complication encountered with the removal of sulfur from the fuel gas is that it appears that 4–7% of the sulfur is not present as H_2S in the gas but as COS. This means that in order to obtain 99% sulfur removal, in almost all cases the COS has first to be converted into H_2S in a catalytic conversion process – implying a fixed catalyst bed in the main gas stream.

For chemical applications, such as methanol production, the sulfur levels in the syngas can be reduced to below 100 ppbv, which translates into some 10–12 ppbv in the flue gas, or less than 0.001 lb SO_2/MWh. This is two orders of magnitude less than current expectations, as shown in Figure 9.4. Given today's regulations, this is

Table 9.5
Emission limits and oil-based IGCC performance

Pollutant		Emission limits	Oil-IGCC	Regulation
Flue gas				
SO_x	mg SO_2/m^3	400	20–40	13. BImSchV
Sulfur recovery (%)		85	99.6–99.8	13. BImSchV
NO_x	mg NO_2/m^3	150	60–150	Umweltminister Konferenz 5.4.84
Particulates	(mg/m³)	50	<0.5	13. BImSchV

Source: Higman, 1990.

more costly than necessary for power production; however, it is an indication that gasification-based technology is ready to meet the tougher standards of the future.

Nitrogen

An important feature of coal as a fuel is its high organic nitrogen content of 1–2 wt%. Upon combustion a significant part of this nitrogen is oxidized to NO_x, which must be removed from the flue gas in an SCR unit, where it is catalytically reduced with NH_3 to elemental nitrogen.

In gasification virtually no NO_x is formed, but the organic fuel nitrogen is partially converted into HCN and NH_3 in the gasifier. These components are removed in a water wash or – in the case of HCN – by catalytic conversion to NH_3 together with the COS. The gas combusted in the gas turbine is thus essentially free of any nitrogen compounds except molecular nitrogen. NO_x from the gas turbine is therefore limited to thermal NO_x. Current burner designs are capable of values as low as 15 ppmv NO_x when firing syngas (Jones and Shilling, 2002). Individual units are reported as having single-figure NO_x emissions (Hannemann *et al.*, 2002). Should lower values be required, then it would be necessary to add an SCR. While such a demand would appear illogical, since the IGCC without SCR can already achieve better results than any other coal-fired technology, some plants currently in the permitting process have included the SCR. But note that if SCR needs to be applied, then the allowable sulfur slip would have to be reduced further (see Chapter 7).

Mercury

Mercury is an element that is present in coals in very differing amounts, and is difficult to remove. The risk to engineering materials and downstream plant equipment is described in section 6.9.9.

Mercury emissions to the atmosphere, particularly from conventional coal-fired power plants, are causing increasing concern. In the United States they are now subject to the 2005 Clean Air Mercury Rule, under which the mercury emissions are limited to 0.0025 ng/J (0.2 lb/GWh) on an output basis. Depending on the heat rate of the overall power plant, this equates to about 15 μg/Nm³ in the syngas.

One of the difficulties with mercury capture from flue gas streams is the uncertainty about the distribution of the various species. In addition to elemental mercury vapor, it can exist in flue gas as an oxide, a chloride, sulfide or sulfate, the proportions depending on the levels of other contaminants in the coal. Thus, not every mercury-capture technology is suitable for every fuel.

The IGCC concept has a natural advantage over conventional combustion technologies in the removal of mercury. Removal to over 90% from synthesis gas has been demonstrated at Eastman Chemical Company's coal-to-chemicals facility in Kingsport, Tennessee, since 1983, using technology developed and used as standard for natural gas applications (Trapp, 2001). In fact, only difficulties with measurement in the ppb range have prevented a determination whether or not even higher removal efficiencies

are achieved. Certainly, no product contamination has ever been detected. Against this is the continued recognition that "no single technology has been proven that can uniformly control mercury from power plant flue gas emissions in a cost-effective manner" (US Department of Energy, 2003). In an investigation into the costs of mercury removal from flue gas, EPRI estimated the costs of 90% sulfur removal at US$2.80–3.30 per MWh (Chang and Offen, 2001). Rutkowski and colleagues (2002) have compared this with the application of sulfur-impregnated activated carbon beds, as in the Eastman plant, to a 250 MW_e IGCC configuration. The resulting cost obtained was US$0.254 per MWh. Substantial reductions to the figures for mercury removal from flue gas have in the meanwhile been achieved, so that caution should be applied, when quoting the comparison.

An additional aspect to consider is the clear destination of the mercury on removal from syngas with activated carbon, whereas research is still in progress to determine the fate of mercury removed from flue gas by various techniques. In conventional coal-fired power stations equipped with flue gas scrubbing, there is concern that mercury may end up in the gypsum wallboard, Portland cement or manufactured aggregates that are produced. This issue is being addressed in leachability studies on a broad range of solid by-products and wastes (Schwalb *et al.*, 2002). Final clarity on this issue is, however, unlikely until commercial introduction of mercury capture.

Arsenic

Arsenic is currently not regulated as an emission, although there is increasing concern about it. Arsenic is only present in coals, and mainly in those coals that have a high pyrite content. Under reducing conditions, compounds of arsenic are volatile and are contained in the gas stream from slagging gasifiers. When fuel gas treating is applied, some arsenic compounds may eventually gather in the water treatment plant and end up in the settler/filter cake of the flocculation section, which has to be considered as chemical waste. Small amounts can also reach the gas turbine, where they are oxidized and can leave traces in the machine. This requires additional precautions during maintenance activities. Alternatively, where raw gas shift is applied it will deposit on the catalyst. In the case of flue gas treating, the non-volatile As_2O_3 will deposit in any filter or end up in the gypsum.

9.2.2 Greenhouse gases

Carbondioxide

The immediate and apparent effects that sulfur and particulate matter have on human health, and SO_x and NO_x have on the world around us (forests dying from acid rain) have provided strong motivation for the substantial progress that has been made in reducing these emissions from both the power and the transport sectors. In contrast, the potential damage of CO_2 emissions is a long-term issue of which the mechanisms are not fully understood, and this has led to the fact that no clear strategy

has emerged to counter the problem, despite intensive debate over the last 10–15 years. Nonetheless, there is no disputing the correlations between global average temperatures and atmospheric CO_2 concentrations (as determined from Antarctic ice cores) over hundreds of thousands of years, and between anthropogenic emissions and atmospheric CO_2 concentrations over the last 250 years (Figure 9.5). Whether we understand the mechanisms in detail or not, it is thus certainly wise to take measures to reduce man-made contributions to global warming.

Before discussing what place gasification could have in any such strategy for CO_2 emissions reduction, it may be useful to have a look at the overall greenhouse gas effect related to the use of fossil fuels.

As can be seen from Figure 9.6, the two biggest contributors to CO_2 emissions are the electric power and transport sectors. Given the millions of small moving emission sources involved in transport, any significant reduction in CO_2 emissions is only likely to emerge through the change to a less carbon-intensive fuel, such as natural gas or hydrogen. While the use of natural gas (at least while it lasts) would still result in large (although lower) emissions from millions of individual sources, the use of hydrogen

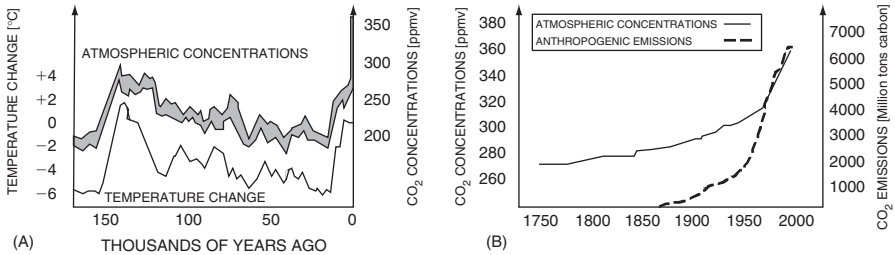

Figure 9.5 (a) Correlation between atmospheric CO_2 concentration and temperature (source: Simbeck, 2002); (b) Correlation between anthropogenic CO_2 emissions and atmospheric CO_2 concentrations (source: US Oak Ridge National Laboratory).

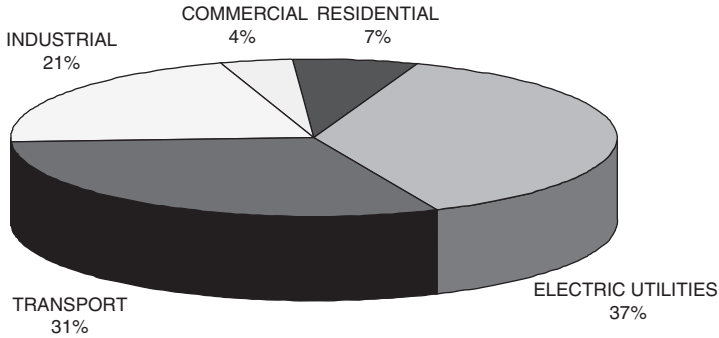

Figure 9.6 Share of US CO_2 emissions by sector (source: EPA, 2002).

offers the possibility of bundling CO_2 emissions at fixed locations in a manner that would allow fixation or sequestration. Further discussion of this aspect is discussed below, after first looking at the largest CO_2 emitter – the power sector.

A major contribution to lowering CO_2 emissions in the power industry could be realized almost immediately simply by increasing the efficiency of the power park. Replacement of a 30-year-old coal-fired unit operating at, for example, 32% efficiency by a modern plant (whether with IGCC or ultrasupercritical PC technology) using the same fuel with an efficiency of 43% would drop the CO_2 emissions per produced kilowatt-hour by 25%. The barriers here are not of a technological but of a financial nature, given the limited capital and incentive for such replacement projects. Again, the reductions offered by co-generation (or combined heat and power), although ultimately limited by the available heat sinks, face at present financial rather than technical hurdles.

Beyond the above, serious consideration is now being given to recovery of the CO_2 from the energy conversion process and putting it to use or simply sequestering it. In such a scenario, there are some natural advantages to gasification over combustion technologies. In fact, CO_2 capture and usage is already standard practice in almost all gasification-based ammonia plants, where the CO_2 is recovered from the synthesis gas and used at high pressure to manufacture urea.

Another example of CO_2 recovery from a coal gasification plant is the Great Plains SNG plant, which sells CO_2 for enhanced oil recovery (EOR) in the Weyburn field in Canada. EOR is particularly attractive for CO_2 usage in that, besides the avoidance of adding to atmospheric CO_2, it provides a means of extending the life of existing energy resources. EOR has been practiced in the Permian basin oil fields in Texas for over 30 years, although much of the CO_2 used comes from natural underground CO_2 reservoirs and therefore does not, as such, contribute to greenhouse gas abatement. Nonetheless, it points the way to one potential route for sequestration. Other alternatives have been or are being investigated as well, such as sequestration in underground saline aquifers (e.g. Statoil's Sleipner project in the North Sea), storage in coal seams and others (Beecy, 2002; White, 2002).

As mentioned above, gasification-based processes have a natural advantage over combustion technologies when it comes to CO_2 capture. Details of implementation in a power plant scenario can be found in section 7.3.3. In one study based on using gasification with total water quench technology at 80 bar, the addition of CO_2 capture was shown to add only a small increment on capital costs (about 5%) and an efficiency penalty of only 2% (O'Keefe and Sturm, 2002).

This should be compared with the impact of CO_2 capture on an ultrasupercritical PC combustion technology power block. This is extremely heavy, even assuming the prior existence of FGD and SCR flue gas treatment, which is a prerequisite for CO_2 recovery from the flue gas, for which at present amine scrubbing is universally proposed. The key fact is that the volume of gas from which the CO_2 has to be extracted is, in the case of combustion technology, 150–200 times larger than is the case in an IGCC plant. The add-on capital cost has variously been estimated at between 60% and 80%. The steam requirement for amine regeneration is lost to the final turbine stages, and this causes a drop in efficiency of some 9.5–14 percentage

points (Koss *et al.*, 2002; Simbeck, 2002). Improvements in post-combustion capture, such as the use of chilled ammonia, may reduce this in the future.

Clearly there is an incentive to find some use for the CO_2 and "recycle" it. Although there may be local markets where this is possible on a small scale, a review of the data in Table 9.6 show that the "chemical" scope for such a solution on a global scale is very limited. Apart from oxygen and hydrogen, there are no potential reactants with relative mass flows approaching that of carbon. Even iron usage is an order of magnitude smaller. It is further observed that the only mass flow in the world that is of the same order of magnitude as fossil fuels is waste biomass flow (though this is not valid for the energy content, which is an order of magnitude less) (Shell, 2002).

The only major application of waste CO_2 is for the enhanced recovery of oil and gas, but most of the CO_2 will have to be sequestered underground in depleted gas fields and aquifers, and in deep-sea basins (van der Burgt *et al.*, 1992).

An alternative option for removing CO_2 from flue gases from power stations that has been proposed is combustion with pure oxygen. The flue gas will then contain only water and CO_2 and, in the case of coal and heavy oil fractions, also SO_2, NO_x and other contaminants such as mercury. The advantage is that in this case all contaminants can be sequestered together and, apart from the ASU, no gas separations are required. However, with the present cryogenic separation of air this solution is unlikely to become attractive for both economic and efficiency reasons. Moreover, in the case of CC power stations this route would require the development of gas turbines that can handle pure tri-atomic gases.

It should be noted that the IGCC variant provides a source of hydrogen that, with a combination of membrane and PSA technologies, can be extracted during periods

Table 9.6
Important relative mass flows in the world

	Tonne/y	Relative mass
Fossil fuels	10×10^9	100
Carbon	8×10^9	80
CO_2 emission	30×10^9	300
Chemicals	3×10^8	3
Ceramic building materials	$10–15 \times 10^8$	10–15
Iron	5×10^8	5
Carbon for iron ore reduction	3×10^8	3
Carbon for SiO_2 reduction, 100,000 MW_e peak/year new installed (1 mm thick wafers)	1×10^6	0.01
*Waste biomass	$5–10 \times 10^9$	50–100

**Source*: Shell, 2002.

of low electric power demand and stored for onward sale to the transport sector. The importance of this possibility is discussed further in Chapter 10.

Methane

On a mole-for-mole basis, methane contributes 20–25 times more to the greenhouse effect than does CO_2. Anthropogenic methane from fossil sources enters the atmosphere in the form of vented or incompletely combusted associated gas, leaks in natural gas pipelines, and methane emissions related to coal mining. The ventilation air leaving deep coalmines contains about 0.5 vol% methane. This gas has the same greenhouse effect as the flue gas from a natural gas fired CC power station using a similar quantity of methane-free combustion air. Using such ventilation mine gas as combustion air in an IGCC would make it greenhouse gas neutral.

The largest source of methane emissions resulting from fossil fuel production and refining is caused by venting associated gas. On average, about 10% of the energy leaving an oil well is in the form of associated gas and, assuming that 5% of this gas is not combusted either because people do not want to see flares or because flares are not working properly, it is conservatively estimated that about 8% of the greenhouse gas effect related to the use of crude oil is due to methane emissions during production. Adding to this the effect of the CO_2 from the 95% of the associated gas that is properly combusted in operating flares, this figure increases to 15%. Schaub and Unruh (2002) have estimated that the quantity of associated gas flared in Nigeria alone would be sufficient to supply 30% of Germany's natural gas supply. Clearly there is potential here for a reduction in greenhouse gas emissions, to which synfuels production via partial oxidation of the gas and subsequent Fischer-Tropsch synthesis could make a significant contribution. Global application of such a solution could reduce the 15% of the greenhouse gas effect related to crude oil to about 2–3%.

9.2.3 Liquid effluents

Whether a gasification complex is a net water consumer or producer will depend on the feedstock and the downstream operation. In general, when coal or petroleum residues are used as feedstock there is always a net consumption of water, whereas with natural gas-based plants there can be a net production of water. Similarly, the application, chemicals or power will have an influence over the overall water balance of the plant.

Most gasification plants have a water wash at some part of the syngas treatment. For coal gasifiers its main purpose is to remove ammonia and chlorides, though many other constituents of the gas are also captured. Whether this process water is acidic or basic will depend on the amounts of nitrogen and chlorine in the coal. Whatever the pH of this water, it will almost certainly require adjustment during the flocculation step of the overall water treatment. In oil gasification plants the main objective is removal of soot, but the water also contains ammonia, hydrogen cyanide and H_2S.

In practice, with appropriate design, an IGCC can be made with zero liquid discharge, whether using a dry feed technology as in Buggenum (Coste *et al*., 1993) or slurry feed as in Polk (US Department of Energy, 2000). In both these plants, the final water treatment stage is a brine concentration and evaporation unit producing a solid waste salt.

Oil gasification units generally do not recycle the excess process water. In those applications where the plant is located in a refinery, the water treatment is generally integrated into that of the overall refinery after ammonia, HCN and H_2S have been removed in a sour water stripper. Typical emission limits and performance for a stand-alone plant are given in Table 9.7.

Specific aspects of water treatment are addressed in the following sections.

Fluorine

Fluorine in the gas will dissolve in the wastewater from the water wash, from which it can be removed by adding calcium ions that will precipitate the fluorine as CaF_2. This salt will eventually end up in the same settler/filter cake as the heavy metal-containing precipitate from the flocculation unit.

Cyanide and cyanometallates

A significant portion of the HCN produced in the gasifier is contained in process condensate. In a plant gasifying heavy oil, the excess water from the gasification section is usually stripped to remove free ammonia, H_2S and HCN. Typically, residual HCN values of 10–20 mg/l can be achieved in a single-stage stripper. The residual HCN can be reduced to below 1 ppm in a biological treatment unit.

An alternative approach to cyanide and cyanometallates is to oxidize them. This is particularly appropriate when recycling all the process condensate for a zero-discharge system. Although aeration in a closed vessel is possible and has been employed, the required contact times are long, requiring large volumes. A more economic approach is the use of ozone as oxidant, since this reacts rapidly with the cyanides (Coste *et al*., 1993).

Table 9.7
Emission limits and oil-based IGCC performance

Pollutant		Emission limits	Oil-IGCC	Regulation
Vanadium	mg/l	2	<2	City of Hamburg
Nickel	mg/l	0.5	<0.5	Rahmen Abwasser VwV 1992
BOD_5	mg/l	25	<20	Rahmen Abwasser VwV 1992

Source: Higman, 1990.

Heavy metals precipitation

Whether gasifying coal or heavy residues, there are heavy metals contained in the process condensate. Typically, these are subjected to flocculation and precipitation. The choice of flocking agent is determined by the metals to be removed, but is typically ferric chloride. The metals' sludge from the precipitation stage is then thickened prior to filtration.

The excess water so treated would be "free of fluorides, cyanides and heavy metals and contain only dissolved soluble salts" (Coste *et al*., 1993). Sand filtration may be required to remove traces of metal hydroxides from the flocking step.

9.2.4 Solid effluents

Solid effluents from gasification plants are essentially related to the ash in the feedstock, the quantities of which can vary from as much as 40 wt% in some coals to under 1 wt% for petroleum feeds. In many cases, gasification plants are able to make the solid residue available in a form that can be used as a raw material in other industries.

In contrast to a PC boiler, there is no FGD sludge or gypsum disposal problem because the sulfur is all captured as elemental sulfur in the Claus plant. At present this is a saleable product, although it is important to be aware that, were a large part of the power industry to switch to gasification-based processes, this, together with increasing sulfur production from oil refineries, would oversaturate the market. Nonetheless, even in this case the amounts of material would be substantially smaller than with gypsum.

Dry coal ash

Dry ash from non-slagging gasifiers is essentially the same material as the product of a PC boiler processing the same feed. This ash can often be utilized in the cement or building industry. If this option is not available due to the nature of the ash or to transport problems, the ash can become a major environmental liability that can be aggravated if the ash is leachable or caustic in nature. The ash is then often stored in large ponds, which has become more and more unacceptable. This problem can be largely avoided by selecting a slagging gasifier from which the quantity of dry ash waste is one to two orders of magnitude lower than from a dry ash gasifier.

Slag

Slagging gasifiers have in general an advantage over dry ash processes in that most of the ash components leave the gasifier as molten slag, which on being quenched turns into a fine inert gritty material that can be used as a replacement for, for example, sand and aggregate in concrete. van Liere and colleagues (1993) give the

particle size of water-quenched slag as being about 78–80% in the range 0.5–4 mm in a paper in which they describe usage trials in Dutch road construction. Data from Geertsma *et al*. (2002) generally support this size data for the actual slag component, although the actual material analyzed contained considerable quantities of unreacted carbon, which after separation were recycled to the gasifier or used as fuel in a PC boiler. They report the slag as being used for blasting grit and roofing granules. Amik and Dowd (2001) provide an analysis for slag produced at the Wabash River plant (Table 9.8), which essentially mirrors the ash content of the coal used. The slag contains trace metals such as lead, arsenic, selenium, chrome, antimony, zinc, vanadium and nickel, which are captured in the non-leachable glassy matrix. The results of some leachability tests are included in the paper. They report marketing for asphalt, construction backfill and landfill cover applications.

Heavy metals

The nature of any heavy metals leaving the plant as a solid effluent will depend heavily on the feedstock. With a coal feed, most heavy metals will end up in the slag or fly ash of a gasifier. Heavy metals that are not removed together with the fly ash and slag will eventually end up in the waste water from the water wash. As described on page 386, the heavy metals are removed from the water as a filter cake after treatment by flocculation and precipitation. With coal feeds, this filter cake may contain such elements as arsenic, antimony or selenium. Unlike the slag, this concentrate is not inert and has to be considered as chemical waste.

In the case of oil feeds, the main heavy metals are vanadium, nickel and iron. There are a number of processes available for recovering the ash for use in the metallurgical industry (see section 5.4). The economics of such processes depend very much on the vanadium content in the ash.

Table 9.8
Slag analysis

SiO_2	51.8%
Al_2O_3	18.7%
TiO_2	0.9%
Fe_2O_3	20.3%
CaO	4.2%
MgO	0.8%
Na_2O	1.0%
K_2O	1.9%

Source: Amik and Dowd, 2001.

Salt

All coal gasifiers will have dissolved salt in the treated wastewater. When this water cannot be disposed of, it has to be evaporated and a salt mix is then obtained that consists of over 98% NaCl. This salt is often not suitable as road salt, and may have to be considered as chemical waste.

9.2.5 Waste gasification

For reasons that are mostly historical, emissions regulations for thermal treatment of waste are generally much more stringent than for, say, coal-based power plant. Waste gasification plants, particularly slagging units, have the potential to provide a viable alternative to incineration. The recent decision in the United States to remove refinery wastes that are processed to syngas from the hazardous classification is, however, typical of the moving targets in this field. A number of plants, such as Schwarze Pumpe, provide a local or regional waste disposal center in which waste is gasified and the syngas used for production of methanol and electricity. Here, the solid slag is non-leachable and meets the German municipal waste standards "Siedlungsabfall Class 1" (Greil *et al*., 2002).

9.3 SAFETY

Issues of safety are associated with practically all industrial technologies, and understanding the appropriate measures for safety management is an important part of understanding the technology itself. In this respect, gasification is no different from many other technologies. The purpose of this section is to make those unfamiliar with gasification aware of those issues that may be considered specific to the technology. It is certainly no substitute for a project-specific safety manual, and does not address issues common to any large-scale industrial plant. It does, however, point to other sources that may help readers to develop their own ideas for a particular project in more detail.

Gasification plants are complex plants that produce a high-pressure toxic gas that is inflammable or even explosive in the presence of oxygen and an ignition source. Furthermore, the presence of pure oxygen, as is the case in most gasification processes, requires additional precautions. Generally, all these dangers are well taken care of in the process designs. Handled correctly during construction, operation, and maintenance, they pose no more problems to personnel or environment than many other industrial plants. This does however place a premium on training operations and maintenance staff, introducing concepts such as Hazop reviews, Process Safety Management and others, which are common in the chemical industry, but may be new in a power plant environment.

9.3.1 Start-up

One of the potentially dangerous moments during start-up is the ignition of the coal or oil burners. The procedure is much more complex than in regular atmospheric pressure furnaces, as ultimately the burners have to work at pressures ranging from 20–70 bar, and there are no burners that can operate properly over this whole pressure range. Where membrane walls are used, which cool very quickly in the absence of a flame, start-up burners have to be used to cover part of this pressure range. This is easier with a refractory lining, which can maintain a temperature above the fuel ignition temperature, while exchanging a heat-up burner for the operations burner. In either case and at all times, the situation should be avoided in which a mixture of a combustible gas and oxygen is present in the reactor. In most modern facilities these procedures are automated and controlled by a PLC. This eases the load on the operator and reduces the chance for human error.

9.3.2 Shutdown

Gasifier shutdown procedures are also generally automated. Shutdown steps usually include shutting off the supply of reactants, depressurizing the system and purging with nitrogen to remove any remaining synthesis gas. Purging serves a number of purposes. It eliminates any potential source of flammable or toxic gases. For an extended shutdown, nitrogen blanketing also serves as an anti-corrosion measure.

When repairs have to be carried out inside the gasifier, it is important to ensure that there are no other gases than air present. Drawing a good vacuum and breaking this with air is the best way to make sure that only air is present. This operation may have to be repeated several times to ensure that all noxious gases are removed from insulating materials, bricks, and dead ends in the plant. Even with all these precautions, air masks may be required under certain conditions.

9.3.3 Spontaneous combustion

As in a conventional PC power plant, safety precautions in coal storage and handling are essential to avoid spontaneous combustion. This applies equally well to other feedstocks, such as biomass and certain types of waste. The key in particular is to prevent fines from drying out, so that a first-in-first-out inventory policy must be part of the safety procedures.

Besides the fuel itself, there are other potential sources of spontaneous combustion. Particular attention must be paid to FeS, which may form as a product of corrosion. Another potential source is incorrect handling of catalysts – particularly unloading spent catalyst, which may not have been adequately oxidized *in situ*. Acting in strict accordance with the catalyst vendors' procedures is important.

9.3.4 Toxic and asphyxiating materials

Apart from the main syngas component, carbon monoxide, there are many other toxic gases present in a gasification complex, particularly if the end product is a chemical. Typical toxic gases present in synthesis gas can include compounds such as H_2S and COS, as well as ammonia and HCN. The design of a plant must take account of this, and personnel must be trained in their safe handling. There are many public sources of safety information available on material safety data sheets. Many of these are available from Internet sources such as www.ilpi.com/msds, which has links to many international source sites. An up-to-date set of safety data sheets should always be available with the safety officer or other member of staff responsible for safety training.

Nitrogen

It may come as a surprise, but a large proportion of the accidents occurring in gasification plants are due to nitrogen that is produced as a (by-)product from oxygen plant and used for blanketing and transport of coal, and in IGCC plants as a diluent for the fuel gas.

The problem with nitrogen is that, in contrast to raw syngas, it has no smell and therefore gives no warning and, even more problematic, it leads very quickly to unconsciousness. Good ventilation of the plant is a vital measure, and for this reason many designers prefer an open-air layout. Building a gasifier inside a closed structure requires additional precautions, not only because of the nitrogen, but also because of other toxic or flammable gases present, such as H_2, CO, H_2S, COS, HCN and NH_3. Where enclosing the plant is absolutely necessary, such as in locations with extreme climates, then it is best is to have louver walls and roof vents that guarantee good ventilation with natural circulation.

CO_2

Where concentrated CO_2 streams are present, it is important to be aware of its asphyxiating properties and the fact that it is heavier than air. Sub-grade drain pits and the like are typical locations where CO_2 can accumulate, and should not be entered by plant personnel without suitable precautions. The potential danger is not only because of leaks and open valves; also, the gas in the stacks through which the CO_2 is vented should have sufficient buoyancy by ensuring elevated temperatures. For all large quantities, dispersion calculations should be made.

9.3.5 Oxygen

Oxygen makes up about 21% of our atmosphere, and is essential to life. It is also an essential ingredient for combustion, in which fuels are oxidized in an extremely

exothermic reaction. If oxygen is present in concentrations significantly above 21% then the combustion becomes much more vigorous, and materials (such as metals) that normally oxidize in a slow manner without fire risk (e.g. rusting of iron) can behave as fuels for fire. When handling oxygen it is therefore essential to take the necessary precautions to prevent oxygen fires (Schmidt *et al.*, 2001).

The precautions necessary for safe operation of oxygen systems are well codified. Not only do all the leading industrial gas supply companies and gasification technology suppliers have their own strict safety regulations, but also trade associations such as the Compressed Gas Association (CGA), the British Compressed Gas Association (BCGA), and the European Industrial Gas Association (EIGA), in which these companies and other major operators of oxygen systems are represented, publish codes of practice based on the joint experience of all their members (see, for example, CGA, 1996; EIGA, 2001). Where carbon capture and storage is proposed additional safety issues need consideration. Experience in handling the very large quantities of supercritical CO_2 is limited and guidelines for design, operation and emergency response need development (Brown, 2007). Issues connected with trace components in the CO_2 in pipelines need addressing. Elimination of any water is required to eliminate the corrosion risk in all cases. Another corrosion risk currently being investigated is caused by the presence of SO_2 (for the flue gas capture case). There is at present no consensus on the allowable concentration of H_2S in CO_2. Some existing pipelines specify 25 ppmv max, while the Weyburn pipeline carries over 1% H_2S. A detailed risk assessment including the H_2S issue has been prepared for the FutureGen project (US Department of Energy, 2007b).

Many substances such as oils and grease will combust spontaneously in the presence of pure oxygen. The energy of impact of small particles on many metals is sufficient to cause ignition. Fires initiated by both these causes are sufficient to ignite the primary material of construction. The principle means of combating these dangers lies in meticulous cleaning of the system prior to the introduction of oxygen. All safety guidelines for oxygen systems include recommendations for cleaning and inspection after cleaning – for example, CGA publication G-4.1.

An important aspect of safety precautions for oxygen service is material selection and system geometry. Materials are selected to keep the ignitability of the material and its capability of sustaining a fire in an oxygen atmosphere to a minimum. Typically, copper-based materials (e.g. Monel) or stainless steel are used in high-pressure non-cryogenic systems. Inside the cold box, where low temperature suitability is also a criterion and pressures are limited, aluminum is also used. For pressures up to 40 bar, carbon steel may be used. Cleaning in such applications is, however, extremely important and for this reason the authors have a preference for stainless steel on both suction and discharge side of the oxygen compressor, even when not formally required by the codes.

System geometry is also significant. Velocities in oxygen lines are generally kept low as a measure to limit the energy release on impact of any particles in the system. An additional measure to limit the ignition risk is to avoid sharp bends in piping, where turbulence can increase local velocities much above these limits. For this

reason also, much attention is required to the design of valving and piping at pressure letdown stations.

An additional approach to safety in oxygen systems is to incorporate design features that ensure that personnel are not put at risk and that any material damage in the event of a fire is kept to a minimum. This type of precaution is taken with oxygen compressors, which are enclosed by a fireproof wall. There is an extensive monitoring system, which on detection of a fire risk will cause the machine to be stopped, depressurized and flooded with nitrogen (see, for example, EIGA, 2001). The cooling water circuit for intercooling is usually a closed-circuit system to avoid any potential corrosion and subsequent leaks on the intercoolers.

An important safety aspect to consider is the quality of the air entering the air separation unit. Modern molecular sieve PPUs will generally remove heavy hydrocarbons present in the air. Cases are known where the concentration of hydrocarbons in the atmosphere increased substantially over the life of the ASU and overloaded an internal hydrocarbon filter inside the cold box, breaking through into the oxygen-rich environment of the LP column. In one case known to us, results from ethylene leakage from nearby plant were detected in time and the filter was enlarged to cope with the new air quality. In another, the mechanism was more complicated and an explosion resulted (van Hardeveld *et al*., 2001). Such incidents do, however, illustrate the need to specify the feed air quality conservatively and with an eye to future developments.

REFERENCES

Amik, P. and Dowd, R. (2001). "Environmental performance of IGCC repowering for conventional coal power plants". Paper presented at Gasification Technologies Conference, San Francisco.

Appl, M. (1999). *Ammonia: Principles & Industrial Practice*. Weinheim: Wiley-VCH.

Beecy, D. (2002). "US carbon sequestration RD&D program". Paper presented at Gasification Technologies Conference, San Francisco.

Brown, A. (2007). Supercritical carbon dioxide: major accident hazards. 8th European Gasification Conference, Antwerp.

Chang, R. and Offen, G. (2001). Mercury control options. *Modern Power Systems*, November 2001.

Clayton, S.J., Stiegel, G.J. and Wimer, J.G. (2002). *Gasification Technologies: Gasification Markets and Technologies – Present and Future: An Industry Perspective*. Washington, DC: US Department of Energy.

Compressed Gas Association. (1996). *Cleaning Equipment for Oxygen Service*. Publication G-4.1, 4th edn. Arlington: CGA.

Costa, M. (2007). Transforming American industry through alternative materials. Paper presented at Gasification Technologies Conference, San Francisco.

Coste, C., Rovel, J.M. and George, J.M. (1993). "Effluent system in view of both zero discharge and hazardous solid waste minimization". Paper presented at VGB Conference "Buggenum IGCC Demonstration Plant", Maastricht.

Electric Power Research Institute. (2007a). *Updated Cost and Performance Estimates for Clean Coal Technologies including CO_2 Capture – 2006*. Publication 1013355. Palo Alto: EPA.

Electric Power Research Institute. (2007b). *Integrated Gasification Combined Cycle (IGCC) Design Considerations for High Availability – Volume 1: Lessons from Existing Operations*, publication 1012226. Palo Alto: EPA.

European Industrial Gas Association (2001). *Centrifugal Compressors for Oxygen Service. Code of Practice*. IGC Doc 27/01/E. Brussels: EIGA.

Forte, R., Porter, F., Tavoulareas, E.S. and Ratafia-Brown, J. (2002). "Coal gasification and air emissions". Paper presented at the 19th Annual International Pittsburgh Coal Conference, Pittsburgh.

Geertsma, A., Groppo, J. and Price, C. (2002). "Demonstration of a beneficiation technology for Texaco gasifier slag." Paper presented at Gasification Technologies Conference, San Francisco.

Greil, C., Hirschfelder, J., Turna, O. and Obermeier, T. (2002). "Operating results from gasification of waste material and biomass in fixed bed and circulating fluidized bed gasifiers". Paper presented at IChemE Conference "Gasification: The Clean Choice for Carbon Management", Noordwijk.

Hannemann, F., Schiffers, U., Karg, J. and Kanaar, M. (2002). "V94.2 Buggenum experience and improved concepts for syngas application." Paper presented at Gasification Technologies Conference, San Francisco.

Higman, C.A.A. (1994). "Perspectives and experience with partial oxidation of heavy residues". Paper presented at AFTP Conference "L'Hydrogène, Maillon Essentiel du Raffinage de Demain", Paris.

Higman, C.A.A. (1995). "Methanol production by gasification of heavy residues". Paper presented at IChemE Conference "Gasification: An Alternative to Natural Gas", London.

Higman, C.A.A. and Sharma, R.K. (1998). "Gasification: an Indian perspective." Paper presented at IChemE Conference "Gasification: The Gateway to a Cleaner Future", Dresden.

Higman, C.A.A., DellaVilla, S. and Steele, R. (2006). "The reliability of integrated gasification combined cycle (IGCC) power generation units". Paper presented at 7th European Gasification Conference, Barcelona.

Holt, N.A. (2007). Preliminary economics of SCPC and IGCC with CO_2 capture and storage. Paper presented at 2nd International Freiberg Conference on IGCC and XtL Technologies, Freiberg.

Hrivnak, S. (2001). "Fine tuning to improve availability and reliability of coal based gasification." Paper presented at Gasification Technologies Conference, San Francisco.

International Energy Agency. (2003). Potential improvements in IGCC with CO_2 capture, *Report PH4/19*, IEA Greenhouse Gas R&D programme, Cheltenham.

Jenkins, S. (2007). IGCC Environmental Performance: A Review of Air Emission Rates for U.S. IGCC Projects in Development. Paper presented at Gasification Technologies Conference, San Francisco.

Jones, R.M. and Shilling, N.Z. (2002). "IGCC gas turbines for refinery applications". Paper presented at Gasification Technologies Conference, San Francisco.

Koss, U., Meyer, M. and Schlichting, H. (2002). "Zero emissions IGCC with Rectisol technology". Paper presented at Gasification Technologies Conference, San Francisco.

Laege, J. and Pontow, B. (2002). "30 years of successful operation: developments and improvements in a large-scale gasification plant". Paper presented at IChemE Conference "Gasification: the Clean Choice for Carbon Management", Noordwijk.

O'Keefe, L.F. and Sturm K.V. (2002). "Clean coal technology options: a comparison of IGCC vs pulverized coal boilers". Paper presented at Gasification Technologies Conference, San Francisco.

O'Keefe, L.F., Weissman, R.C., DePuy, R.A., Griffiths, J., East, N. and Wainwright, J.M. (2001). "A single design for variable CO_2 capture". Paper presented at Gasification Technologies Conference, San Francisco.

Ricketts, B., Hotchkiss, R, Livingston, B. and Hall, M. (2002). "Technology status review of waste/biomass co-gasification with coal". Paper presented at IChemE Conference "Gasification: The Clean Choice for Carbon Management", Noordwijk.

Rutkowski, M.D., Klett, M.G. and Maxwell, R.C. (2002). "The cost of mercury removal in an IGCC plant". Paper presented at 19th Annual International Pittsburgh Coal Conference, Pittsburgh.

Schaub, G. and Unruh, D. (2002). *Synthetische Kohlenwasserstoff-Kraftstoffe und Minderung fossiler CO_2-Emissionen*. VDI-Berichte Nr. 1704. Düsseldorf: VDI.

Schmidt, W.P., Winegardner, K.S., Dennehy, M. and Castle-Smith, H. (2001). "Safe design and operation of a cryogenic air separation unit". Paper presented at AIChE Annual Loss Prevention Symposium, Houston.

Schwalb, A.M., Withum, J.A. and Statnick, R.M. (2002). "The re-evolution of mercury from coal combustion materials and by-products". Paper presented at the 19th Annual International Pittsburgh Coal Conference, Pittsburgh.

Shell. (2002). *Venster*, November/December: 9.

Simbeck, D. (2002). "Overview of climate change policy and technical developments". Paper presented at Gasification Technologies Conference, San Francisco.

Trapp, W.L. (2001). "Eastman and gasification: the next step, building on past success". Paper presented at Gasification Technologies Conference, San Francisco.

US Department of Energy. (2000). *The Tampa Electric Integrated Gasification Combined-Cycle Project: An Update*. US DoE Topical Report No. 19. Washington, DC: US Department of Energy.

US Department of Energy, National Energy Technology Laboratory. (2007a). *Cost and Performance Baseline for Fossil Energy Power plants Study, Volume 1: Bituminous Coal and Natural Gas to Electricity*. Available at http://www.netl.doe.gov/technologies/coal-power/gasification/pubs/systems_analyses.html.

US Department of Energy, National Energy Technology Laboratory. (2007b). FutureGen Project: Final Environmental Impact Statement. Report DOE/EIS-0394. Available at http://www.netl.doe.gov/technologies/coalpower/futuregen/EIS/FG%20Risk%20Assessment%20110807.pdf, November 2007.

US Department of Energy. (2003). *Mercury Emissions Control*. Available at: www.netl.doe.gov/coalpower/environment/mercury/description.html.

US Environmental Protection Agency. (2002). *Inventory of Greenhouse Gas Emissions*. Washington, DC: US Environmental Protection Agency.

van der Burgt, M., Cantle, J. and Boutkan, V.K. (1992). Carbon dioxide disposal from coal-based IGCCs in depleted gas fields. *Energy Conversion Management*, 33(5–8): 603–610.

van Hardeveld, R.M., Groeneveld, M.J., Kehman, J.-Y. and Bull, D.C. (2001). Investigation of an air separation unit explosion. *Journal of Loss Prevention in the Process Industries*, 14: 167–180.

van Liere, J., Bakker, W.T. and Bolt, N. (1993). "Supporting research on construction materials and gasification slag". Paper presented at VGB Conference "Buggenum IGCC Demonstration Plant".

Weigner, P., Martens, F., Uhlenberg, J. and Wolff, J. (2002). "Increased flexibility of Shell gasification plant". Paper presented at IChemE Conference "Gasification: The Clean Choice for Carbon Management", Noordwijk.

White, D.J. (2000). *Gasification: The Key to a Cleaner Future*. London: Financial Times Energy.

White, D.J. (2002). "CO_2 capture and sequestration: European policy drivers". Paper presented at Gasification Technologies Conference, San Francisco.

Chapter 10

Gasification and the Future

The future of gasification is intimately intertwined with the future of energy and energy policy. It is generally recognized that human development cannot continue to base its economy on fossil fuels in the present manner for ever, even if viewpoints on the timescale do diverge – sometimes dramatically. This viewpoint is put most strongly by the advocates of what is called the "hydrogen economy". There is no doubt that the use of hydrogen in combination with fuel cells as a transport fuel will improve the microclimate of our conurbations significantly through the elimination of CO_2, NO_x, CO, hydrocarbon, and soot emissions from motor vehicles – and this is a prospect that could become reality within the next 20 years. However, it is our opinion that those proponents who present the hydrogen economy as a solution to the CO_2 emissions or "greenhouse gas" issue overstate their case. The hydrogen that we will use in our fuel cells is not ready and waiting for us to collect; it is chemically locked into other substances, the principle of which are water and, to a lesser extent, natural gas.

The issue remains, therefore, how to unlock this hydrogen and make it available in a useable form. There are essentially three routes to hydrogen production: electrolysis of water, steam reforming of natural gas, and gasification – whereby the fuel for the gasification can be anything from coal to biomass. Thus, as can be seen from Table 10.1, unless the power for electrolysis is generated without CO_2 emissions, hydrogen production is inevitably associated with CO_2 production. Furthermore, it has to be recognized that, with the possible exception of nuclear energy, no CO_2-free power-generation technology is available in the medium term that can produce hydrogen in the quantities required to supply our transport needs. We therefore need to look at the potential for a reduced CO_2 technology to help us on the way to a "no carbon" future.

It is our opinion that in the transition between fossil fuels and a fully "sustainable world", gasification can play an important role. First, in the move towards a hydrogen economy it can be expected that the hydrogen will be produced directly from

Table 10.1
CO_2 emissions for hydrogen production technologies

Technology	kg CO_2 emissions per Nm^3 H_2
Electrolysis with conventional coal combustion	2.6
Biomass gasification	1.7–2.0
Coal gasification	1.0–1.4
Steam reforming of natural gas	0.8
Electrolysis with nuclear power	0

fossil fuels rather than by electrolysis. Furthermore, during this transition period the implementation of polygeneration units producing both power and hydrogen will allow a gradual change-over from the former to the latter. This is the only way in which an investment in power generation can be utilized for hydrogen production at moderate cost (Simbeck and Chang, 2002). Secondly, gasification is a key technology for more efficient power generation from coal and heavy oils with the best environmental performance. And thirdly, gasification provides the best option for producing concentrated carbon dioxide streams that may have to be sequestered during the transition in order to reduce the emission of greenhouse gases.

Of course, the above remarks are not restricted to coal, but apply to the gasification of any fossil fuel. Furthermore, they also apply to what may in the very long term become the most important feedstocks, biomass and waste – which in a "sustainable future" may have to take over the role of today's fossil fuels.

What is seldom mentioned is that even in a "sustainable world" not only energy is required, but also carbon for organic chemicals, including plastics. Although gasification of waste may supply part of this requirement, the make-up will have to come from biomass, which in this idealized "sustainable world" model is the only allowable source of concentrated carbon (van der Burgt, 1997). The only way to produce organic chemicals from waste and biomass is first to gasify them in order to make synthesis gas. At present there is no process available to do this efficiently, as all biomass and waste gasification processes to date have been developed for producing fuel gas and power. Hence, although in a more renewable world hydrogen (by electrolysis) and electricity may be available, gasification of waste and biomass – directly or indirectly via bio-oil – are at least required to make synthesis gas for organic chemicals. The first generation of downstream technologies to allow the use of syngas (via methanol) as an alternative source for ethylene and propylene instead of conventional naphtha cracking has been demonstrated (UOP, 1997; Holtmann and Rothaemel, 2001). The first two commercial-scale coal-to-propylene plants are now under construction in China, with start-ups planned for 2008 and 2009 (Koempel and Liebner, 2007).

We therefore conclude that gasification can and will have an important role to play in the coming decades, both for power generation and for the production of bulk chemicals. In the more distant future it may also develop to become an important source of base materials for all organic chemicals. It is hoped that this book will contribute to the development of a better understanding of gasification processes and their future development.

REFERENCES

Holtmann, H.-D. and Rothaemel, M. (2001). A cost effective methanol-to-propylene route. *Petroleum Technology Quarterly*, 6(3):131–135.

Koempel, W. and Liebner, W. (2007). "Lurgi's methanol to propylene: report on a successful commercialization". Paper presented at 8th Natural Gas Conversion Symposium, Natal, Brazil.

Simbeck, D. and Chang, E. (2002). *Hydrogen Supply: Cost Estimate for Hydrogen Pathways – Scoping Analysis*. National Renewable Energy Laboratory report NREL/SR-540-32525.

UOP. (1997). *UOP/Hydro MTO Process: Methanol to Olefins Conversion*. Des Plaines, IL: UOP Company leaflet.

van der Burgt, M.J. (1997). The role of biomass as an energy carrier for the future. *Energy World*, 246. pp. 16–17

This page intentionally left blank

Appendix A

Companion Website

For those interested in following up some of the ideas expressed in this book, we have set up a website, www.gasification.higman.de, which includes both programs for typical gasification calculations and a literature data bank. The content of the website at the time of going to press of this book covers the following.

Computer programs

Gasify.exe performs calculations for gasification for coal, oil and natural gas. It is an equilibrium calculation based on the information contained in Chapter 2. There is a wide selection of calculation modes, such as fixed reactant quantities with variable gasification temperature, fixed gasification temperature with variable oxygen demand, and others.

Proxult.exe will convert proximate and ultimate coal analyses between "as received" (ar), "moisture free" (mf), "ash free" (af) and "moisture and ash free" (maf) bases, as described in section 4.1. Further, LHV and HHV on any basis may be converted into each other. In the absence of heat of combustion data, the heating value will be generated using the proximate and ultimate analyses.

Heatloss.exe will calculate the loss of heat in a membrane wall under different internal conditions (slagging/non-slagging) using the criteria described in section 6.4.

Quench.exe provides a means of back-calculating the temperature at which the CO shift reaction and the CO_2 methane reforming reaction have frozen during cooling, as described in section 6.8.

Viscos.exe estimates the viscosity of residual oil fractions, as described in section 4.2.1.

All these programs are executable files and can be downloaded for use by owners of this book. Help files include a fuller description of the theoretical background than contained in the book.

Literature data bank

The literature databank *gaslit.mdb* contains over 1000 entries on the topic of gasification, including all the literature cited in this book. It includes titles, authors and keywords for all papers presented at the Gasification Technologies Council Conferences since 1998, all the IChemE Gasification Conferences, and a number of other important sources not normally accessible to non-participants.

The database includes a keyword-based search facility, with up to six specified keywords per article. Both gasification technology and project name can be specified independently of the keyword.

A simplified version of the database in Excel format *gaslit.xls* is downloadable for those who cannot run Microsoft Access.

Legal note

The companion website will be maintained for at least 1 year after the initial publication of this book. No guarantee can be made for its continued availability thereafter. The authors have made every effort to ensure the accuracy and usability of these programs and any others that may be included on the website, but do not assume any legal liability whatsoever for the consequences of their use.

Appendix B

Conversion Factors

Mass				
kg (kilogram)	**lb (pound avdp)**	**Short ton**	**Long ton**	**Metric ton**
1	2.205	1.102×10^{-3}	9.842×10^{-4}	1×10^{-3}
0.4536	1	5×10^{-4}	4.464×10^{-4}	4.536×10^{-4}
907.6	2000	1	0.8929	0.9072
1016	2240	1.120	1	1.016
1000	2205	1.102	0.9842	1

Volume		
m^3	**ft^3**	**bbl**
1	35.31	6.290
2.832×10^{-2}	1	0.1781
0.1590	5.615	1

Power		
kW	**Mcal/day**	**Btu/h**
1	20.64	3412
4.846×10^{-2}	1	165.3
2.931×10^{-4}	6.048×10^{-3}	1

Energy or work							
J	kWh	Btu	cal	TCE, LHV	TCE, HHV	bbl OE, LHV	bbl OE, HHV
1	2.778×10^{-7}	9.478×10^{-4}	0.2388	3.413×10^{-11}	3.281×10^{-11}	1.757×10^{-10}	1.642×10^{-10}
3.600×10^{6}	1	3412	8.598×10^{5}	1.228×10^{-4}	1.181×10^{-4}	6.325×10^{-4}	5.912×10^{-4}
1055	2.931×10^{-4}	1	252.0	3.600×10^{-8}	3.461×10^{-8}	1.854×10^{-7}	1.733×10^{-7}
4.187	1.163×10^{-6}	3.968×10^{-3}	1	1.429×10^{-10}	1.374×10^{-10}	7.356×10^{-10}	6.875×10^{-10}
2.931×10^{10}	8141	2.778×10^{7}	7.000×10^{9}	1	9.615×10^{-1}	5.150	4.813
3.048×10^{10}	8467	2.889×10^{7}	7.280×10^{9}	1.040	1	5.356	5.005
5.691×10^{9}	1581	5.394×10^{6}	1.359×10^{9}	1.942×10^{-1}	1.867×10^{-1}	1	9.346×10^{-1}
6.090×10^{9}	1692	5.772×10^{6}	1.455×10^{9}	2.078×10^{-1}	1.998×10^{-1}	1.070×10^{-1}	1

Pressure						
Pa	bar	atm	lbf/in^2	mm Hg = Torr	in Hg	m water
1	1.000×10^{-5}	9.869×10^{-6}	1.450×10^{-4}	7.501×10^{-3}	2.953×10^{-4}	1.020×10^{-4}
1.000×10^{5}	1	0.9869	14.50	750.1	29.53	10.20
1.013×10^{-5}	1.013	1	14.70	760.0	29.92	10.33
6895	6.895×10^{-2}	6.805×10^{-2}	1	51.72	2.036	0.7031
133.3	1.333×10^{-3}	1.316×10^{-3}	1.934×10^{-2}	1	3.937×10^{-2}	1.360×10^{-2}
3386	3.386×10^{-2}	3.342×10^{-2}	0.4912	25.40	1	0.3453
9807	9.807×10^{-2}	9.678×10^{-2}	1.422	73.56	2.896	1

Flowrate		
m^3/h	**ft^3/min**	**bbl/day**
1	0.5886	151.0
1.699	1	256.5
6.625×10^{-3}	3.899×10^{-3}	1

Normal and standard volumes	
Nm^3	**SCF**
1	37.22
0.0269	1
Note: Nm^3 refer to 1.0132 bar and 0°C; SCF to 30 mmHg and 60°F	

Density		
g/cc	**kg/m^3**	**lb/ft^3**
1	1000	62.43
1×10^{-3}	1	6.243×10^{-2}
16.02×10^{-2}	16.02	1

Energy per unit mass		
kJ/kg	**Btu/lb**	**kcal/kg**
1	0.4299	0.2388
2.326	1	0.5556
4.187	1.800	1

Energy per unit volume		
kJ/m^3	**Btu/ft^3**	**$kcal/m^3$**
1	2.684×10^{-2}	0.2388
37.26	1	8.899
4.187	0.1124	1

Heat capacity per unit volume		
kJ/m³·°C	**Btu/ft³·°F**	**kcal/m³·°C**
1	1.491×10^{-2}	0.2388
67.06	1	16.02
4.187	6.243×10^{-2}	1

Heat capacity per unit mass		
kJ/m³·°C	**Btu/lb·°F**	**Kcal/kg.°C**
1	0.2388	0.2388
4.187	1	1
4.187	1	1

Conversion efficiency versus heat rate							
Efficiency	**Heat rate**	**Efficiency**	**Heat rate**	**Efficiency**	**Heat rate**	**Efficiency**	**Heat rate**
%	**Btu/kWh**	**%**	**Btu/kWh**	**%**	**Btu/kWh**	**%**	**Btu/kWh**
100	3412	75	4549	50	6824	25	13,648
99	3447	74	4611	49	6963	24	14,217
98	3482	73	4674	48	7109	23	14,835
97	3518	72	4739	47	7260	22	15,510
96	3554	71	4806	46	7418	21	16,248
95	3592	70	4874	45	7582	20	17,061
94	3630	69	4945	44	7755	19	17,958
93	3669	68	5018	43	7935	18	18,956
92	3709	67	5093	42	8124	17	20,071
91	3750	66	5170	41	8322	16	21,326
90	3791	65	5249	40	8530	15	22,747
89	3834	64	5331	39	8749	14	24,372
88	3877	63	5416	38	8979	13	26,247
87	3922	62	5503	37	9222	12	28,434
86	3968	61	5594	36	9478	11	31,019
85	4014	60	5687	35	9749	10	34,121
84	4062	59	5783	34	10,036	9	37,912
83	4111	58	5883	33	10,340	8	42,651
82	4161	57	5986	32	10,663	7	48,744
81	4212	56	6093	31	11,007	6	56,868
80	4265	55	6204	30	11,374	5	68,242
79	4319	54	6319	29	11,766	4	85,303
78	4374	53	6438	28	12,186	3	113,737
77	4431	52	6562	27	12,637	2	170,605
76	4490	51	6690	26	13,123	1	341,210

Conversion heat rate versus efficiency							
Heat rate	**Efficiency**	**Heat rate**	**Efficiency**	**Heat rate**	**Efficiency**	**Heat rate**	**Efficiency**
Btu/kWh	**%**	**Btu/kWh**	**%**	**Btu/kWh**	**%**	**Btu/kWh**	**%**
3412	100	7500	45.5	10,000	34.1	15,000	22.7
3500	97.5	7600	44.9	10,100	33.8	15,500	22.0
4000	85.3	7700	44.3	10,200	33.5	16,000	21.3
4500	75.8	7800	43.7	10,300	33.1	16,500	20.7
5000	68.2	7900	43.2	10,400	32.8	17,000	20.1
5500	62.0	8000	42.7	10,500	32.5	17,500	19.5
5600	60.9	8100	42.1	10,600	32.2	18,000	19.0
5700	59.9	8200	41.6	10,700	31.9	18,500	18.4
5800	58.8	8300	41.1	10,800	31.6	19,000	18.0
5900	57.8	8400	40.6	10,900	31.3	19,500	17.5
6000	56.9	8500	40.1	11,000	31.0	20,000	17.1
6100	55.9	8600	40.7	11,100	30.7	25,500	13.6
6200	55.0	8700	39.2	11,200	30.5	30,000	11.4
6300	54.2	8800	38.8	11,300	30.2	35,000	9.7
6400	53.3	8900	38.3	11,400	29.9	40,000	8.5
6500	52.5	9000	37.9	11,500	29.7	45,000	7.6
6600	51.7	9100	37.5	11,600	29.4	50,000	6.8
6700	50.9	9200	37.1	11,700	29.2	60,000	5.7
6800	50.2	9300	36.7	11,800	28.9	70,000	4.9
6900	49.5	9400	36.3	11,900	28.7	80,000	4.3
7000	48.7	9500	35.9	12,000	28.4	90,000	3.8
7100	48.1	9600	35.4	12,500	27.3	100,000	3.4
7200	47.4	9700	35.2	13,000	26.2	200,000	1.7
7300	46.7	9800	34.8	13,500	25.3	300,000	1.1
7400	46.1	9900	34.4	14,000	24.4	341,240	1.0

Care should be taken to make sure that the heat rate and efficiency are both based on the same type heating value (LHV or HHV).

Basic data			
Universal gas constant	R	8.31441	J/mol·K
Normal molar volume of an ideal gas		22.414×10^{-3}	m^3/mol
Normal temperature		273.15	K
Normal pressure		101325	Pa ($N/m^2 = kg/m{\cdot}s^2$)
Standard acceleration due to gravity		9.80665	m/s^2

This page intentionally left blank

Appendix C

Emissions Conversions

Emission conversions					
SO_2		NO_2		Particulates/SO_2/NO_2	
ppmv	mg/Nm^3	ppmv	mg/Nm^3	g/GJ	lb/MMBtu
10	29	10	21	10	0.023
20	57	20	41	20	0.047
30	86	30	62	30	0.070
40	114	40	82	40	0.093
50	143	50	103	50	0.116
60	171	60	123	60	0.140
70	200	70	144	70	0.163
80	229	80	164	80	0.186
90	257	90	185	90	0.209
100	286	100	205	100	0.233
110	314	110	226	110	0.256
120	343	120	246	120	0.279
130	372	130	267	130	0.302
140	400	140	287	140	0.326
150	429	150	308	150	0.349
160	457	160	328	160	0.372
170	486	170	349	170	0.395
180	514	180	369	180	0.419
190	543	190	390	190	0.442
200	572	200	411	200	0.465

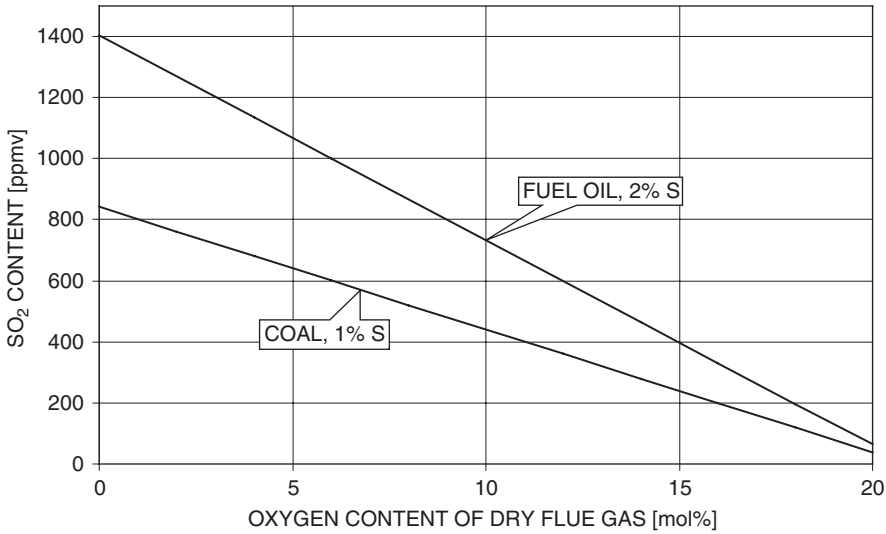

Figure C1 SO_2 content as a function of the oxygen content in dry stack gas.

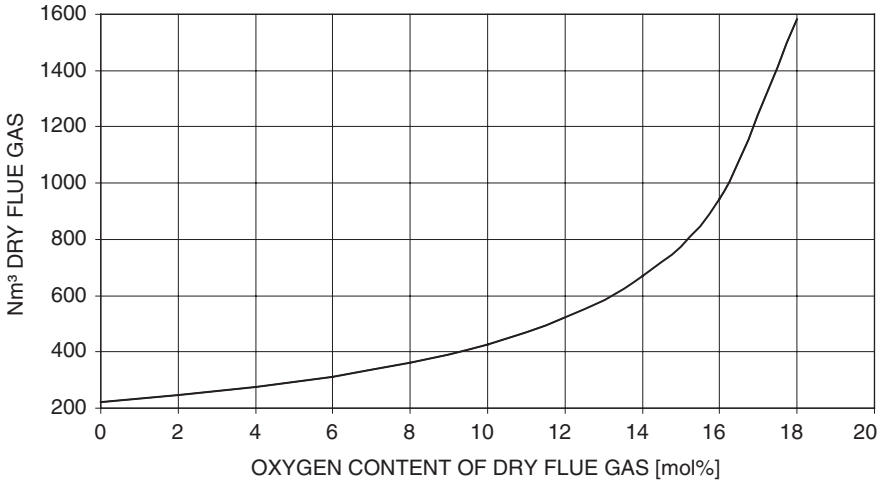

Figure C2 Nm^3 dry flue gas per GJ fuel as a function of the oxygen content.

Appendix D

Guidelines for Reporting Operating Statistics for Gasification Facilities

(courtesy of The Gasification Technologies Council, Rev. 5 February 2002)

The objective of these guidelines is to present a standardized way for reporting the operating statistics of gasification facilities. The statistics are primarily time-based; however, a single flow-based indicator is also included. An example is given.

Gasification facility units

The gasification facility is divided into two units so that the operating statistics can be reported for each of these critical areas of the facility. The units are defined as follows:

- Gasification (including ASU and acid gas removal unit)
- Product units

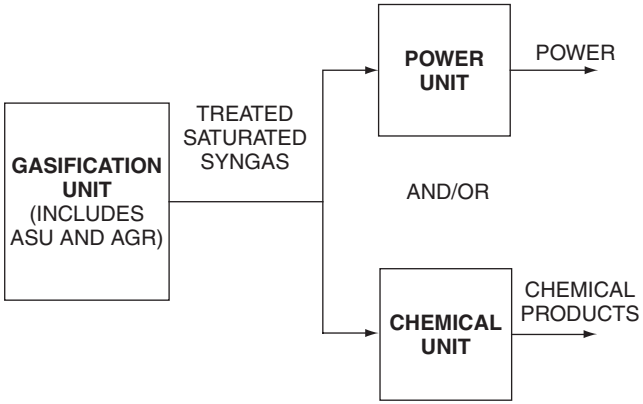

Figure D1 Gasification facility units.

- Power production block, and/or
- Chemical production block.

Authors are also asked to indicate the specific configurations of the units with regard to back-up and multiple trains.

Unit operating statistics – measured

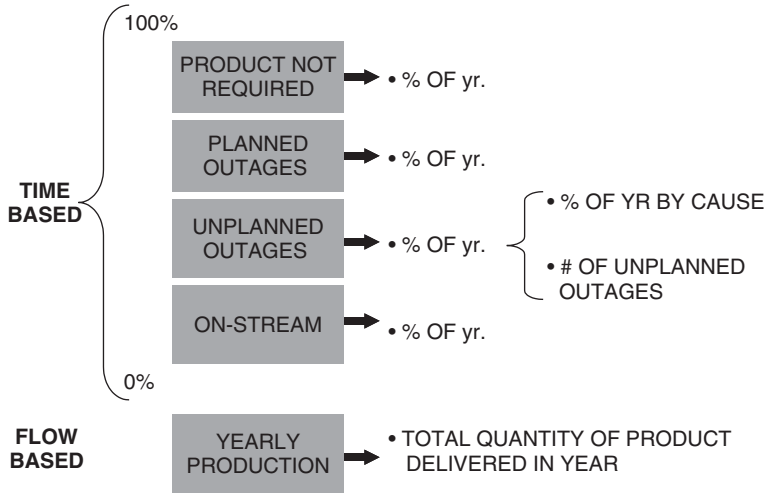

Figure D2 Unit operating statistics – measured.

Definitions – measured statistics

- Product Not Required
  - % of year that the product from the unit was not required, and therefore, the unit was not operated. The unit was generally available to run and not in a planned outage or forced outage.
- Planned Outages
  - % of the year that the unit is not operated due to outages which were scheduled at least 1 month in advance. Includes yearly planned outages as well as maintenance outages with more than 1 month's notice.
- Unplanned Outages
  - % of the year the unit was not operated due to forced outages which had less than 1 month's notice. Includes immediate outages as well as maintenance outages with less than 1 month's notice.

- On-stream
  - % of the year the unit was operating and supplying product in a quantity useful to the downstream unit or customer.
- Yearly Production
  - Defined as the total quantity of product actually delivered from the unit in a calendar year. For the gasification unit, the production is reported on the basis of total clean synthesis gas.

Unit operating statistics – calculated

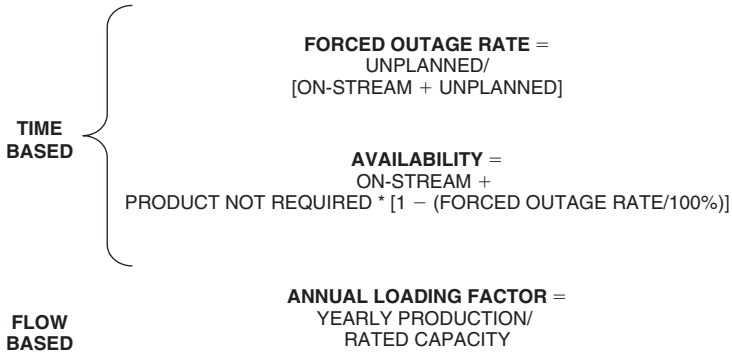

Figure D3 Unit operating statistics – calculated.

Definitions – calculated statistics

- Forced Outage Rate
  - Defined as the time during which the downstream unit or customer did not receive product due to unplanned problems divided by the time during which they expected product, expressed as a percentage.
- Availability
  - Defined as the sum of the time during which the unit was on-stream plus an estimate of the time the unit could have run when product was not required, expressed as a percentage of the year. Assumption is that unit could have operated at the same Forced Outage Rate when product was not required.
- Annual Loading Factor
  - Defined as the yearly production of the unit divided by the rated capacity, expressed as a percentage.

- Rated Capacity
  - Defined as the design quantity that the unit would produce at the design rate over the calendar year when operated in an integrated manner. Calculated by multiplying 365 times the average annual daily design rate. Note that the Design Production can change over time as the plant is de-bottlenecked or re-rated.

Example

- Operating unit is a gasification train which is designed to make 200 MMscfd of syngas
- Measured unit operating statistics for this example:
  - Product Not Required = 10% of year
  - Planned Outages = 8% of year
  - Unplanned Outages = 4% of year
    - Breakdown of the 4% by Cause
    - Report number of interruptions
  - On-stream = 78% of year
  - Yearly production = 55,000 MMscf of syngas
- Resulting calculated unit operating statistics:
  - Forced Outage Rate = 4%/{78% + 4%} = 4.9%
  - Availability = 78% + 10% × {1 − (4.9%/100%)} = 78% + 9.5% = 87.5%
  - Rated Capacity = 365 d × 200 MMscfd = 73,000 MMscf
  - Annual Loading Factor = 55,000 MMscf/73,000 MMscf = 75.3%

Appendix E

Basis for Calculations

All calculations were based on a typical internationally traded coal of which the properties are given in Table E1. All flow schemes are based on 100 kg maf coal, and the relevant mass and energy values are all based on this quantity. Taking the mass values per second, we get the energy flows in MW.

For drying the coal from 12.5% to 2% moisture, 31 MJ_{th} are required. As this heat is supposed to be supplied by burning part of the clean fuel gas, this corresponds to an energy penalty of about 19 MJ_e.

For heating the water for the optimal coal-water slurry feed gasifier to 325°C, 121 MJ_{th}/100 kg maf coal are required.

For a classical GEE gasifier, the carbon conversion has been set at 95%. In all other cases, this has been set at 99%.

The energy required for the production of oxygen was taken as 46 MJ_e/kmole. If not indicated otherwise, the purity of the oxygen is 95% mole.

For making 300°C process steam for dry coal feed gasifiers, 3 MJ_{th}/kg are required.

The heat loss from the gasifiers has been taken as 0.5% of the coal LHV for the coal-water slurry feed gasifiers, and as 2% of the coal LHV for the dry coal feed gasifiers. In the latter case, it has been assumed that this heat is available for making steam.

For all compressors and turbines, a polytropic efficiency of 90% has been assumed. For the adiabatic compression of air to 32 bar, this corresponds to 15.6 MJ_e/kmole air. For wet air compression, the energy data were 10.7 and 13.1 MJ_e/kmole wet air for compression to 32 and 64 bar respectively. For nitrogen compression, the same figures has been taken as for air compression.

For gas quenches, a recycle gas compressor is required. The energy consumption is 11 MJ_e for 100 kg maf coal intake except for the two-stage Shell gasifier, where it is only 7 MJ_e for 100 kg maf coal intake. The reason for this lower figure is the lower duty of the syngas cooler due to the lower outlet temperature of the gasifier.

In case of the Tophat cycle, corrections have been applied for the approach temperatures in the recuperator. As a standard, 25°C was taken for the temperature difference between the turbine outlet and compressor outlet. For higher temperature differences, the efficiency bonus was 1 percentage point per 25°C.

For the internal energy consumption of the power stations, 2 percentage points were assumed if no CO_2 was removed. With CO_2 removal from the fuel gas, this figure was increased to 3 percentage points. For flue gas treating the latter penalty was also used, but further increased by an additional penalty of 109 MJ_e that are required to increase in the pressure of CO_2 from the about 0.1 bar, at which it is available in the flue gas to the about 6 bar, at which it is present in the fuel gas. This figure corresponds to an additional 3 percentage points penalty in the station efficiency, bringing the total internal energy consumption for this case to 6 percentage points.

It has been further assumed that heat above 250°C can be converted into power with an efficiency of 45% by means of a steam cycle.

Table E1
Coal properties

	Moisture- and ash-free	Ash-free	Moisture-free	As received
Proximate analysis				
Fixed carbon	0.5908	0.5109	0.5400	0.4725
Volatile matter	0.4092	0.3539	0.3741	0.3273
Moisture	0	0.1352	0	0.1250
Ash	0	0	0.0859	0.0752
Total	1.0000	1.0000	1.0000	1.0000
Ultimate analysis				
Carbon	0.8166	0.7062	0.7464	0.6531
Hydrogen	0.0568	0.0642	0.0519	0.0594
Oxygen	0.0983	0.2050	0.0898	0.1896
Nitrogen	0.0171	0.0148	0.0157	0.0137
Sulfur	0.0113	0.0097	0.0103	0.0090
Ash	0	0	0.0859	0.0752
Total	1.0000	1.0000	1.0000	1.0000

Note: Lower Heating Value (LHV) of maf coal = 33.252 MJ/kg, and that of the ar coal = 32.87 MJ/kg.

Nomenclature

A	pre-exponential factor
c_A	concentration of component A
$c_{A,0}$	initial concentration of component A
C	carbon content (maf basis)
E	activation energy for reaction
g	Acceleration due to gravity
k_f	rate constant (f = forward, r = reverse)
k_m	mass related rate constant
$K_{p,T}$	equilibrium constant of a reaction at temperature T
N	number of reaction stages
p	total pressure
p_A	partial pressure of component A
r_f	reaction rate (f = forward, r = reverse)
r_m	mass related reaction rate
R	universal gas constant
t	time
T	temperature
${}^s v_A$	volume fraction of component A in stream s
ε	porosity
η	dynamic viscosity
ν	kinematic viscosity
ρ	density
τ	residence time

This page intentionally left blank

List of Names and Abbreviations

NAMES OF PROCESSES, PLANTS AND COMPANIES

Over the course of time a number of technologies have changed owners or name, to the extent that this book could read like a Russian novel where all the main characters go by at least three names. In order to simplify matters we have used one name consistently throughout this book. In general we have used the current names, but where this could cause confusion, we have used the name more generally associated with the particular technology.

Borsig	A designer of syngas coolers and originally part of the Deutsche Babcock (later Babcock Borsig) Group. The company is now independent and has taken over the syngas cooler designs of Steinmüller, also formerly part of the Babcock Borsig Group.
BGL	The Lurgi rights to the BGL (see page 94ff.) and the Lurgi circulating fluid-bed gasification technologies have been acquired by Allied Resources and its affiliate Envirotherm GmbH. Advantica, as successors to British Gas also has rights on the BGL technology.
Buggenum	Coal-based IGCC built by Demkolec and now owned by Nuon Power.
E-Gas	This technology was originally developed by Dow Chemical, which later grouped its gasification technology assets into Destec Energy Inc. In 1997 Destec was sold to NCG Corporation, which changed its name to Dynergy in 1998. Since purchasing the technology from Dynergy in 1999, Global Energy marketed it under the name of E-Gas. It is now owned and marketed by ConocoPhillips.

GEE	The technology developed by Texaco has been acquired by General Electric and is now marketed under the name of GE Energy (GEE).
Siemens	A gasification process originally known as GSP (Gaskombinat Schwarze Pumpe) and later purchased by Noell. Noell was bought by Babcock Borsig and traded under the name of BBP. This technology was acquired by Future Energy, which in turn was acquired by Siemens in 2006.
SilvaGas	A biomass gasification process originally developed by the Battelle Memorial Institute and now marketed by FERCO under the name of SilvaGas.
Standard Fasel Lentjes	Syngas cooler and HRSG supplier in the Netherlands. Formally Werkspoor, and then Bronswerk.

ABBREVIATIONS

As in any other walk of life, the gasification industry has developed its own jargon and abbreviations. The following lists those abbreviations used in this book.

AGR	acid gas removal
af	ash free
ar	as received
ASU	air separation unit
BCGA	British Compressed Gas Association
BFW	boiler feed water
BGL	British Gas Lurgi
BOD	biological oxygen demand
BS	(1) bituminous solids; (2) British Standard
CAPEX	capital expenditure
CC	combined cycle
CCP	Clean Coal Power R&D Company
CFB	circulating fluid bed
CFD	computational fluid dynamics
CGA	Compressed Gas Association
CGE	cold gas efficiency
CHAT	cascaded humidified air turbine
CHP	combined heat and power
COD	chemical oxygen demand
CSTR	continuously stirred tank reactor
CTL	coal to liquids

CW	cooling water
DEA	di-ethanol amine
DGA	di-glycol amine
DIN	Deutsches Institut für Normung
DIPA	di-isopropyl amine
DMPEG	di-methyl ether of polyethylene glycol
DOE	Department of Energy (USA)
EIGA	European Industrial Gas Association
EOR	enhanced oil recovery
EP	elevated pressure
EPA	Environmental Protection Agency (USA)
EPRI	Electric Power Research Institute
FCC	fluid(ized) catalytic cracking
FICFB	fast internal circulating fluid bed
FT	Fischer-Tropsch (synthesis)
GSP	Gaskombinat Schwarze Pumpe
GTI	Gas Technology Institute
GTL	gas to liquids
HAT	humid air turbine
HHV	higher heating value
HP	high pressure
HRSG	heat recovery steam generator
HTW	high temperature Winkler
HWEP	hot water extraction process
IGCC	integrated gasification combined cycle
IGT	Institute of Gas Technology
ISO	International Standards Organization
KBR	Kellogg Brown and Root
KRW	Kellogg Rust Westinghouse
KT	Koppers Totzek
LHV	lower heating value
LNG	liquid natural gas
LNW	liquid nitrogen wash
LOX	liquid oxygen
LP	low pressure
LPG	liquid petroleum gas
LSTK	lump sum turn key
maf	moisture and ash free
MDEA	methyl di-ethanol amine
MEA	mono-ethanol amine
mf	moisture free
MHF	multiple hearth furnace
MM	million
MP	medium pressure

MPG	multi-purpose gasification
MSW	municipal solid waste
NG	natural gas
NGCC	natural gas combined cycle
NMP	normal methyl pyrrolidone
OPEX	operational expenditure
PC	pulverized coal
PFBC	pressurized fluid bed combustion
PFR	plug flow reactor
POX	partial oxidation
PPU	pre-purification unit
PSA	pressure swing adsorption
PV	photo voltaic
RDF	refuse-derived fuel
RSC	radiant syngas cooler
SAFT	stoichiometric adiabatic flame temperature
SAGD	steam-assisted gravity drainage
SARU	soot-ash removal unit
SCGP	Shell coal gasification process
SCOT	Shell Claus off-gas treatment
SCR	selective catalytic reduction
SGP	Shell gasification process
SMDS	Shell middle distillate synthesis
SNG	Synthetic natural gas, or substitute natural gas
SRU	sulfur recovery unit
TEA	tri-ethanol amine
UCG	underground coal gasification
UVV	Unfallverhütungsvorschriften (German safety regulations)
VOC	volatile organic compounds

Index

A

Acetic Acid Anhydride, 3
Acid Gas Removal (AGR), 328–343
Air Separation Unit (ASU), *See* Oxygen
Alstom boiler, 224
Amines as chemical washes, 332–334
Amisol process, 338
Ammonia, 15, 53, 219, 257–264
  ammonium chloride, 220, 224
  design considerations, 259–262
  economics, 369, 370
  example, 262–264
  market, 258
  production capacity development, 4
  production costs with different feedstocks, 370
  residue-based plant flowchart, 263
  solubility in water, 235
  sulfur compounds in, 259
  syngas specification, 259
  synthesis, 3, 5, 259–264
  water quench and, 219
Anaerobic digestion of biomass, 174
Anthracite, 48–55
  density, 55
  as preferred fuel, 59
Applications, 256–317
  advanced cycles, 298–306
  ammonia, 258–264
  carbon monoxide, 275–278
  chemicals, 257–278
  comparison with combustion, 287–293
  energy storage, 316, 317
  flue gas treatment, 308–315
  gas to liquids, 281–284
  hydrogen, 271–275
  IGCC, *See* Integrated Gasification Combined Cycle
  methanol, 264–270
  oxo-alcohols, 275–278
  power, 286–317
  state-of-the-art IGCC, 236, 293–296
  synfuels, 278–281
  syngas, 30–31
  Synthetic Natural Gas (SNG) from coal, 285, 286
Argon, 325
Arsenic, 243, 381
Ash
  biomass, 70, 71
  chemical composition of, 56–59
  combustion of coal and, 56
  fluid-bed gasifiers and, 107
  fusion temperature and analysis, 56–58
  melting properties, 51, 56–58
  properties, 51, 52
  refinery residue with, 63–66
  slagging behaviour of, 120
  temperature selection and properties of, 22, 23
Atmospheric operation, 206
Autothermal reforming, 5
Availability and Reliability, 374–377, 411–414

B

Bagasse, 76
Bark, 76
Basic data, 17, 18
Batch reactor, 39–41
BGL gasifier, *See* British gas/Lurgi slagging gasifier
BHEL process, 112, 113

Biomass, 75–83
  animal, 77, 78
  coal formation and, 48
  cropping, 79, 80
  defining, 75
  marine cropping, 82, 83
  production, 79, 80
  properties, 76–78
  source of carbon, 83, 398
  vegetable, 76, 79
  waste, 81
Biomass gasification/gasifiers, 163–174
  Choren process, 171, 172
  FICFB process, 169, 170
  Foster Wheeler CFB, 164–165
  fluid-bed processes, 164–170
  High Temperature Winkler, 166
  Lurgi CFB, 164
  Silvagas, 166–169
  TPS process, 165
Bio-oil, 81, 82, 171–173
  plants, 173
  pyrolysis processes, 171–173
  use for, 172
Bitumen, 71
Bituminous coal, 48–55
Black liquor, 78, 79, 178–180
  composition of, 80
  difficulties, 178
  gasification combined cycle (BLGCC), 179
  gasification flow chart, 79
Borsig boiler, 222, 223
Boudouard reaction, 12, 14, 36
  char gasification and, 36, 37
  metal dusting and, 249, 250
  process, 36
Brayton cycle, *See* Joule cycle
British Gas/Lurgi (BGL) slagging gasifier, 5, 101–104, 175
  ash and, 209
  development of, 101
  diagram of, 102
  equipment issues, 101
  Lurgi dry ash versus, 101
  process description, 101
  process performance, 102, 103
  Ruhr 100 versus, 104
  slagging and non-slagging regime, 209
  waste gasification, 103, 104
Browncoal, 48–55
Burners, 145, 215–216, 359
Butane asphalt, 62

C

Caking properties, 54, 55
Calcium, refinery residue with, 62, 65
Candle filter, 224, 225, 346
Carbon, 226
  Conradson, 70
  conversion, 28, 107
  conversion and fluid-bed gasifiers, 107
  gasification footprint for, 24–26
  management, 146–147, 151–154, 157–158
  Ramsbottom, 70
  removal, *See* management
Carbon dioxide
  as moderator, 18
  as transport gas, 197, 198
  as liquid transport medium, 202
  capture/removal, 29, 297, 298, 313
  emissions, 398
  sequestration, 29
Carbon monoxide (CO)
  applications, 275, 276
  design considerations, 277, 278
  example, 278, 279
  market, 275
  plant flowchart, 278
  shift, 13, 262, 348–351
  specifications, 275
Carbona process, 165–166
Carbon oxy sulfide, 15, 351, 352
Carbonyls, 195, 238–241, 351
Carnot cycle/process, 287, 288, 291, 293
CFB, *See* Fluid-bed gasifier, circulating processes
Char, 36, 37
  comparison to solid feedstocks, 38, 39
  effective reactivities, 38, 39
  rate of reaction, 37
Charcoal, 76, 80
Chemrec process, 178, 179, 180

Chlorides
corrosion aspects, 249
refinery residue with, 66
Chlorine
in coal, 53
compounds, 236
detrimental effects of, 53
Choren process, 171, 172
Claus process, 357–363
Clean coal power (CCP) gasifier, 138–140, *See also* MHI gasifier
Clean gas shift, 350
CO shift, 348–351
Low temperature (LT), 350
High temperature (HT), 349, 350
Medium temperature (MT), 350
Raw gas shift, 350, 351
CO shift reaction, 13, 14, 230–231, 348
Coal(s), 18, 47–59, 238
advantages to gasify in power plants, 29, 30
analysis, 50–53
as-received (ar), 18, 54
ash-free (af), 18, 54
biomass gasification versus, 163
bituminous, 48–55
caking and swelling properties, 54, 55
chlorine content, 53
classification of, 48–51
coal data, 18, 48–55
density, 55
drying, 207, 208
footprint, 24–26, 229, 232
formation of, 48
hardness, 55
heating value, 54
historical development of gasification and, 1–6
minimum temperature for gasification of, 163
modelling and, 18
moisture-and-ash-free (maf), 18, 54
moisture-free (mf), 18, 54
other minerals in, 53, 58, 59
percentage gasified, 47
preheat with hot syngas, 112
pressurization of, 195–206
properties, 54, 55
proximate analysis, 50, 51
reaction sequence, 35
reporting analysis basis, 52
reserves by region, 48
sizing, 206, 207
sub-bituminous, 48–55
synthetic natural gas from, 285, 286
to liquids, 284
ultimate analysis, 51–53
Coal gasifiers in waste service, 175
Coal tar, 73
Coal water-slurry feed gasifiers, 120, 122, 127, 128
drying coal and, 207, 208
extreme slurry preheat, 201, 202
pumping coal as a slurry, 199, 202
size reduction of coal and, 206, 207
wet lock hoppers, 203, 204
Cocoa husks, 76
Coconut husks, 76
Coffee, 76
Coke, 11, 33, 59
petroleum, 59, 60, 135
pyrolysis and, 2
Coke oven, 39
development of, 2
reactor design and, 43
Coke oven gas, 75
Cold gas efficiency (CGE), 28–30, 100, 198, 200, 244, 245
Combined Cycle (CC), 193, 291–294, 297, 298, *See also* Integrated gasification combined cycle
Combustion
definition, 1
of volatiles, 34–36
Compression of reactants, 194
Computational fluid dynamics (CFD), 43, 44, 124
Conoco-Philips gasifier, *See* E-gas process
Continuous gasification, 4
Continuously stirred tank reactor (CSTR), 41–43
Conversion factors, 403–407, 409, 410
Copper oxide, 342, 343
Corrosion aspects, 248–250
COS hydrolysis, 351, 352
Cotton residues (gintrash, stalks), 76

Cryogenic processes, 323–326, 354–355
Cyanide, 380, 386
Cyanometallates, 386

D
Dalton equation, 19
Depressurizing, 199
Desulfurization module, 346
Devolatization, 34–35
Dry coal ash, 387
Dry coal feed gasifiers, 56, 124–127
  coal performance in, 126
  diagrams, 96, 106, 123
  gas analysis and, 229
  with lock hoppers, 195–197
  process performance, 125–126
  single-stage, 124–125
  two-stage, 125, 127, 128
Dry solids removal, 224, 225
Dulong formula, 54

E
E-gas process, 121, 137–139, 208, 220
Eagle gasifier, 124, 125, 140, 141, 220
Ebara process, 176, 177
Economics, 369–377
Efficiencies, 28–31
Electricity, *See* Power
Emission conversion factors, 406, 407, 409, 410
Energy storage, 316, 317
Entrained-flow gasifiers, 93, 120–143, 171, 172
  advantages, 121
  ash and, 121, 122
  characteristics, 92, 120–123
  coal usage, 121
  coal water slurry feed gasifiers, 122, 127, 128
  considerations general, 124–128
  description of, 91–93
  dry-coal feed gasifiers, 124–127
  feedstocks and, 47
  high-temperature, 193
  Koppers-Totzek, 4, 5, 128, 130
  lock hoppers, 195–197
  pressure, 193, 194
  process control, 232
  process performance, 125, 126
  reactor complexity, 209–215
  reactor modelling, 223, 224
  reactor outlet temperature, 229–232
  single-stage, 124
  swelling and, 54, 55
  temperature for, 26
  two-stage, 121, 124–126, 137, 138
  up-flow slagging, 209
Environmental issues, 377–389
  gaseous effluents, 377–381
  greenhouse gases, 381–385
  liquid effluents, 385–387
  solid effluents, 387–389
Equations, 19
Equilibrium constants, 240
Eucalyptus, 80

F
Fast internal circulating fluid-bed process (FICFB), 169, 170
Feedstocks, 17, 18, 47–87
  biomass, 75–83
  characteristics, 47–87
  coals, 18, 47, 48
  coke, 47, 59
  density, 55
  heterogeneous nature, 84
  liquid and gaseous, 60–75
  natural gas, 74
  petroleum coke, 59–60
  pour point, 68, 69
  refinery gas, 74, 75
  sizing, 85
  viscosity, 67, 68
  wastes, 85–87
FICFB process, 169, 170
Fischer-Tropsch synthesis, 3, 60, 130, 144, 278–284
  ARGE process, 280, 281
  gas specifications, 259, 266, 267
  Sasol and, 4, 100, 280, 282
  sulfur compounds in, 259
  syngas, 259
  Synthol process, 280, 281
Fischer-Tropsch off-gas, 75
Fixed carbon and proximate analysis, 51, 52

Flash points, 69, 70
Flue gas
  desulfurization, 29, 314
  treatment, 306–315, 377–380
Flue gas recycle, 309, 311–315
Fluid-bed gasifiers, 91, 104–119, 176, 177
  agglomerating processes, 116, 117
  ash, 107
  BHEL process, 112, 113
  bubbling, 106, 107
  carbon conversion, 107
  characteristics, 92
  circulating processes, 113, 114, 164, 166, 176
  common issues, 105
  description of, 104, 105
  development potential, 117–119
  equipment issues, 108
  feed quality, 106, 107
  functions, 104, 105
  high temperature Winkler (HTW) process, 109–112
  HRL process, 112
  insulating brick wall, 211, 212
  melting and, 55–57
  operating temperature, 105, 106
  performance for different feedstocks and blasts, typical, 109
  pressure, 193, 194
  pressurized processes, 166
  processes, 104–119
  reactor complexity, 209–212
  reactor modelling, 108
  regimes diagram, 105
  swelling and, 54, 56
  transport processes, 114–116
  Winkler process, 5, 108, 109
Fluorine, 386
Footprint, *See* Coal footprint
Formic acid, 237, 238
Foster Wheeler circulating fluid-bed process, 164–165
Fuel cells, 315, 316
Fuel nitrogen, 234

G

Gas analysis, 229–232
Gas to liquids (GTL), 281–284
Gas turbine improvements, 298–306
Gaseous effluents, 377–381
Gaseous feedstocks, 60, 144
Gasification
  char, 36–39
  characteristics, 92
  definition, 1
  fluid coke, 60
  future, 397–399
  gaseous feedstocks, 60,144
  historical developments, 1–5
  processes, 91–182
  process safety, 161–163, 389–393
  reactions, 3–5, 12, 13
  temperatures for, 11, 13
  today, 6–9
  website, 17, 401
  worldwide capacity, 6
Gasification based power stations, 28, 29
Gas treating, 328–348
GE energy process, 120, 122, 127, 128, 135–137
  characteristics, 122
  description, 135–137
  development, 135
  diagram of, 136
  equipment issues, 135
  temperature profile, 122
GEE gasification process, 144–148
  carbon management, 146–147
  carbon removal, 146
  description, 145
  development, 144–145
  equipment performance, 147
  flow scheme, 147
  maintenance intervals, 148
  performance, 147, 148
  syngas cooling, 145–146
GEE gasifier, 121
Graphite, 11, 17
Greenhouse gases, 397–399
Ground nut shells, 76

H

HAT cycle, 300, 301
Heat flux measurement, 228
Heat loss calculation at membrane wall, 213–215

Heat recovery steam generator (HRSG), 207, 291, 292, 294–296, 298
Heating value, 18, 48, 49, 52, 54, 62, 76, 82, 85
Heavy metals precipitation, 387, 388
Higher heating value (HHV), formula for, 54
High-temperature Winkler process (HTW), 5, 108, 109, 175, 176
Historical development, 1–6
Hot gas cleanup, 345, 346
HRL process, 112
Humid air turbines (HAT), 300, 301
Hydrocarbons, unsaturated, 236, 237
Hydrogasification, 1, 5, 13, 182
Hydrogen, 271–275
  corrosion aspects, 249
  cyanide, 15, 53, 234–236
  design considerations, 272, 273
  economy, 397
  example, 273–275
  market, 271
  residue based plant flowchart, 273
  specification, 271, 272
  sulfide, 15, 233, 248, 328–343, 345, 346
Hydrogenation and absorption, 360–362

I

ICCT OMB process, 141, 142
IGCC, *See* Integrated gasification combined cycle
In situ gasification, 93, 180, 181
Integrated gasification combined cycle (IGCC), 29, 30, 100, 194, 293–298
  air blown, 246, 247
  applications, 29, 30, 125, 130, 135, 139, 194, 197, 286–316
  carbon dioxide and, 197–199
  carbonyls and, 238–241
  with CO_2 capture, 297, 298
  efficiencies, 297
  efficiencies for entrained-flow gasifiers, 127
  flow schemes, 293–297
  fuel gas expansion, 296
  integration, 294–296
  mercury removal in, 242
  nitrogen and, 295, 296
  power plant flow diagram, 295
  state-of-the-art, 293–297
  temperature profiles, 307, 308
  use of hot syngas, 112, 244, 245
Iron
  molten processes, 181
  refinery residue with, 62, 66
Iron carbonyl, 238–241
Isothermal compression, 299–305, 307, 308
Issues, practical, *See* Practical issues

J

Jacket construction, 213
Joule cycle improvement options, 298–306

K

Kellogg Brown and Root (KBR) gasifier, 114, 116
Kellogg Rust Westinghouse (KRW) gasifier, 117
Kinetics, 33–44
  char gasification, 36–39
  devolatization, 34, 35
  volatiles combustion, 34–36
Koppers-Totzek (KT) gasifier, 4, 5, 128–130
  characteristics, 120
  diagram, 129
  jacket construction and, 213
  process description, 129, 130
  quenching, 217, 218
Krupp-Koppers gasifier, *See* Prenflo

L

Lignite, 48–55
Linde, 4, 323
Liquid effluents, 385, 386
Liquid feedstocks, 60
Liquid nitrogen wash, 260, 354, 355
Liquid organic residue, 62, 63, 86, 87
Liquid oxygen storage, 317
Lo-Cat process, 339, 340
Lock hoppers, dry-coal feeding with, 194
  carbon dioxide and, 197–199
  development of, 195
  diagram, 196

nitrogen and, 197, 198
syngas and, 198, 199
transport gases, 197–199
wet, 203, 204
working of, 195, 196
Lower heating value (LHV), 18
Lurgi circulating fluid-bed process, 114, 115, 164
Lurgi dry-ash gasifier, *See* Sasol-Lurgi dry ash gasifier
Lurgi's multipurpose gasification process (MPG) process, 43, 143, 144, 155–159
carbon management, 157
description of, 157
diagrams of, 156
performance, 158, 159
product gas, 159
waste heat recovery, 157

M
Maize stalk, 76
Marine cropping, 82, 83
Measurement, process, 226–232
gas analysis, 228
heat flux measurement, 228
temperature, gasification, 229–232
temperature control, 228, 229
Membrane systems, 343–345
Membrane wall(s), 212–215
conditions of, 214
heat loss calculations at, 213–215
steam make in, 228
temperature control, 232
Mercury, 241–243, 380–381
Metal dusting, 249, 283
Methanation, 353, 354
Methane
emissions, 385
gas compositions, 27, 28
flow data and gas compositions for methane-fired combined cycle, 310, 311
process control with, 27, 28, 229, 231, 232
Methanol, 264–270
design considerations, 267–269
economics, 369–371
energy storage and, 317
example, 369, 370
hot-regenerated, 336
market, 264, 266
relative consumption by usage, 266
residue-based plant flowchart, 266
as solvent, 334–337
syngas specification, 266, 267
Methanol synthesis, 3, 172, 266–270
MHI gasifier, 125, 138–140
Milling and grinding, 55
Modelling, 16–20
data, basic, 17, 18
deductions from, 20–26
equations, 19
feedstocks, 17, 18
fuel footprint, 24–26
moderator, 18, 19
pressure effect, 20–22
purpose, 16
reactor design applications, 43, 44
surprises in calculations, 26
temperature effect, 22, 23, 24
variables, 20
Moderator, 18, 19
Molecular sieves, 340, 341
Molten iron process, 181
Moving-bed gasifier, 11, 12, 34, 91, 93–104
characteristics, 92
complexity of, 209
counter-current, 33
description, 95–97
Lurgi dry-ash, *See* Sasol Lurgi dry ash gasifier
maintenance of, 99
pressure, 104, 193, 197
producer gas, 93, 94
swelling and, 54, 55
temperature control, 228, 229
temperatures, 95–97, 216
water gas, 94
MTCI gasifier "pulse enhanced" steam reformer, 180
Municipal solid waste (MSW), 175

N
Naphtha soot carbon recovery process, 152

Naphtenic acids, refinery residue with, 66
Natural gas, 4, 5, 74
  oil gasification and partial oxidation of, 5, 143–163
  substitute, 6, 8, 100, 193, 285, 286
Nickel
  carbonyl, 238–241
  refinery residue with, 62
Nitrogen
  compounds in coal, 151–154
  compounds in syngas, 234–236
  effects of compound impurities, 235–236
  emissions, 386
  formation of HCN and NH_3, 234
  refinery residue with, 52, 62
  safety and, 391
  as transport gas, 197, 198
  typical concentrations, 234, 235
Noell process, *See* Siemens SFG process
Norsk hydro vanadium recovery process, 159, 160
NO_x abatement, 296, 297

O
Oil gasification, 143–163, 238
  GEE gasification process, 144–148
  Lurgi's multipurpose gasification process (MPG), 155–159
  new developments, 159–161
  partial oxidation of natural gas and, 143–161
  process automation, 161, 162
  process safety, 161–163
  reactor shell monitoring, 162, 163
  Shell gasification process, 149–155
  Texaco gasification process, *See* GEE gasification process
Optimization, *See* Process conditions
Organic chemical waste, 86
Orimulsion, 71
Oxidant choice, 243–247
  cold gas efficiency and, 244, 245
  deductions, 247
  equipment sizing and gas flow rate, 246
  hot syngas use and, 245, 246
  parasitic power, 246, 247
  temperature and, 245
Oxo-alcohols, 275–278
  design considerations, 277, 278
  example, 278, 279
  market, 275
  plant flowchart, 278
  specifications, 275
Oxygen, 237, 323–328
  choice of oxidant, 243–245
  future developments for, 326, 327
  pipelines, 327, 328
  pressurized production, 325
  safety and, 391–393
  storage of liquid form of, 317
  supply, 323
Oxygen Claus process, 359, 360
Oxygen blown gasifier, 4, 19, 36, 244, 245

P
Palm oil residues (shells, fibred fruit stems), 76
Parasitic power, 246, 247
Partial oxidation, 1, 11
Particulate removal, 224, 225, 308
Peak shaving fuels, 317
Petcoke, *See* Coke, petroleum
Phenosolvan extraction process, 98
Phosphorus, 53
Pipelines, 327, 328
Plasma gasification, 182
Plug flow reactors (PFR), 40, 41
Polygeneration, 258
Pour point, 68, 69
Power, 286–317
  advanced cycles, 298–306
  comparison with combustion, 287, 288, 312–314
  economics, 372–374
  efficiencies, 287, 288, 313
  energy storage, 316, 317
  flow schemes, 289, 292, 295, 297, 302, 309, 316
  flue gas treatment, 306–315
  fuel cells, 315, 316
  fuel gas expansion, 296
  gas cycles and combined cycles, 291–293
  gas turbine improvements, 298–306
  generation, 6

humid air turbines (HAT) cycle, 300, 301
isothermal compression, 299, 300
methanol, 317
options for improving Joule cycle, 298–306
peak shaving fuels, 317
plant integration, 294–296
quasi-isothermal compression, 302, 303
recuperator, 300–306
state-of-the-art IGCC, 293–297
station efficiency and NO_x control, 296, 297
steam cycles, 289–291
supercritical cycles, 287, 288, 313
tophat cycle, 301–306
water cycle, 304, 305
Practical issues, 193–250
burners, 145, 215, 216
coal sizing and drying, 207, 208
corrosion aspects, 248–250
effect of pressure, 193–195
oxidant, choice of, 243–247
particulate removal, 224, 225
pressurization of coal, 195–206
process measurement, 226–232
reactor design, 209–215
synthesis gas cooling, 216–224
trace components of raw synthesis gas, 232–243
Pratt and Whitney Rocketdyne (PWR) gasifier, 142, 143
Prenflo process, 5, 121, 123, 125, 130–132
characteristics, 123
gas quench and, 219
membrane walls and, 131, 212
Pressure
compression of reactants and, 194
effects of, 20–22, 193–195
equipment and, 194
selection of, 20–22
side reactions and, 195
Pressure swing adsorption (PSA), 341, 342, 344, 345
Pressurization of coal, 195–206
Process conditions, optimizing, 26–31
efficiencies, 28, 29
indicators, 27, 28
integrated gasification combined cycle applications, 29, 30
operating point, 28, 29
syngas and hydrogen applications, 30–31
Process control (indicators), 26–31, 161, 163, 232
Process measurement. *See* Measurement, process
Processes, gasification, 91–182
biomass, 163–174
black liquor, 178–180
categories, 91–93
characteristics, 92
entrained-flow gasifiers, 120–143
fluid-bed gasifiers, 104–119
hydrogasification, 182
in situ, 93, 180, 181
molten iron, 181
moving bed gasifiers, 93–104
oil gasification and partial oxidation of natural gas, 143–163
plasma, 81
wastes, 174–177
Producer gas, 3, 93, 94
Propane asphalt, 70
Proximate analysis, 50–52
Purisol process, 337
Pyrolysis
definition, 1, 2
flash, 81
processes, 171–176
reactions, 35, 193
Pyrometers, 227

Q

Quasi-isothermal compression, 302, 303
Quenching, 132, 217–220
chemical, 219, 220
cooling gas by, 132, 146
gas, 132, 219
radiant syngas cooler, 135–137, 218
water, 218, 219

R

Radiant cooler, 135–137, 218
Rate of reaction, 37–39
Reactants, compression of, 194

Reactions, 3–5, 12, 13
Boudouard, 12, 14, 36
char gasification and, 36–39
CO-shift, 12, 14
combustion, 12
heterogeneous, 13
homogeneous, 13
methanation, 12
steam methane reforming, 12
thermodynamic equilibrium, 12–14
water gas, 12
Reactivity, 37–39
Reactor design, 209–215
applications to, 43, 44
containment and heat loss, 210–215
embodiment, 209
heat loss calculations at membrane wall, 213–215
modelling, 43, 44
jacket construction, 213
membrane walls, 210, 212, 213
refractory linings, 210–212
theory, 39–43
Rectisol process, 237, 261, 334–337
Recuperators, 302–304
Refinery gas, 74, 75
Refractory linings, 210–212
Refuse derived fuel (RDF) service, 175
Residues, 60–70
ash content, 62–64
calcium, 62, 65
C/H ratio, 62, 63
chloride, 66
Conradson carbon, 70
density, 62, 69
flash and ignition temperatures, 69, 70
iron, 62, 66
liquid organic, 73
naphtenic acids, 66
nickel, 62, 64, 65
nitrogen content, 62, 63
pour point, 68, 69
requirements, 61
silica, 66
sodium, 62, 65
specifications, 62
sulfur content, 62, 63
tar sands, 71, 72
vanadium, 62, 64
viscosity, 62, 67–69
Rice husks, 76
Rubber, 85
Ruhr 100 gasifier, 104
British gas/Lurgi slagging gasifier versus, 104
lock hoppers and, 195
Sasol-Lurgi dry ash gasifier versus, 104
pressure, 193

S

Safety, 389–393
oxygen, 391–393
reactor shell monitoring, 162, 163
shutdown, 390
spontaneous combustion, 390
start-up, 390
toxic and asphyxiating materials, 391
Salt, 389
Sasol-Lurgi dry-ash gasifier, 4, 5, 12, 33, 94–100
applications, 100
capacity, 95
coal tar and, 73
computational fluid dynamics and, 43, 44, 124
diagram of, 96
equipment issues, 98, 99
gas liquor treatment, 97, 98
patent for, 94
performance data, typical, 99
process description, 95–97
process flowchart diagram, 97
process performance, 99, 100
reactor and, 95, 96, 209, 210
Rectisol process and, 237, 261, 334–337
Ruhr-100 versus, 104
sizes and capacities, 95
slagging to non-slagging regime, 101
temperature and gas composition profiles, 96
Sawdust, 76
Selexol process, 337, 338
Shell coal gasification process (SCGP), 5, 121, 123, 125, 130–132

characteristics, 123
gas quench and, 219
membrane wall and, 131, 210–213
process description, 130–132
process diagram, 131
temperature profile, 123
Shell gasification process (SGP), 143, 149–155
carbon management, 151–154
carbon removal, 149, 151
description, 149
development of, 149
diagrams of, 150, 151
equipment performance, 154
performance with different feedstocks, 148
waste heat recovery, 149, 222, 223
Siemens SFG process, 125, 132–134, 175
burners and, 215, 216
characteristics, 123
jacket construction and, 134, 213
membrane walls and, 133, 210, 212–215
process description, 132–134
quenching, 134, 217
as single-stage dry-coal feed gasifier, 124
temperature profile, 123
Silica, 66
Silicon carbide, 212
SilvaGas process, 168, 169
Slag
analysis, 388
ash and, 57
environmental issues, 387–388
membrane walls and, 210, 212, 213
viscosity-temperature relationship, 56
Slagtap, 56
Sodium, refinery residue with, 62, 65
Softening point of ash, 55
of coal, 54, 55
Solid effluents, 387–388
Solids pumping, 202
Soot
gasification, 160, 161
removal, 151, 155
Soya straw, 76
Spent lubricating oil, 73
Spontaneous combustion, 390
Stamet pump, 202
Steam
cycles, 289–291
as moderator, 18, 19
reforming, 4
supercritical cycles, 290, 291
Straw, 76
Sub-bituminous coal, 48–55
Subdewpoint processes, 362
Substitute natural gas (SNG), 5, 6, 8, 100, 110, 285, 286
Sulfinol solvent, 338
Sulfur
compounds, 233
corrosion aspects and, 248
emissions, 8, 379–380
in coal, 51, 52
recovery, 339, 340, 357–363
Sulfuric acid, 357, 363–365
Suncor, 72
Superclaus, 360
Swelling (index), 54, 55
Syncrude, 72
Synfuels, 278, 280, 281
availability and reliability, 374–377
coal to liquids (CTL), 284
economics, 371–372
gas to liquids (GTL), 281–284
power production, 293–298
substitute natural gas from coal (SNG), 285, 286
Syngas, *See* Synthesis gas
Synthesis gas, 30–31
absorption systems, 330–340
adsorption systems, 340–343
applications for, 257, 258
biomass, 346–348
chemical washes, 332–337
coal preheat with, 112, 218–220
compression, 20, 21
cooler designs, 221–224
coolers, 220–224
cooling, 216–224
cooling in oil service, 222–224
economic boundary conditions, 331
hot gas clean-up, 345, 346
membrane systems, 343–345

optimizing applications, 30–31
oxidative washes, 339, 340
partial oxidation, 1
permeability rates of components of, 344
physical washes, 333–337
physical-chemical washes, 337, 338
purity, 229, 230
quenching, 112, 113, 217–220
radiant cooler, 218
raw gas composition, 329
selection criteria for treating, 329, 330
specifications, 259, 266, 267
temperature and, 22, 23, 24
trace components in raw syngas, 232–243
as transport gas, 198, 199
treating, 328–357
Synthetic natural gas, *See* Substitute natural gas (SNG)

T

Tail gas treatment, 360–363
Tall hoppers for pressurizing, 204–206
Tar sands
processing steps, 72
residues, 71, 72
Temperature(s), 11
control, 228, 229
effect of, 22–26
flash and ignition, 69, 70
fluid (FT), 55–57
gas analysis and calculating gasifier outlet temperature, 228–232
heat flux, 27
hemispherical (HT), 55–57
initial deformation (IDT), 55–57
measurement, 226–228
moderator, 18
oxidant choice and, 244, 245, 323
softening (ST), 54, 55
Texaco coal gasification process, *See* GE energy process
Texaco oil gasification process, *See* GEE gasification process
Thermal NO_x, 305, 306, 309, 380
Thermodynamics of gasification, 11–31
deductions from model, 20–26
definition, 11, 12
equilibrium, 13–15
modelling, 16–20
optimizing process conditions, 26–31
reactions, 12, 13
Tophat cycle, 301–306
applications, 305
efficiency, 305, 306
flow scheme, 301, 302
NO_x control, 305
water cycle, 304, 305
Town gas, 2
TPS process, 165
Trace components in gas, 232–243
arsenic, 243
carbon, 238
carbonyls, 238–241
chlorine, 236
formic acid, 237, 238
mercury, 241–243
nitrogen compounds, 234–236
oxygen, 237
sulfur, 233
unsaturated hydrocarbons, 236, 237
Trace elements in ash, 59
Twin fluid-bed steam gasification, 118, 119, 166–169

U

U-gas gasifiers, 117, 118, 165, 166
Ultimate analysis, 51–53
Underground coal gasification (UCG), 180, 181
Urea, 259

V

Vanadium
in feedstock, 62, 211
recovery process of, 154, 159, 160
refinery residue with, 62, 64
undesirable properties, 64
Variables, process, 20
Volatile matter and proximate analysis, 50, 52

W

Waste(s), 83–87, 103, 115

addition to coal gasifier feed, 103, 175
gasification of, 114, 174–177, 389
heating value, 85, 86
liquid, 86, 87
organic chemicals, 86
plastics, 87
purpose developed processes for, 175–177
solid, 84–86
Water gas, 2, 13, 36, 94
Wet solids removal, 225
Winkler fluid-bed gasifier, 4, 5, 104
atmospheric, 108, 109
diagrams, 110
high temperature, 109–112
process, 108, 109
Wood, 76
ash components in, 77
fixed-bed processes and, 163
historical development of gasification and, 2
WTA drying process, 208

Z

Zinc oxide, 342, 343